00053239

God.
623·873
Bow/Tre
53239.

NOT TO BE ISSUED
OUT OF THE LIBRARY.

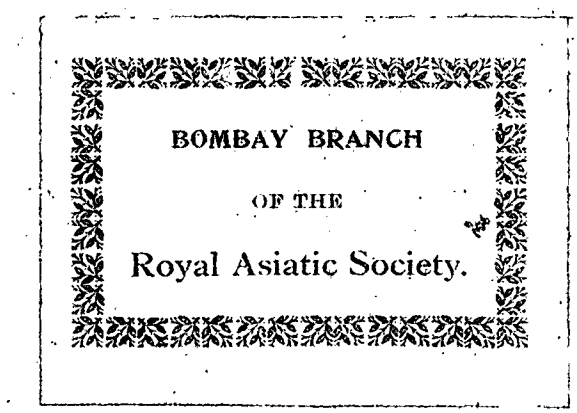

Digitized with financial assistance from the
Government of Maharashtra
on 23 March, 2016

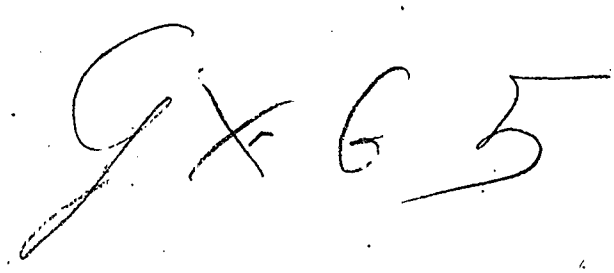

Ex B 5

COMPARATIVE VIEW OF DIRECT ACTING SCREW ENGINES.

To Illustrate the Treatise on the Screw Propeller

BY J. SCOTT RUSSELL, C.E.

WATT

SIMOND — 4 Cylinders — Diam. — 2 Feet. H.P. 80 NOM.

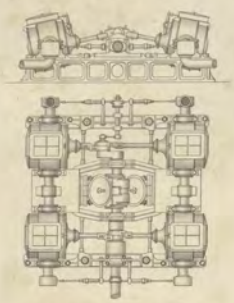

MAUDSLAY

MEDEA — 2 Cylinders — Diam. 2 ft 10 ins. H.P. 80

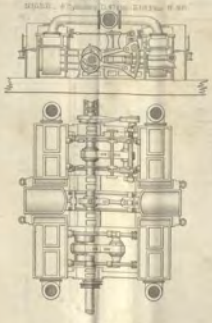

PENN

ARROGANT AND CRUSADER — 2 Cylinders, Diam. 3 ft 6 ins. H.P. 250

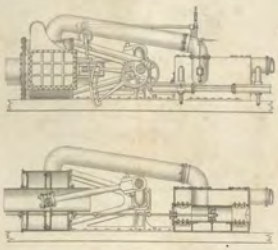

SEAWARD

TIGRESS — 4 Cylinders, Diam. 2 ft 6, Stroke 3 ft. H.P. 80 NOM.

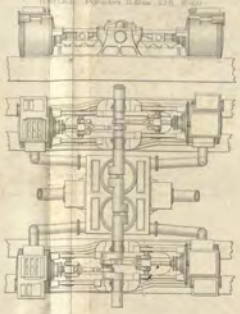

RENNIE

VULCAN, VORTIGERN, SCAMANDER, AND MEDUSA — 4 Cylinders — Diam. 3 ft 6 ins. Stroke 3 ft. H.P. 250 NOM.

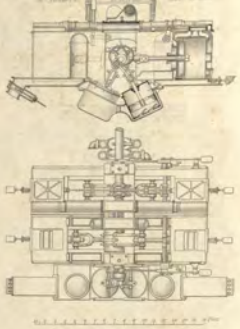

BLYTH

2 Cylinders — Diam. 2 ft 6 ins. Stroke 3 ft. H.P. 80 NOM.

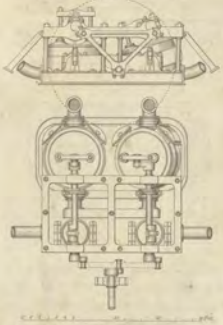

STOTHERT

2 Cylinders, Diam. 4 ft 6 ins. H.P. 200

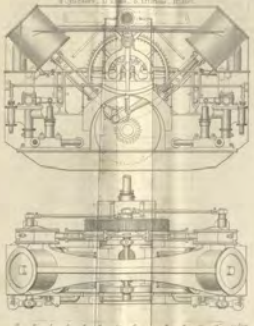

THOMSON

FRANKFORT — 2 Cylinders, Diam. 3 ft 6 ins. H.P. 200

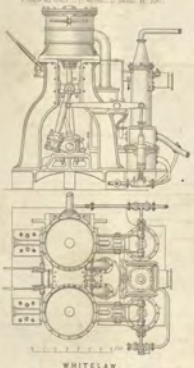

CARLSUND

2 Cylinders — Diam. 3 ft 6 ins. Stroke 3 ft. H.P. 300

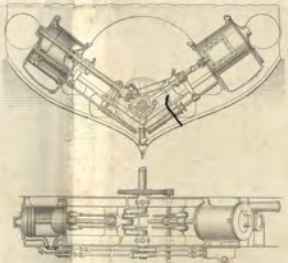

ERICSSON

PROPELLER — Steel Plate Engines

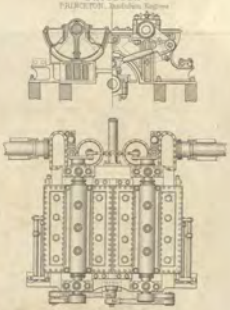

STEELE

ETOILE — 2 Cylinders — Diam. 3 ft 6 ins. Stroke 3 ft. H.P. 80

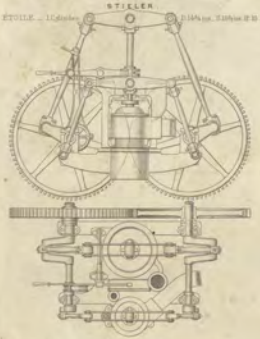

SEAWARD

MINAX — High Pressure — H.P. 80

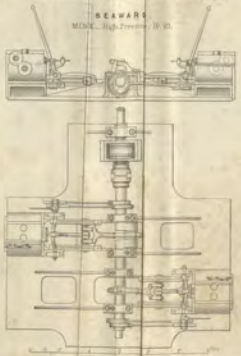

WHITELAW

2 Cylinders — Diam. — Stroke — H.P. 300

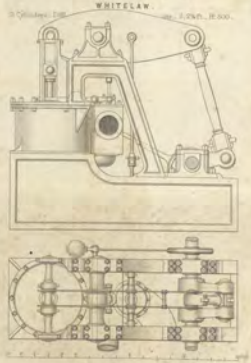

HOLM

PYRENE — 2 Cylinders — Diam. 3 ft 6 ins. Stroke 3 ft. H.P. 300

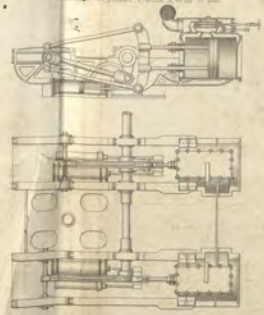

DISC

LOCO ENGINES as improved by ROBERTS and CRAMPTON — H.P. 300 NOM.

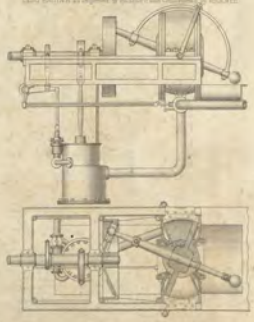

COMPARATIVE VIEW OF GEARED SCREW ENGINES.

To illustrate the Treatise on the Screw Propeller
BY J. BOURNE, C.E.

WATT

MAUDSLAY

MILLER

PENN

NAPIER

RENNIE

MAUDSLAY

MILLER

SEAWARD

NAPIER

TOD & MACGREGOR

SCOTT & SINCLAIR

J. & G. THOMSON. GLASGOW

SMITH & RODGER

MAZALINE

A TREATISE

ON THE

SCREW PROPELLER,

WITH

VARIOUS SUGGESTIONS OF IMPROVEMENT.

53239

BY JOHN BOURNE, C.E.

9 X 6

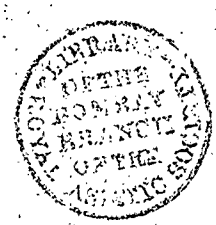

LONDON:
LONGMAN, BROWN, GREEN, AND LONGMANS.
1852.

God
623.873
Bou/Tre
53239

LONDON:
SPOTTISWOODES and SHAW,
New-street-Square.

I INSCRIBE THIS WORK

TO THE MEMORY OF MY FATHER,

THE LATE

CAPTAIN BOURNE, R.N.,

THE ESTABLISHER OF THE PENINSULAR STEAM NAVIGATION COMPANY,

AND THE FIRST CONTRACTOR WITH THE GOVERNMENT

FOR THE CONVEYANCE OF THE MAILS BY STEAM VESSELS ON THE SEA;

TO WHOSE

TALENTS AND ENTERPRIZE

THE ART OF STEAM NAVIGATION IS LARGELY INDEBTED,

And whose Memory

IS HELD IN MOST REVERENCE BY

THOSE BEST ACQUAINTED WITH HIS CHARACTER.

J. BOURNE.

PREFACE.

In this work I have collected the most material of the facts connected with the operation of the screw propeller, so that the reader is, I believe, brought up to the highest point of information yet reached in connexion with that subject. I have not stopped short, however, with the accomplishment of this task; but having perceived that screw vessels, as heretofore constructed, have had weighty and invariable defects, I have proceeded to devise expedients for remedying these defects, and in this endeavour the result I believe will show that I have not been wholly unsuccessful. The most formidable of the imperfections heretofore attaching to screw vessels has been their inability to contend successfully with head winds, without involving a most wasteful expenditure of coal; and this peculiarity unfitted them for carrying important mails to distant countries with advantage, or for performing any similar service where head winds might have to be encountered for a long period of time. If screw vessels, however, be built upon the principles I have recommended, I believe that this defect will be completely remedied; and I further believe that such vessels would be able to proceed against a head wind of such strength that a paddle vessel of equal power would not be able to stem it at all. If my views upon this subject should turn out to be correct, I think it cannot be doubted that an important step in advance in the art of screw propulsion will have been gained by their promulgation.

In the mode of constructing ships, so as to gain more strength with less material, I have offered various suggestions, the force of which every one of the least mechanical aptitude will at once discern; and the wonder will be how it could happen that ships, with the accumulated skill of a thousand generations expended upon them, could continue to be constructed in so unskilful a manner. A ship is weakest in the direction of her length: she is liable to bend in the middle, or to *hog*, as it is technically termed; or she may break in two, which is called breaking her back. To strengthen her in this direction various kinds of straps, trusses, and other palliatives, have been from time to time introduced;

but where the evil should be met is in the deck, and not in the sides, since a ship is, in truth, to be regarded as a hollow beam, of which the deck is the upper edge and the bottom the lower edge. In such a beam it is manifestly the top and bottom which have to endure the strain, the function of the sides being merely to keep the top and bottom in their right positions. It is, therefore, in the top and bottom that the strength must be collected, and by adopting this principle in the construction of ships, more strength will be obtained with less weight.

There are various other suggestions of improvement scattered through the work,— such as for diminishing the friction of ships in the water by lubricating the bottom with air; for correcting the evils of a full bow or stern, by applying a bow and stern of air; for enabling vessels to go closer to the wind, by providing that the impinging wind shall not come in contact with the reflected wind, which last is to pass off through holes or openings in the sail; for enabling the sail to move, to some extent, with the varying pressure of the wind, in order that a more equable pressure may be imparted to the vessel, whereby the speed will be increased; and for accomplishing other important objects which it would occupy too much space to enumerate here. I cannot doubt that the introduction of these improvements into navigation will be productive of important benefits; and it will be a source of much satisfaction to me if it should appear that I have been the means of advancing to a higher perfection that important art on which the well being of the human family so much depends.

JOHN BOURNE.

June 26th, 1852.

SUBJECTS OF CHAPTERS.

CHAPTER I.

HISTORICAL ACCOUNT - - - - - - - - - - Page 1

CHAPTER II.

PRACTICAL INTRODUCTION OF THE SCREW PROPELLER - - - - - 84

CHAPTER III.

SCIENTIFIC PRINCIPLES CONCERNED IN THE OPERATION OF SCREW VESSELS - - - 95

CHAPTER IV.

COMPARATIVE EFFICIENCY OF THE SCREW AND PADDLE AS A PROPELLER - - - 113

CHAPTER V.

COMPARATIVE MERITS OF SCREWS OF DIFFERENT KINDS - - - - - 131

CHAPTER VI.

SCREW VESSELS WITH FULL POWER - - - - - - - 169

CHAPTER VII.

SCREW VESSELS WITH AUXILIARY POWER - - - - - - 180

CHAPTER VIII.

SCREW STEAM VESSELS ON CANALS - - - - - - - 194

CHAPTER IX.

COMPARISON OF DIFFERENT KINDS OF SCREW ENGINES - - - - - 199

CHAPTER X.

DETAILS OF THE CONSTRUCTION OF SCREW ENGINES AND SHIPS - - - - 216

CHAPTER XI.

Page
THE SCREW AND PADDLES COMBINED - - - - - - - 227

CHAPTER XII.

RECAPITULATION OF DOCTRINES AND CONCLUSIONS - - - - - - 236

APPENDIX.

Dimensions of Screw Steam Vessels in Her Majesty's Navy - - - - - i
Performance of Screw Steam Vessels in Her Majesty's Navy - - - - - ii
Explanation of Tables of Dimensions and Performance of Screw Vessels - - - - iv
Results of Experiments made with French Screw Steamer "Pelican" - - - - v
Account of the Performance of United States Screw War Steamer "San Jacinto" - - - xxii
Screw and Paddle Vessels on the Atlantic - - - - - - xxiv
Comparison of the "San Jacinto" and "Saranac" - - - - - - xxviii
Feathering Screws - - - - - - - - - xxix
On the Introduction and progressive Increase of Screw Propulsion in Her Majesty's Navy - - xxxii
Wooden and Iron Steamers - - - - - - - - xxxiii
Specification of the Auxiliary Screw Steamer "Water Witch" - - - - - xxxix

LIST OF PLATES.

Plate

I. Dynamometer Diagrams taken in the "Rattler."

II. Indicator Diagrams taken during the Experiments between the "Rattler" and "Alecto."

III. Engines of H. M. Screw Steam Yacht "Fairy" and French Mail Screw Steam Packet "Faon."

IV. Engines of H. M. Screw Steam Packet "Plumper."

V. Engines and Boilers of Screw Steam Ship "Great Britain."

VI. Engines of the Screw Steam Yacht "Fire Queen."

VII. Engines of the Screw Steam Yacht "Fire Queen."

VIII. Engines of the Screw Steam Ships "City of Glasgow," "City of Manchester" and "Glasgow."

IX. Engines of the Auxiliary Screw Steam Vessel "Correo."

X. Engines and Details of the American War Steamer "Princeton."

XI. French Screw Steam Frigate "Pomone" of 46 guns.

XII. Engines of H. M. Screw Steam Ship "Amphion."

XIII. Sections, Plan and Engines of H. M. Screw Steamer "Wasp."

XIV. Vertical and horizontal Sections of H. M. Screw Steam Ship "Ajax."

XV. Lines of H. M. Screw Steam Yacht "Fairy," and of the French Mail Screw Steam Packet "Faon."

XVI. Lines of Screw Steam Yacht "Fire Queen" and French Screw Steam Packets "Biche" and "Sentinelle."

XVII. Lines of the Screw Steamers "European" and "Frankfort."

XVIII. Lines of the Screw Steamers "Rattler" and "Great Britain."

XIX. Comparative View of geared Screw Engines.

XX. Comparative View of direct acting Screw Engines.

ERRATA.

In some of the copies which have been issued the following errors have been discovered, and which the reader is requested to correct.

Page	line	
26.	13.	For "level" read "bevel."
41.	9.& 10.	For "Hayes" read "Hays."
44.	28.	For "Hayes" read "Hays."
45.	20.	For "screw in the box" read "screw in a box."
55.	4 & 6.	For "stern" read "stem."
79.	35. & 36.	For "Pole" read "Poole."
82.	34.	For "Waddell" read "others."
91.	35.	For "4515 tons and 360 horse power" read "1515 tons and 360 horse power."
94.	8.	For "recollections" read "recollection."
99.	6.	For "at" read "as."
117.	31.	For "slips" read "slip."
129.	13.	For "31·81" read "31·88."
129.	23.	For "24·44" read "24·24."
130.	1.	For "41·89" read "42·77."
130.	15.	Dele "out."
131.	26.	For "5 feet 1 inch" read "5 feet 8 inches."
132.	34.	For "centre than at circumference" read "circumference than at centre."
133.	3.	For "Figure 174." read "Figure 175."
133.	6.	For "Figure 175." read "Figure 174."
138.	1.	For "decrepancy" read "discrepancy."
139.	35.	For "2017 mètres" read "2033 mètres."
139.	36.	For "6615·76 feet" read "6669·88 feet."
144.	27.	For "immerse section" read "immersed section."
144.	37.	For "109·69" read "109·79."
155.	3.	For $\left(\frac{\frac{1}{p}-1}{r}\right)^{n^2}$ read $\left(\frac{\frac{1}{p}-5}{r}\right)^{n^2}$
161.	16.	For "9·5 knots per hour" read "1 mètre per second."
163.	18.	For "great" read "greater."
168.	3.	The word "screw" is left out.
iii. of Appendix,		head of last column, for "(Displacement)" read "(Displacement) ⅔."
v. of Appendix,		head of second column, for "Directions" read "Directrices."

*** The scales of some of the engines in the Plate of "Geared Screw Engines" have been misplaced, as will be obvious by referring to the diameter of cylinder and length of stroke, by the numbers representing which the error may be corrected.

DIRECTIONS TO THE BINDER.

The first 18 Plates to be placed at the end of the work, and Plates XIX. and XX. to be placed as Frontispiece Plates at the beginning.

A TREATISE

ON

THE SCREW PROPELLER.

CHAPTER I.

HISTORICAL ACCOUNT.

I PROPOSE to devote this Chapter to the recapitulation of the various projects which have been propounded at different times for propelling vessels by means of a screw. I shall endeavour to trace, so far as now seems practicable or useful, the earlier history of this contrivance, and shall also inquire to whom, among the various inventors whose works pass under review, the practical realization of the idea of screw propulsion is properly attributable. Successful invention generally implies the existence of two distinct kinds of merit. The one lies in the conception or discovery of eligible expedients of improvement; the other lies mainly in the diligence and persistency necessary to remedy the crudities of a first essay, to dispel the doubts of the unbelieving, and to overcome the inertia by which new projects are obstructed. The latter species of merit has, in most cases, the largest claim upon the public admiration, for its successes are both more difficult and more rare than those of mere abstract invention; and since it is only from the practical realization of a mechanical idea that any advantage to the public is obtained, and since also the rights of inventors rest upon reciprocity of advantage between themselves and the public, it is clear that the validity of patents should only be recognised where a public benefit has been conferred. In *those* cases, however, the recognition of a valid title should be prompt and unequivocal, nor should any alternative condition be permitted between that of a title past question and that of no title at all.

The screw propeller is, in all probability, a very ancient contrivance. In China it is said to have been known for ages; but in European countries the idea of a screw propeller appears to have been derived either from the windmill or smoke-jack, or from the screw of Archimedes,—an instrument much used in some countries for raising water. The windmill and smoke-jack appear to be both ancient contrivances. In the 77th proposition of Hero's

"Spiritalia," a work written 130 years before the Christian era, a windmill, of a construction similar to those now in use, is represented as applied to blow an organ, the air being forced into the air-chest of the organ by means of a cylinder and plunger or piston, worked by the windmill. In the East the windmill was used in ancient times for raising water for purposes of irrigation. Christie, in his account of Seistan, a district lying to the east of Persia, and watered by the Helmund, says, "The country, though now only inhabited by Afghans and Beloochees in felt tents, still bears the marks of former civilisation and opulence; and there are ruins of villages, forts, and windmills along the whole route, from Rodbar to Dooshak." Seistan is celebrated as the ordinary residence of Rustum, of romantic celebrity among the Persians. It was conquered in 1383 by Tamerlane, who exterminated the inhabitants, and reduced the towns to ruins.*

The smoke-jack is substantially a small windmill, driven by the current of air or smoke ascending a chimney. Chimneys are supposed by some persons to be a comparatively modern invention, and to have been introduced into this country about the reign of Elizabeth. But this opinion is certainly erroneous; for houses built long before the time of Elizabeth, and furnished with chimneys, which are manifestly part of the original structure, may still be met with at Southampton and elsewhere. In Coningsburg Castle, in Yorkshire, supposed to have been built by W. de Warrein in the year 1070, a chimney of very excellent construction occurs, and this chimney is so built up in the castle walls that it could not have been a subsequent addition. In the houses of the Greeks and Romans, chimneys appear to have been but little used; and in Spain, Barbary, and throughout a large part of the East, chimneys are but little used in the ordinary class of houses at the present day,—a fire being seldom needed for purposes of warmth, and the operations of cookery being, for the most part, performed by means of an open charcoal fire. Nevertheless, in some of the houses of the Greeks and Romans, chimneys did exist, and references to these chimneys may be found in ancient authors. The *hypocausta*, or stoves, by which the superior class of houses were warmed in cold weather, had necessarily chimneys; the furnaces of the baths had also chimneys, as had also the *camini*, or metallurgic furnaces, from which the word chimney appears to have been derived. Houses in which wood was burnt must necessarily have had chimneys of some kind to let out the smoke, and in ancient times large quantities of fire-wood were sold at Rome. And where chimneys existed, the introduction of a small windmill into them to take advantage of the upward current of air, was too obvious an expedient not to have been attempted at a very early period, though at what time the application was first made there is now no means of ascertaining. The chimneys of the ancients were for the most part of imperfect construction, and the houses were consequently smoky. The best kind of fire-wood was scorched before being exposed for sale.

There appears very little doubt that windmills were in use among the Romans, as

* See Thornton's Gazetteer of the Countries adjacent to India. Allen & Co., 1844.

affirmed by Pomponius Sabinus; and by an old Bohemian chronicle* it appears that no mills but windmills were in use in that country before 718, at which time a watermill was first introduced. The knowledge of the windmill was probably brought into Western Europe by the Crusaders; and soon after the Crusades began, charters were granted to parties in France and England authorising the construction of windmills. In Holland, windmills were largely introduced for draining the land; and in order to make them available with every wind, they were set upon floats, which could be turned round, so that the sails would face the wind from whatever quarter it came. Subsequently other expedients were adopted for the accomplishment of this object, some of which are still employed.

It is now pretty certain that boats propelled by paddle-wheels moved by oxen were used both by the Carthaginians and the Romans; and in 1543, Blasco de Garay, a Spanish sea-captain, appears to have succeeded in giving motion to wheels of this kind by means of steam, though the arrangements he adopted are unknown, and no practical benefit resulted. In 1618, and again in 1630, David Ramsey obtained patents in this country for methods of making vessels go against wind and tide. In 1632, Thomas Grent obtained a patent for enabling becalmed ships to make a speedy passage; and in 1637, Francis Lin obtained a patent for "drawing and working up barges and other vessels" without the aid of horses. In 1661, the Marquis of Worcester obtained a patent for a species of vessel which would ascend a rapid in a river, by rendering available the force of the stream for the upward propulsion of the vessel; and in the same year a patent was granted to Thomas Toogood and James Hayes for the propulsion of vessels by forcing water out through the bottom. Papin, Savery, Allen, Hulls, and others, subsequently proposed a variety of arrangements for propelling vessels by a steam engine giving motion to paddle-wheels, and this object became readily accomplishable so soon as Mr. Watt's improvements upon the steam engine enabled a rotatory motion to be obtained from it with advantage.

ROBERT HOOKE. Born, 1635; Died, $170\frac{2}{3}$.

A windmill with four vanes is substantially a screw with four threads†, and as a windmill is an ancient contrivance, a screw must also be so, only that in the case of a

* Wenceslai Hagecii Chronic. Bohem. Translated into German by John Sandel. Nuremberg, 1697.

† Ferguson, in his "Lectures on Select Subjects," delivered about a century ago, explains that the vanes of windmills must have a twist, "causing all the ribs of the vane to lie in different planes;" and this twist, he explains, should be regulated "according to the different velocities from the axis to the extremity of the vane," so that the same angular velocity would be generated, upon whatever part of the vane the wind was made to impinge. The same explanation, of the considerations regulating the twist of the vanes, is given by previous mathematical writers, and vanes made upon this principle would constitute portions of a true screw. But in the practical rules given by Smeaton and other engineers for setting out windmill vanes, the vanes do not form portions of a true screw. If the arm of a screw of 35 ft. pitch, be divided in the direction of its length into six equal parts, and the pitch be taken near the centre, at the circumference, and at the four intermediate positions, it will be found to be 35 ft. at each point; but if the arm of a windmill made according to Smeaton's rules be similarly divided, the pitch at the circumference will be $23\frac{1}{2}$ ft., at the next point 35 ft., at the next

windmill the arms work in air instead of in water. The idea of making a screw on the plan of a windmill, to work in water, appears to have originated with Robert Hooke, one of the most remarkable men this country has ever produced. In a work, entitled "Philosophical Collections," printed for Richard Chiswell, printer to the Royal Society, 1681, there is a paper by Hooke on Horizontal Windmills, containing, as all his papers do, many valuable suggestions on various subjects. Hooke says that he does not believe horizontal windmills to be as good as vertical windmills; but that if horizontal windmills are in any case employed, it will be advisable to adopt a form which he suggests, as preferable to any heretofore recommended, and which is represented in *fig.* 1. Hooke says that there are certain first principles common to the sails both of windmills and ships, which it is important should not be transgressed, if an efficient performance is required; and of these the first is, that the vane or sail upon which the wind impinges shall be, as far as possible, a perfect plane, without any bellying, bunting, or curvity, such as is often to be met with in the sails of ships, and which nautical men commonly reckon as an advantage. The second of these first principles is, that the air shall have as many passages between the parts of the vane or sail as can conveniently be provided, so that the moving air may impinge on the surface of the sail freely, without being obstructed or intercepted by stagnant air in front of it. The third of these first principles is, that the plane of the vane or sail shall be put in the middle inclination, between the way of the wind and the way of the arm, or that of the body of the ship. It will be seen from the figure, that the wooden vanes of this horizontal windmill turn upon a centre, in the same manner as the feathering floats of modern padble-wheels. The motion of these vanes or floats is governed by means of gearing; but Hooke says that this is not the best expedient for the purpose, and that he has only introduced toothed wheels into the diagram, because their action is readily compre-

Fig. 1.

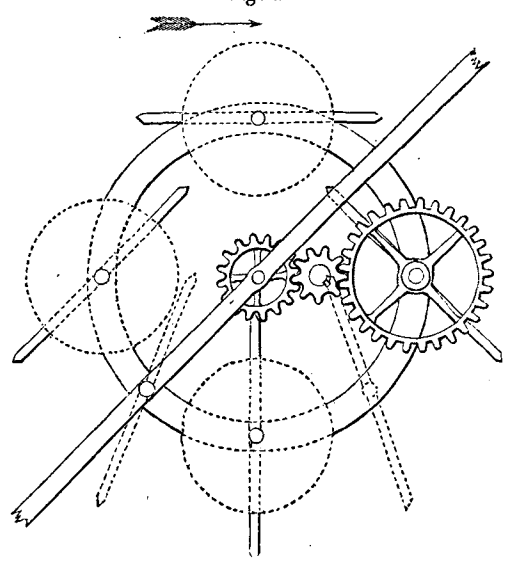

HOOKE'S FEATHERING-WHEEL.

point 35 ft., at the next point 30 ft. 9 in., at the next point 21½ ft., and at the point nearest to the centre 10 ft. The purpose of this deviation from the form of a true screw, in setting out the vanes, is to accomplish certain practical objects, of which one is, that in consequence of the elasticity of the arm, it would be warped out of the form of a true screw by the pressure of the wind, if made of the form of a true screw at first; and it is therefore made of such a shape, that the form approaches more nearly to that of a true screw when the wind is passing through the vanes. Near the centre of the arms the wind imparts but little rotative force, so that a deviation from the true screw form there is not of importance, and the pitch is reduced very much near the centre, to keep the vanes clear of the tower in which the windmill revolves, to adjust them to the lower velocity of the wind due to the obstruction presented by the tower, and to obviate the necessity of any great overhang of the windmill shaft.

hended. While, however, Hooke disapproves of the substitution of this horizontal windmill for the vertical windmill commonly employed, he thinks the expedient "may be of great use for watermills in rivers where there can no dam be made, as may also the perpendicular vanes of other mills; which," he adds, "I thought also not inconvenient to mention by-the-bye, neither of them being so much as hinted by any person whatever that I have hitherto heard of."

In this rapid outline we have all the main features, both of the screw propeller and feathering-wheel, in their most efficient form. For no screw propeller is more efficient than a screw with four arms, like the vanes of a windmill; and, in the best feathering-wheels, the plane of the float-board passing through the water is put in the middle inclination, between the way of the arm and the way of the stream, as Hooke recommends should be done. In these arrangements, it is true, the water drives the screw or paddle-wheel, instead of being driven by it; but it is obvious that the one problem is just the reciprocal of the other, and the same considerations which make the arrangements proposed eligible in the one case, also make them eligible in the other. *Fig.* 1. is copied from a woodcut given in the "Philosophical Collections;" *fig.* 2. represents a paddle-wheel constructed on Hooke's prin-

Fig. 2.

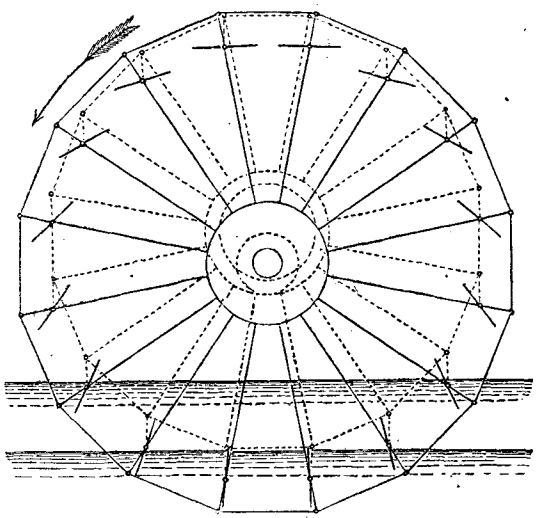

FEATHERING PADDLE-WHEEL.

Fig. 3.

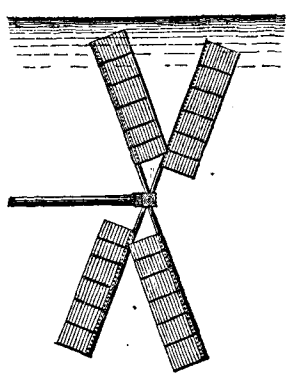

HOOKE'S FOUR-BLADED SCREW.

ciple, and which is identical in all material points with that known as Oldham's paddle-wheel; and *fig.* 3. represents a screw of the windmill form, operating in water, after the manner that Hooke proposed.

On the 14th November, 1683, Hooke showed to the Royal Society an instrument he had invented for measuring the velocity of the wind. It consisted of four vanes, like the vanes of a windmill, set upon an axis, and made very light and easy of motion. The vanes were so contrived, that they could be set at any slope or angle that was desired, and the *rate* of the instrument could be thereby varied so as to enable any adjustments to be made that

were requisite to give exact indications. This instrument was tried in the long gallery in Gresham College, and its operation was found to be satisfactory. On the 28th November, 1683, Hooke showed to the Royal Society an instrument he had contrived and shown to some of the members twenty years before, by which the way of a ship through the water, or the velocity of a river, could be measured. This instrument, of which the most essential part was a screw turned by the water, was designed, not merely to keep an account of the distance run, but also of the amount of lee-way under all the tackings of the ship. Only the vane or fly of the instrument was shown to the Society, and it appears to have constituted the original of the patent or Massey's log, now coming into use; but Hooke's instrument was more perfect than the present patent logs, as it took cognizance of the lee-way. Hooke had also, it is understood, discovered a method of enabling his log to take cognizance of ocean currents, which no existing instrument can do; and he is also said to have discovered a method of constructing an instrument capable of tracing upon a map or sheet of paper the course of a carriage on a road, whatever windings it might make: but these, with many of his other inventions, are now lost. The plan of making gearing in steps, as is done in nearly all screw vessels in which gearing is employed, is an invention of Hooke's, as is also the revolving pendulum, the universal joint, the application of the balance-spring to watches, and numberless other inventions of great originality and importance. He also appears to have been the first person who arrived at just ideas touching the nature of combustion, and his doctrines Lavoisier only revived; he traced the phenomena of the tides to the attraction of the moon, and had a clear apprehension of the universality of the principle of attraction, and the important part it plays in the system of the universe; he predicted that the earth would be found to be flattened at the poles, and that the rate of clocks would be found different near the poles from the rate near the equator. In optics, geology, and most other departments of physics, he made important discoveries or suggestions; and many of the ideas which Newton worked out, were previously entertained by Hooke, though Newton appears also to have arrived at them by an independent process.

Much misconception still exists regarding the manner of propelling and guiding the galleys of the ancients. It appears, from the account given by Suidas, that they had sometimes a rudder at each end, so that they might be propelled either way without difficulty; and Athenæus, in his Fifth Book, says that Ptolemy Philopator's great ship was "biprora et bipuppis," or, in other words, a twin vessel. Hooke, in a very interesting lecture on the method of rowing the ancient galleys, delivered in July, 1684, propounds the following opinions:—

First, that the oars used by the ancients were very much like the oars used by us, but broader and flatter, shorter and lighter, and managed only by one or two. Secondly, that they were moved, not vibrating backwards and forwards as ours now are, but inwards and outwards, so that the action rather resembled sculling than rowing. Thirdly, that they did not lie horizontal as ours do, but almost perpendicular; and when aground, the oars served as legs or props to sustain the vessel. Fourthly, that they were not lifted out of the water, but always remained immersed. Fifthly, that they always promoted the vessel, whether they

were moved outwards or inwards; and sixthly, that the rowers did seldom sit with their faces to the poop of the vessel, but sometimes with their faces toward the prow, and for the most part with their faces outwards and forwards. He also mentions in what way he considers the rowers must have been distributed, and concludes that, in the larger vessels, there must have been considerable overhang of the sides to enable the several tiers of rowers to work simultaneously. The rowers, by a sculling action, moved their oars altogether, either outward or inward, and, by this mode of propulsion, great velocity of motion might, it was considered, be attained. In modern boats with horizontal oars, the action resembles that of a paddle-wheel; whereas, in the ancient galleys, the sculling action more resembled that of a screw, which is, in effect, a continuous sculling machine, in which the necessity of a reciprocating movement is superseded, by giving a complete revolution to the propelling blade.*

LEUPOLD. 1724.

Leupold, in his "Theatrum Machinarum," gives drawings of several arrangements of Archimedian screws driven by windmills for raising water from low lands. *Figs.* 4. and 5.

Fig. 4.

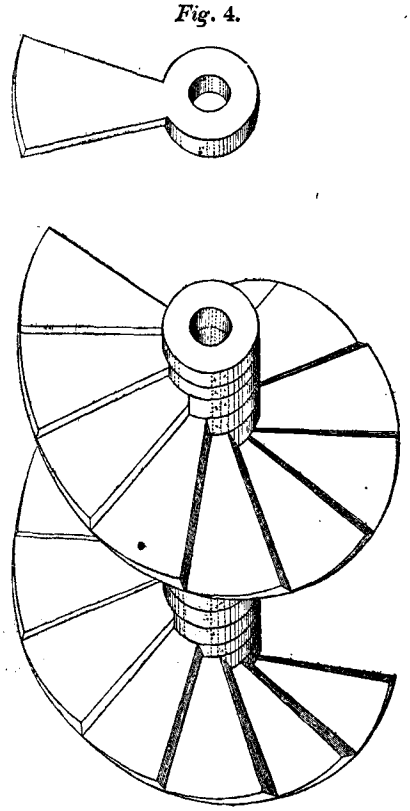

ARCHIMEDIAN SCREW OF ONE THREAD.

Fig. 5.

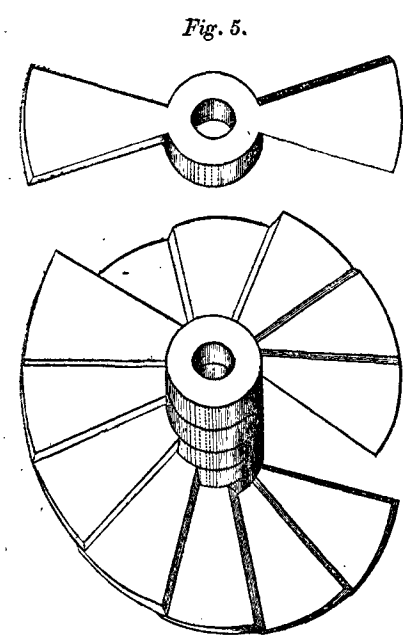

ARCHIMEDIAN SCREW OF TWO THREADS.

are copied from this work; *fig.* 4. being a portion of an Archimedian screw with a single thread, and *fig.* 5. a portion of an Archimedian screw with a double thread. The upper

* See Waller's Posthumous Works of Robert Hooke, p. 569. London. Folio, 1705.

portion of *fig.* 5. bears a near resemblance to a screw propeller such as is now commonly employed. These screws are termed "water snakes" in Holland. The existence of this species of screw is probably traceable to a much higher antiquity than the time of Archimedes, though it is now commonly called by his name.

DU QUET. 1731.

In the "Recueil de Machines approuvées par l'Academie," tome i., there is an account of an arrangement of revolving oars, invented by M. Du Quet, in which four oars set in an arbor are made to revolve like a paddle-wheel, and the emerging float is feathered by being turned edgeways to the water in its ascent. This plan was tried at Marseilles in 1693, by order of Louis XIV., and was also tried at Havre. It was said to give better results than the oars of a common galley, and was approved by the Academy in 1702, but has never been found to be of any utility in practice. In the "Recueil de Machines approuvées par l'Academie depuis 1727 jusqu'au 1731," another contrivance by Du Quet is given for dragging vessels up against a stream, by means of a screw, or helical feather, which is

Fig. 6.

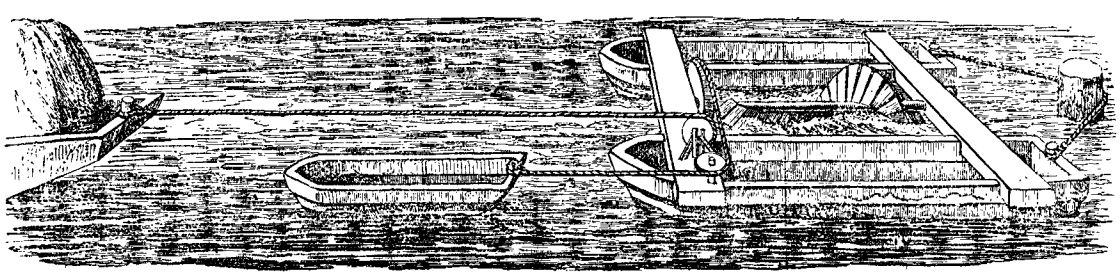

DU QUET'S MACHINE FOR DRAWING UP VESSELS AGAINST A CURRENT.

turned round by the water. This contrivance is represented in *fig.* 6., and it is obviously very inferior in efficacy to the previous project of Hooke, in which a four-bladed screw, resembling the vanes of a windmill, is completely immerged in the running water, instead of dipping superficially, in the manner of Du Quet's machine.

DANIEL BERNOUILLI. 1752.

In 1752, Daniel Bernouilli obtained the prize offered by the French Academy of Sciences for the best project for impelling vessels without the aid of wind. He proposed to employ inclined planes, acting obliquely upon the water, as in the ancient galleys, but those planes were to move circularly, like the vanes of a windmill. The advantages of the sculling mode of propelling, as practised by the ancients, had previously been pointed out by Hooke, as well as the efficiency of vanes, like those of a windmill, working in water; and Bernouilli proposed to apply two or three wheels with inclined paddles, resembling the vanes of a windmill, on each side of a vessel, and two more at the stern. These wheels, or

screws, were to be about 6 ft. in diameter, they were to be completely immerged in the water, and were to be moved either by steam engines or by horses.

W. EMERSON. 1754.

Wheels impelled by the gravity of water acting upon oblique vanes, set in a conical casing, have been long used in France under the name of Danaïdes, or *roues à poires*, and such wheels are described by Belidor in his "Architecture Hydraulique." The base of the cone was set uppermost, and the water entered at the base and escaped at the apex, — acting during its descent upon oblique division plates, which in some cases were plane surfaces, and in other cases spiral, or screw formed. In some cases the gravitating water was made to act upon a helix, or screw, set vertically in a cylinder; and Emerson, in his "Principles of Mechanics," gives a drawing of an arrangement of this kind, from which *fig.* 7. is copied. Emerson says, "The arbor and its leaf may be cut altogether out of the solid trunk of a tree; or else, the leaf may be made of pieces of boards nailed to several supporters of wood, which are to be let, everywhere, into holes made in the body of the arbor, so that they may stand perpendicular to its surface, and all set in a spiral. And the spiral is made on this consideration: that for every 10 inches in the circumference of the axis you must rise 7 inches in the length. *But at the top it will be better to rise faster, so as to have its surface almost perpendicular to the stream.*"* We have here a very distinct enunciation of the principle of the expanding pitch, though, from the imperfect manner in which the screw is drawn in the figure, no visible increase of the pitch at the top is there exhibited. The principle, however, is so definite, and is so distinctly stated, that it does not need a figure to make it understood.

Fig. 7.

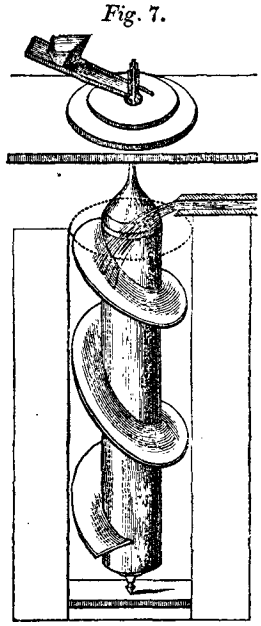

EMERSON'S SCREW, WITH INCREASING PITCH.

M. PAUCTON. 1768.

In a work on the Archimedian screw, by M. Paucton, published at Paris in 1768, the employment of a screw is proposed for propelling vessels. It is suggested that a ptérophore, composed of the circumvolution of the thread of a screw round a cylinder, should be placed on each side of the vessel, or one only at the fore part, and it is stated that these ptérophores, or screws, may be either wholly immersed, or up to the axis only. A screw is also proposed for measuring the velocity of vessels, in the manner now done by Massey's log: but this idea had been propounded by Hooke nearly a century before.

* See Emerson's Principles of Mechanics, p. 258.

D. BUSHNELL. 1776.

In 1776, a submarine vessel was invented by D. Bushnell, an American, which was to be raised upwards, or sunk downwards, in the water, by a screw affixed to the top of the vessel; and moved backward or forward by another screw affixed to the bow,—a rudder being placed at the stern to guide the vessel in any direction. This vessel was to carry a powder magazine, which could be screwed to the bottom of an enemy's ship; and a time-piece, in connexion with the magazine, was to fire the powder after the lapse of any time that was desired. This contrivance, which displays much ingenuity, was not found to be manageable in practice.

JOSEPH BRAMAH. 1785.

On the 9th May, 1785, Joseph Bramah, of Piccadilly, engine maker, enrolled a patent for various improvements in machinery, among which are described two new modes of propelling vessels through the water. The first of these contrivances consists in the application of a paddle-wheel to the stern of a vessel, which paddle-wheel is to be driven by a steam engine,—the rudder being placed in the bow, instead of the stern, to facilitate this adaptation. The second contrivance consists in the application to the stern of the vessel of " a wheel with inclined fans or wings, similar to the fly of a smoke-jack, or the vertical sails of a windmill. This wheel may be fixed on the spindle c (of the rotatory engine) alone (that is, without intermediate gearing), and may be wholly under water, where it would, by being turned round either way, cause the ship to be forced backwards or forwards, as the inclination of the fans or wings will act as oars with equal force both ways, and their power will be in proportion to the size and velocity of the wheel, allowing the fans to have a proper inclination." Bramah explains, that where the engine shaft passes through the vessel, it is to be made tight by a stuffing-box, of which he gives a drawing; but he does

Fig. 8.

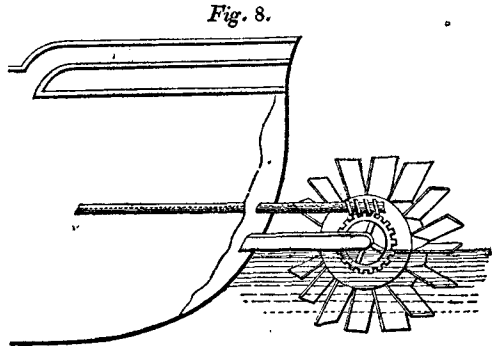

BRAMAH'S ARRANGEMENT FOR PROPELLING BY A PADDLE-WHEEL AT THE STERN.

Fig. 9.

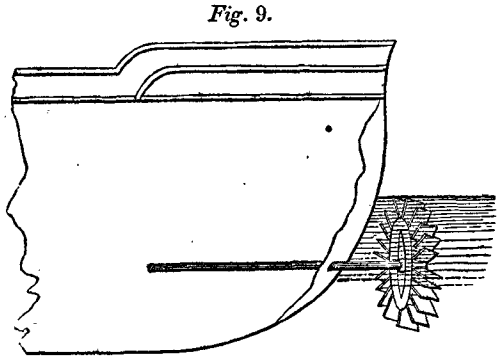

BRAMAH'S ARRANGEMENT FOR PROPELLING BY A SCREW AT THE STERN.

not give any drawing of his screw vanes, and *fig.* 9. is therefore constructed from the modification he describes as necessary to be made upon his drawing of the paddle-wheel,

given in *fig.* 8., to represent the arrangement proper for the submerged propeller. The material parts of Bramah's plan are anticipated by the previous suggestions of Hulls, Bernouilli, and others; but his general arrangement for fixing a screw at the stern, "in or about the place where the rudder is usually placed," to be worked by a shaft proceeding direct from the engine, though vaguely described, is very judicious, and is such as would be perfectly successful if now carried into practice. There is no evidence to show that Bramah ever made, or tried, a propeller of this kind, and his rotatory engine, by which it was to be driven, turned out a failure.

WILLIAM LYTTLETON. 1794.

On the 11th November, 1794, William Lyttleton, of Goodman's Fields, Middlesex, merchant, enrolled a patent for an instrument which he called the "Aquatic Propeller," by which vessels were to be forced through the water. This propeller consisted of three helical feathers wound on a cylinder, as represented in *figs.* 10. and 11., and these cylinders were

Figs. 10. and 11.

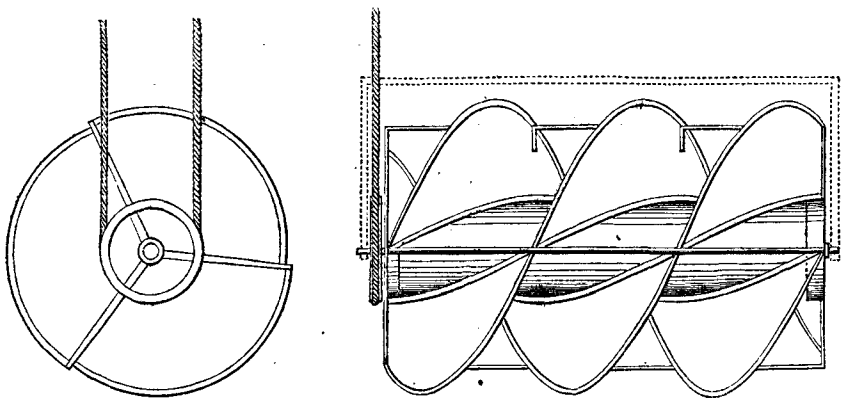

LYTTLETON'S SCREW PROPELLER.

to be so fixed at the bow and stern, or at the sides, as to be immerged in the water, and to carry the vessel forward when put into revolution. Each cylinder, or screw, was to be turned by an endless rope, working in a sheave. An experiment was made with this screw by Lyttleton, in a boat in the Greenland Dock, and was witnessed by Colonel Beaufoy; but the effect was less than was expected, — the speed realised being only about two miles an hour. The invention was said to have been brought from China, from whence Lyttleton, who was a merchant, may have derived it.

EDWARD SHORTER. 1800.

On the 1st March, 1800, Edward Shorter, of St. Giles'-in-the-Fields, Middlesex, mechanic, enrolled a patent for propelling vessels by various expedients, among which, is

one which he terms a "Perpetual Sculling Machine," which consists of a screw of two or more blades, similar to the sails of a windmill, and which is to be immerged in the water, so that by being turned round by the capstan, or other appropriate machinery, it will propel the vessel. Shorter did not propose to give motion to his screw by a shaft passing through the vessel; but a spar was to proceed from any convenient part of the stern of the vessel obliquely downwards, until its end dipped into the water, and on the end of the spar, which was prevented from dipping too far by a buoy attached to it, the screw was to be fixed. The spar being put into revolution, carried the screw round with it, and a universal joint, on Hooke's construction, was to be interposed at the head of the spar, so as to enable it to retain its oblique direction, though turned round by a horizontal shaft. The arrangement proposed by Shorter is shown in *fig.* 12.; and he states that, by pulling

Fig. 12.

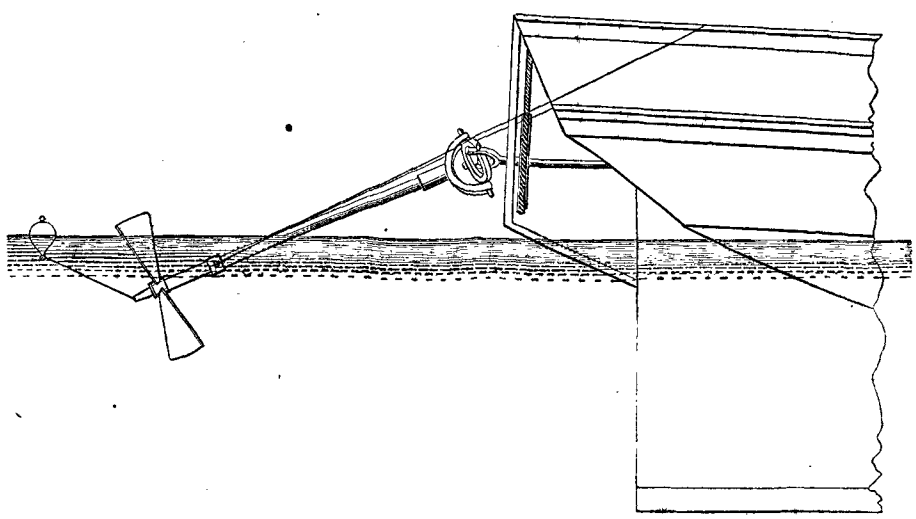

SHORTER'S SCREW PROPELLER.

the guy ropes to the right or left of the spar, the ship may be steered by the influence of the screw. The principal object Shorter appears to have had in view, was to enable large vessels to be moved slowly in calms by the exertions of the crew; and he probably felt, that a shaft passing though the vessel below the water would have been considered objectionable, at that time, for the attainment of an occasional benefit. But he mentions also, that his propeller may be driven by a steam engine, and in that case it might have been kept in operation continually. Shorter applied one of his screws to the Doncaster transport, in 1802, and the result was considered very satisfactory; as, with eight men at the capstan, the vessel, though deeply laden, was propelled at the rate of $1\frac{1}{2}$ mile an hour. It appears probable that the propeller employed in this case had only a single arm. Mr. David Napier, who inspected Shorter's models many years ago, found that he had screws of one, two, three, and four blades, and that he contemplated their application at the bow,

in the dead wood, and at the sides of the vessel, as might appear preferable in each particular case.

M. DALLERY. 1803.

On the 23rd March, 1803, the citizen Dallery took a brevet of invention in France for an improved propeller. In his arrangement, a screw of two convolutions is applied to a vessel at the bow, and another similar screw is applied at the stern. The diameter of each screw swells larger in the middle of its length, and the length is equal to twice the pitch. There is no evidence to show that this project was ever practically tried, and its mechanical details are very crude and inartificial. The screws are turned by endless ropes, and the stern screw is affixed to the rudder, and moves therewith.

JOHN C. STEVENS. 1804.

In the year 1804, an attempt was made by John Cox Stevens, an American, to realise Bramah's idea of propelling a vessel by means of a submerged propeller at the stern, formed in the manner of a windmill or smoke-jack, and driven by a rotatory engine. The rotatory engine was not found successful, and it was superseded by one of Watt's engines, when the vessel attained a velocity of four miles an hour. Stevens began his experiments in steam navigation in 1791; and, during a part of the time, he was assisted by Livingstone, who was afterwards Fulton's coadjutor in introducing vessels propelled by paddle-wheels. But his experiments upon the screw do not appear to have been considered satisfactory, as, after several trials, the project was abandoned. Part of this bad success may have arisen from a deficiency of steam, as the boiler was a tubular one, of a new construction and small dimensions. For a short distance Stevens could make his boat go at a speed of seven or eight miles an hour, and the only material impediment to the maintenance of that speed would be a deficiency of steam.

HENRY JAMES. 1811.

On the 26th March, 1811, a patent was taken out by Henry James for improvements in the mode of navigating vessels. The chief object of these improvements was to enable vessels to be propelled upon canals, without inconveniently extending the width of the vessel; and the first arrangement specified is a paddle-wheel acting at the stern. But an alternative expedient is afterwards described as follows:—"The oars, paddles, or propelling boards, instead of being made as before described, and revolving or turning in the direction of the lengthways of the boat or vessel, may be made like to the sails of a windmill or smoke-jack, pressing obliquely against the water, somewhat upon the principle of what watermen or sailors call sculling."

RICHARD TREVITHICK. 1815.

On the 21st November, 1815, a patent was enrolled by Richard Trevithick, of Cambrone, Cornwall, engineer, for certain improvements in the high-pressure engine, and in its applications to useful purposes, in which a mode of propelling vessels by a worm, or screw, is comprehended. The screw is to consist of a number of leaves, placed obliquely around an axis, like the vanes of a windmill or smoke-jack, and is to revolve with great speed, having its axis in the same line as that in which the vessel moves. The obliquity of the thread of the screw, it is stated, admits of considerable variety, according to the velocity given to it, and speed required; but, as a general rule, the thread of the screw at its outer edge is to make with the axis an angle of 30 degrees. The worm or screw "is in some cases to revolve in a fixed cylinder, in others to revolve together with the cylinder, similar to the screw of Archimedes; but generally to revolve in the water, without any cylinder surrounding it. This worm or screw may be made to revolve in the water at the head of the ship, boat, or other vessel, or at the stern; or one or more worms may revolve on each side of the vessel, as may most conveniently suit the peculiar navigation in which the ship, boat, or vessel is to be employed. In some cases, when the screw is to work at the head of a ship, it is to be made buoyant, and move on a universal joint at the end of an axle turning in the bow of the ship, in order that the screw may accommodate itself to the unevenness of the waves." There is no expedient of propulsion in this patent, of any utility, which had not previously been suggested.

ROBERTSON BUCHANAN. 1816.

In 1816, there appeared "A Practical Treatise on Propelling Vessels by Steam, by Robertson Buchanan, Civil Engineer, Glasgow," in which work the following passage occurs at page 68. "Experiments have been made on a kind of screw; but this, I believe, after a trial on a considerable scale in America, was rejected. Some mechanics, however, still think favourably of it, and suppose that if a screw of only one revolution were used, it would be better than where a longer thread is employed." Subsequent experience has shown that this anticipation of the benefit of restricting the length of the screw is founded upon just views.

JOHN MILLINGTON. 1816.

On the 31st July, 1816, a patent was enrolled by John Millington, of Hammersmith, civil engineer, for an improved method of propelling vessels by the use of a screw, or by forcing air out at the stern, or by the two methods combined, where great speed is required. The arms of the screw are to resemble the vanes or sails of a windmill, and the patentee states, that he has found "that two vanes, each extending to about a quadrant of a circle,

produce a greater effect than any other number." These vanes are to be made "to shift on their pivots or points of attachment, so as to alter the angle which they make with the plane of their motion from 45 degrees to any greater or lesser angle, according to the speed with which they are moved, or the velocity wanted to be communicated to the vessel. The use of moveable vanes had previously been introduced by Hooke in his screw vanes for measuring the velocity of the wind; and the shaft which, in Millington's arrangement, carries the screw, is to have a Hooke's, or universal joint, at the point where it emerges from the vessel, to the end that it may be lowered to any depth in the water that may be required, or raised out of the water if necessary,—its immersion being regulated by a rope hanging from the bowsprit, or from a projecting beam in the situation of the bowsprit, the end of which rope is attached to a loose collar on the shaft. Guide-ropes are also applied to each side of the shaft, in order that the screw may be pulled sideways to the right or left, and the vessel may be steered, or assisted in the steerage, thereby. The upper end of the shaft, carrying the screw, is to rise just above the water line; and, at that level, a short shaft is to pass through the ship, the hole being made water-tight by means of a stuffing-box encircling a short horizontal shaft, at the inner end of which, as well as the outer, there is to be a universal joint, which will prevent the machinery from being incommoded by any working of the ship. This arrangement is shown in *fig.* 13. Millington says, that the screw may

Fig. 13.

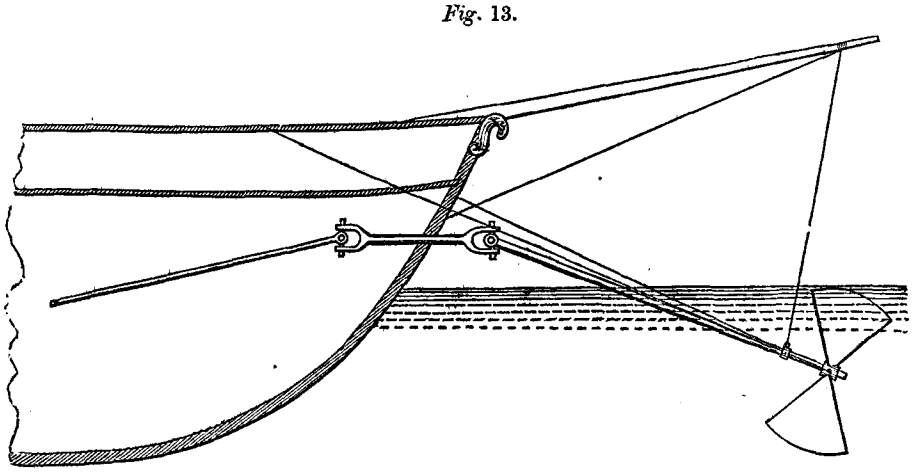

MILLINGTON'S SCREW PROPELLER.

either be worked by horses, or by a steam engine, and that he proposes to apply it "either at the head or stern of the vessel, or at both of them at the same time."

CAPTAIN DELISLE. 1823.

In the month of June, 1823, Captain Delisle, of the French Engineers, presented to the Minister of Marine a memoir on a mode of propelling vessels by means of a submerged screw, resembling some of those previously proposed; but the central part of the screw was

cut away, in the manner shown in *figs.* 14. and 15., and the helical surface was disposed around the outside of the circle, somewhat in the manner adopted in Lyttleton's arrangement; but five threads were employed instead of three, and the length of the screw was only equal to a fifth of the pitch. This arrangement of the helical surface, in the case of windmills, had previously been suggested by Ferguson, in his lectures on Natural Philosophy. He says, "As the ends of the sails nearest the axis cannot move with the same velocity that the tips or farthest ends do, although the wind acts equally strong upon them, perhaps a better position than that of stretching them along the arms, directly from the centre of motion, might be to have them set perpendicularly across the further ends of the arms, and there adjusted, lengthways, to the proper angle. For, in that case, both ends of the sails would move with the same velocity, and, being farther from the centre of motion, they would have so much the more power; and then there would be no occasion for having them so large as they are generally made, which would render them lighter, and, consequently, there would be so much the less friction on the thick neck of the axle, where it turns in the wall."*

Fig. 14. *Fig.* 15.

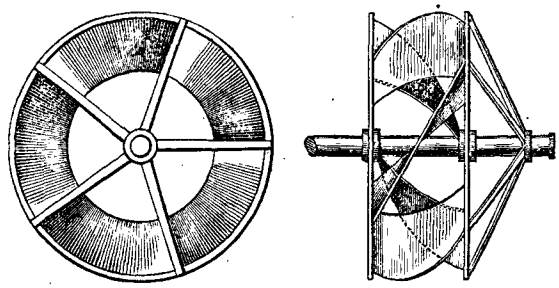

DELISLE'S SCREW PROPELLER.

Delisle's memoir, addressed to the Minister of Marine, led to no result, and was completely forgotten; but, lately, it has been raked up by the French Government, to furnish a pretext for an evasion of Ericsson's patent in France, where it has been largely adopted. If the French Government had acted upon Delisle's representations,—if they had built vessels, instituted experiments, and taken the other steps necessary to perfect the system of screw propulsion, and to bring it into practical use, there might be, at least, a plausibility in their pretensions. But on what principle of equity can they expect to reap the reward of successes, in the realisation of which they had no part whatever, and which they, manifestly, deemed of hopeless attainment, since they refused to sanction any expenditure to enable them to be achieved? Before the time of Delisle, propellers shaped like windmill sails had frequently been proposed, and it had been explained by Emerson and others that, in windmill sails, "the tangents of the angles ought to be nearly as the distances from the centre;" or, in other words, that the sails of a windmill should have such a twist as nearly to constitute them portions of a screw,—though, indeed, windmill sails have been made with such a twist from a remote antiquity. The use of helical surfaces for propelling, therefore, was not new in 1823, nor was the idea new of disposing these surfaces circumferentially; but the practical adaptation of the screw as an effectual propeller had not at that time been accomplished, and this adaptation and introduction of the screw Delisle did nothing to promote.

* Ferguson's Lectures on Select Subjects, p. 84. London, 1776.

M. MARESTIER. 1824.

In 1824, a memoir, by M. Marestier, on the steam vessels of America, was published by the direction of the French Government, and arrangements for the propulsion of a vessel by a screw of several convolutions, are there exhibited. In one of these arrangements the bottom of the vessel is raised upwards, in an arch, from stem to stern, and in this arch a screw, or helix, nearly of the length of the vessel, is placed. In another arrangement, two helical feathers are placed in the central channel of a twin boat, and these helical feathers or screws are turned in opposite directions by means of gearing.

M. BOURDON. 1824.

In 1824, a brevet of invention was taken out, in France, by M. Bourdon, an engineer in that country, for propelling vessels by means of a screw, and this screw was to be made with an expanding or increasing pitch. A company was formed to carry out M. Bourdon's invention, and it was introduced into a steam vessel on the Rhone, but was subsequently abandoned.

JACOB PERKINS. 1825.

On the 9th February, 1825, Jacob Perkins, of London, engineer, enrolled a patent for an improved method of propelling vessels, the general arrangement of which is shown in *fig.* 16. At the stern of the vessel is placed two blades, or arms, resembling the vanes of a windmill, and these double blades are placed one before the other, and are only partially immersed in the water. Each blade has an angle of 45 degrees with the shaft at the centre, and 22½ degrees at the circumference, and the obliquities run in opposite directions, — the one in the manner of a right-hand screw, and the other in the manner of a left-hand screw. The shaft of the pair of blades next the vessel is hollow, and the shaft of the other pair passes through it; and each pair of blades is turned in opposite directions by appropriate mechanism. The object of this arrangement is to keep the vessel steady, and to neutralize any propensity which one pair of blades, or one screw, might have to turn the vessel round. The blades are hung in a frame, which may be raised or lowered to suit the varying immersions of the ship. On the 2nd July, 1829, Perkins obtained another patent, for improvements on the foregoing; in

Fig. 16.

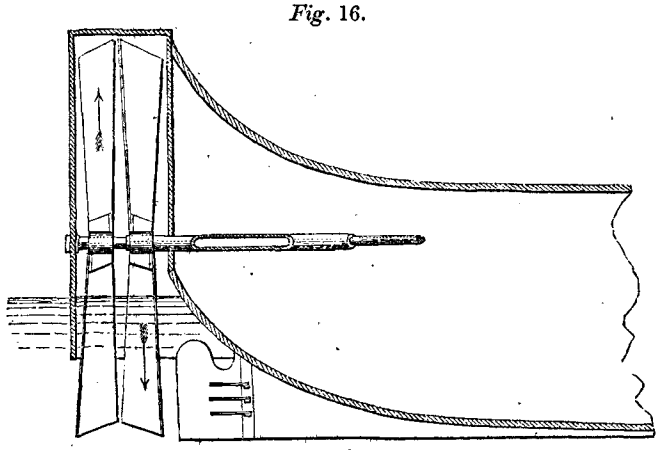

PERKINS' PROPELLER.

which he placed one propeller-wheel over each side of the vessel, the shafts running obliquely forward, and meeting at an angle of 45 degrees in the middle of the deck. Some experiments upon a vessel, propelled upon this plan, are recorded in the Journal of the Franklin Institute, and the result appears to have been satisfactory.

SAMUEL BROWN. 1825.

In the year 1825, a company, which had been formed for carrying into operation Mr. Samuel Brown's project of a gas vacuum engine, offered a reward of 100 guineas for the best suggestion for propelling vessels without paddle-wheels, and the reward was gained by Mr. Samuel Brown, who proposed to accomplish the desired object by a screw, placed in the bow of the vessel. The company having determined to carry out this idea, a vessel was built and fitted with a screw; and, with this vessel, a speed of six or seven miles an hour is said to have been attained. The project of the application of a screw, however, having been subsidiary to the introduction of the gas vacuum engine, and the gas vacuum engine having failed, the screw participated in the discredit of the miscarriage: the company was broken up, and the scheme was abandoned.

THOMAS TREDGOLD. 1827.

In the first edition of Tredgold's "Treatise on the Steam Engine," published in 1827, some remarks are made upon the screw as a propeller for steam vessels; and it is related that a screw, working in a cylinder, had been proposed by Mr. Scott, of Ormiston, and that two screws, working in opposite directions, had been tried by Mr. Whytock, as mentioned in Brewster's "Philosophical Journal," vol. ii. p. 39. Tredgold goes into a mathematical investigation to show the impropriety of using screws of many convolutions, — a doctrine previously suggested by Buchanan; and he also indicates, as Emerson before had done, the benefit of making screws with an expanding or increasing pitch. He says, "A second revolution, at the same angle, could have very little action, because the water would have acquired all the velocity the spiral could communicate. If it be continued, therefore, it should be made with a decreasing angle."

CHARLES CUMMEROW. 1829.

On the 10th June, 1829, a patent was enrolled by Charles Cummerow, of Lawrence Pountney Lane, London, merchant, for improvements in propelling, communicated by a foreigner residing abroad. These improvements consist of a variety of arrangements for applying a screw in the propulsion of vessels, and the screw is to have a single thread of one circumvolution, the proportion of the pitch to the diameter being as one to two. In the case of sea-going vessels, the screw is to be fixed at the stern, in the manner suggested by Bramah and other preceding inventors; but the rudder, instead of being fixed to the bow or set before the screw, is to be fixed to a false stern-post abaft the screw, which false

stern-post is to be connected to the ship by appropriate frame-work. The propeller shaft, where it passes through the ship, is to be encircled by a stuffing-box, which is to be kept tight by means of tallow. The specification of this patent is very illiterate and obscure, having been apparently drawn up by a foreigner imperfectly acquainted with English; and it is full of mis-spelled words and unintelligible phrases, which sometimes make it difficult to determine the meaning. The general arrangement, however, is shown in *figs.* 17, 18,

Figs. 17, 18, and 19.

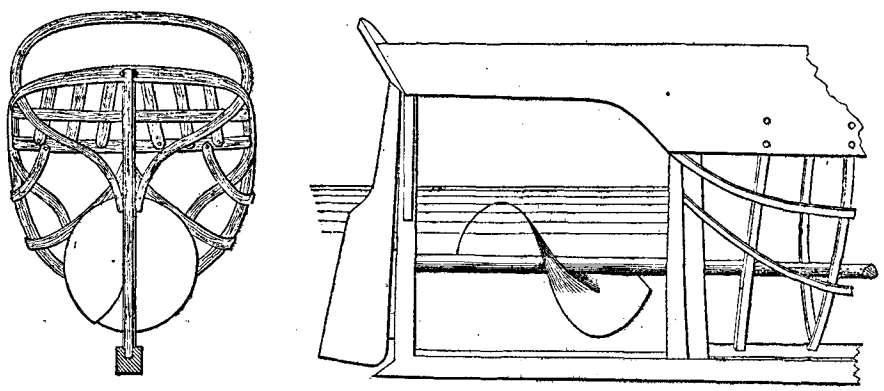

CUMMEROW'S PROPELLER.

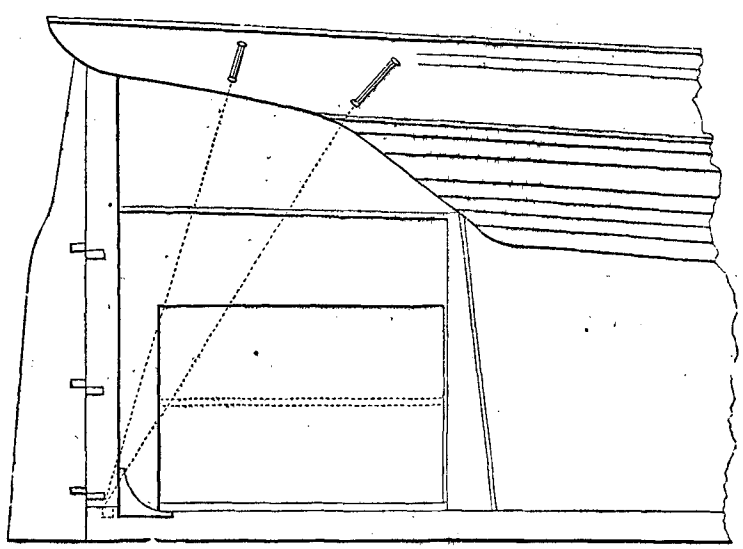

CUMMEROW'S PROPELLER.

and 19., and the only novelty is in placing the screw in a framework built on to the ship, to the end of which framework a rudder is affixed.

WILLIAM CHURCH. 1829.

On the 15th October, 1829, a patent was taken out by William Church, of Haywood House, near Birmingham, for improvements in the mode of propelling vessels. These

improvements consist in the use of two wheels, *figs.* 20. and 21., revolving in opposite directions, as previously proposed by Perkins; but instead of two blades being attached to each shaft, a number of bent paddles, placed upon cylindrical rings, were to be employed, in the manner proposed by Delisle. These bent paddles were to be set in opposite directions, and might be placed within a fixed cylinder. Church does not say whether his propeller was to be placed at the bow or stern, or whether it was to be totally or only partially immerged, or whether it was to be a helix or any other curve; and the different views given of the propeller do not correspond.

Fig. 20. *Fig.* 21.

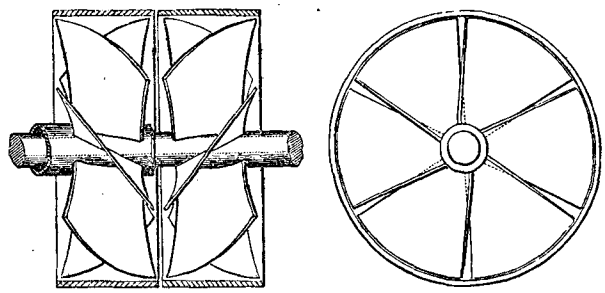

CHURCH'S PROPELLER.

M. SALICHON. 1831.

On the 21st June, 1831, a brevet of invention was taken out in France, by M. Salichon, an engineer, for "a new system of navigation, in which one may make use of every kind of screw." He says, the screw which he proposes to employ is the common one, "invented by Architas 400 years before our era;" and he describes the mode of applying it in the bow of the vessel, where it is to be driven by a shaft passing through a stuffing-box, in the manner previously adopted by Sir Samuel Brown; or it may be applied in the stern, in the manner suggested by Bramah and other inventors.

BENNET WOODCROFT. 1832.

On the 20th September, 1832, a patent was enrolled by Bennet Woodcroft, of Manchester, printer, for "improvements in the construction and adaptation of a revolving spiral paddle, for propelling boats and other vessels on water." In the drawings accompanying this specification, of which a specimen is given in *figs.* 22, 23, and

Fig. 22.

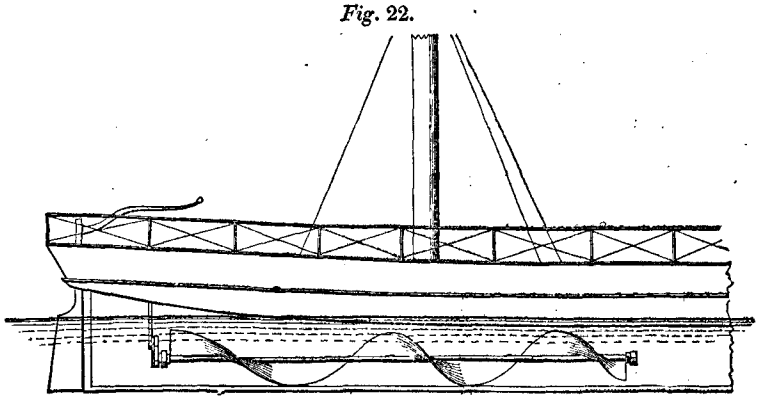

WOODCROFT'S PROPELLER.

Fig. 23.

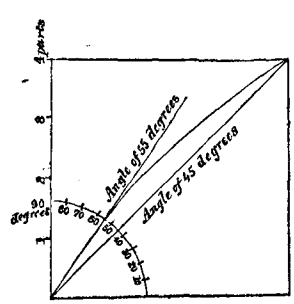

MODE OF SETTING OUT THE SCREW.

24., various screws, of several convolutions, are represented as applied to the stern and sides of a ship; but the main feature of the arrangement is, that the spiral feather shall be coiled round the shaft, or supporting cylinder, "in such form, that the angle of inclination which the worm makes with the axis of the cylinder continually decreases, and the pitch or distance between the coils or revolutions of the spiral continually increases, throughout the whole length of the shaft or cylinder." This is the principle of the expanding or varying pitch,—enunciated long before by Emerson, introduced into practice in France, by Bourdon, in 1824, and recommended for adoption by Tredgold, in England, in 1827; so that this principle was not a novelty at the time Woodcroft's patent was taken out.

Fig. 24.

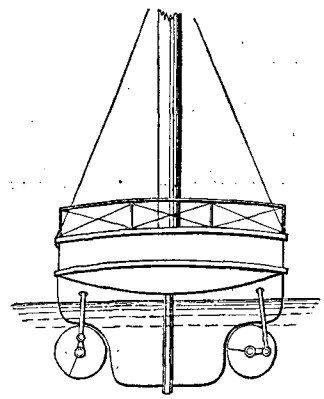

WOODCROFT'S PROPELLER.

WILLIAM HALE. 1836.

On the 22nd March, 1836, as also in 1827 and 1830, patents were taken out by William Hale, of Greenwich, civil engineer, for a method of propelling vessels by forcing water out at the stern, and, in some of the arrangements, a screw acting within the vessel was employed to force out the water; but, as this screw only acted in the manner of a pump, the plan can scarcely be comprehended among expedients for screw propelling. This method of propelling had been proposed nearly two centuries before by Toogood, and had been tried by Rumsey, an American, in 1788, and subsequently by Linaker, Lilley and Frazer, and others, but without success; owing, probably, to the dimensions of the discharging orifice being too small, which caused a waste of power by slip. One of the arrangements proposed by Hale, is shown in *fig.* 25.

Fig. 25.

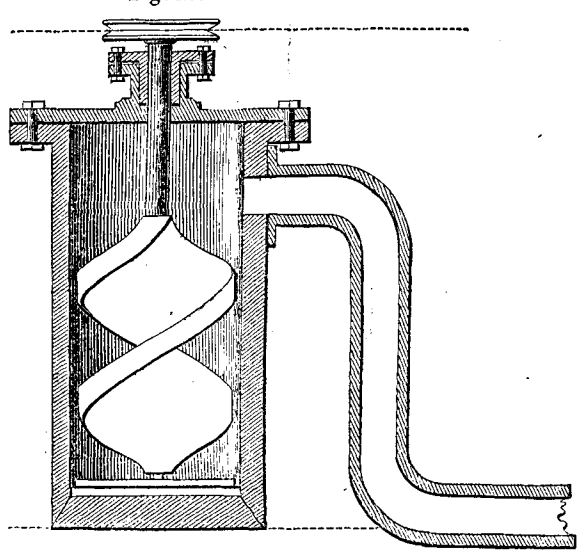

HALE'S METHOD OF PROPELLING.

FRANCIS PETTIT SMITH. 1836.

On the 31st May, 1836, a patent was taken out by Francis Pettit Smith, of Hendon, in the county of Middlesex, farmer, for an improved propeller for steam and other vessels, which improved propeller is stated "to consist in a sort of screw or worm, made to revolve rapidly

under water, in a recess or open space formed in that part of the after part of the vessel commonly called the dead rising or dead wood of the run." In the drawings accompanying the specification, a screw of a single thread, and of more than one convolution, is represented; but it is stated that a screw of not more than one thread may be employed, and that the threads may have any required angle with the shaft of the propeller. The patentee claims the use of screws, "whether arranged singly, or in an open space in the dead wood, as here shown (*figs.* 26, 27, 28, and 29.), or in duplicate, with one on each side of the dead

Figs. 26. and 27.

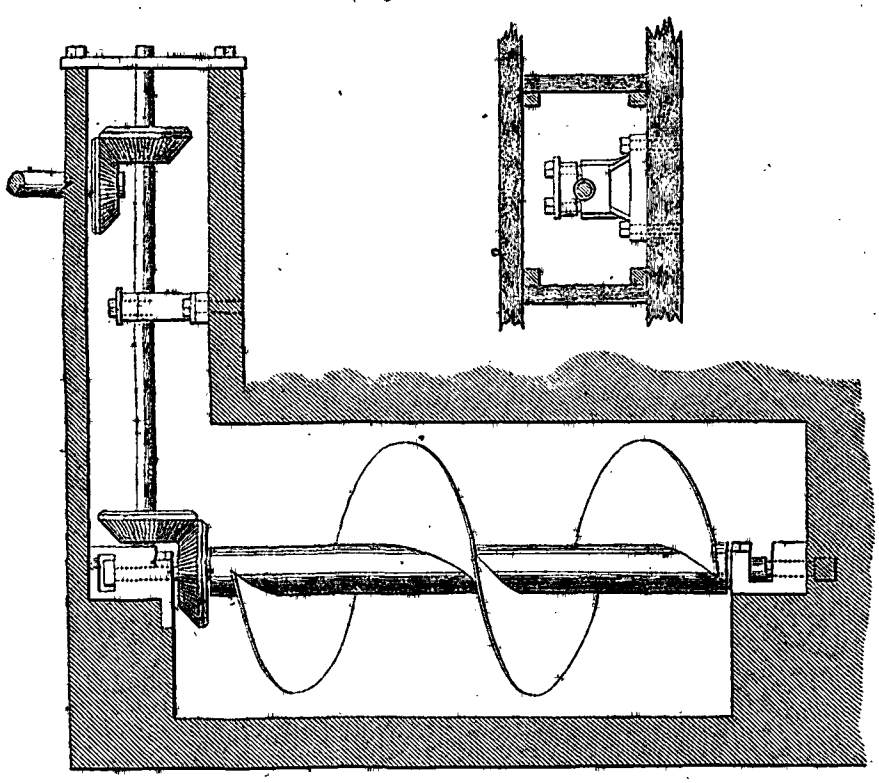

SMITH'S SCREW PROPELLER (ORIGINAL FORM).

Figs. 28. and 29.

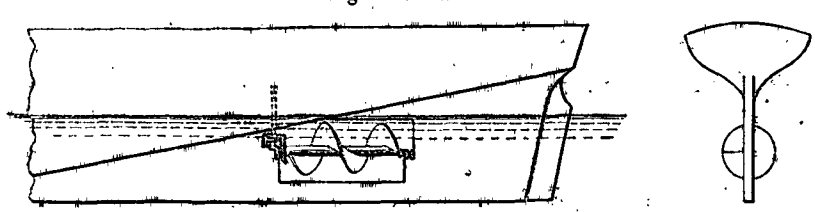

STERN OF A VESSEL WITH SMITH'S SCREW PROPELLER (ORIGINAL FORM).

wood, or otherwise placed more forward or more aft, or more or less deep in the water;" but, on the 30th April, 1839, he entered a disclaimer, limiting his claim to the use of a

single-threaded screw of one convolution, or a double-threaded screw of half a convolution (*figs.* 30, 31, and 32.), introduced into the centre of the dead wood. Smith's double-

Figs. 30, 31, and 32.

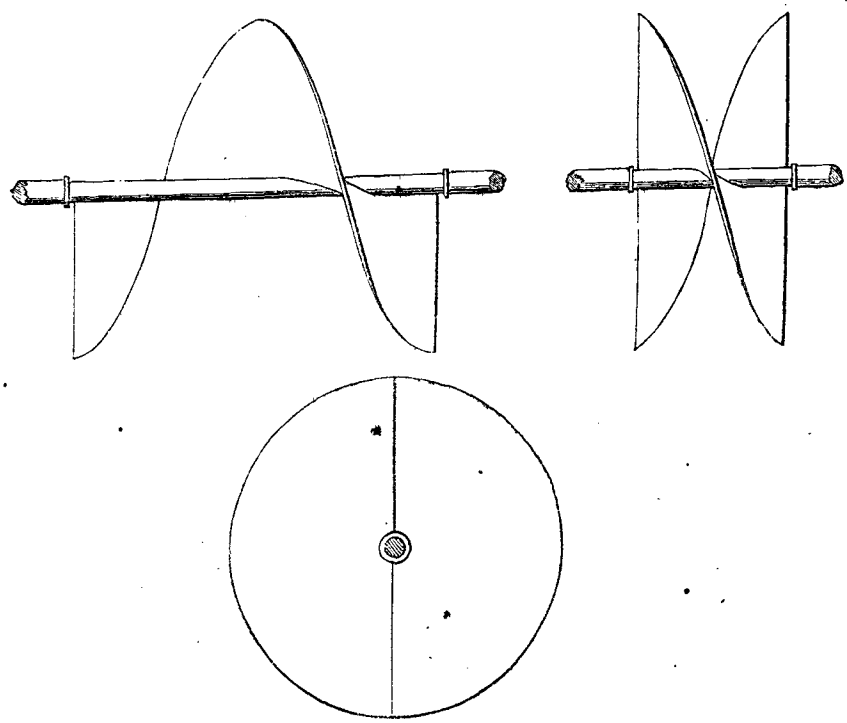

SMITH'S SCREW PROPELLER (AMENDED FORM).

threaded screw is the form of screw most commonly adopted in this country; but, instead of half a convolution, one-sixth of a convolution is found to give the best result, though the length to give a maximum performance will, in some measure, depend on the kind of vessel to which the screw is applied.

JOHN ERICSSON. 1836.

On the 13th July, 1836, a patent was taken out by John Ericsson, of London, engineer, for an improved propeller applicable to steam navigation, which propeller is described as consisting of "two thin broad hoops, or short cylinders, made to revolve in contrary directions round a common centre, each cylinder or hoop moving with a different velocity from the other; such hoops or cylinders being also situated entirely under the water at the stern of a boat, and furnished each with a series of short spiral planes or plates, —the plates of each series standing at an angle the exact converse of the angle given to those of the other series, and kept revolving by the power of a steam engine." The general

arrangement of the propeller prescribed by Ericsson, is shown in *figs.* 33. and 34., and the plates are to be "coiled round the cylinder spirally, like the thread of a screw,"—a large figure of

Figs. 33. and 34.

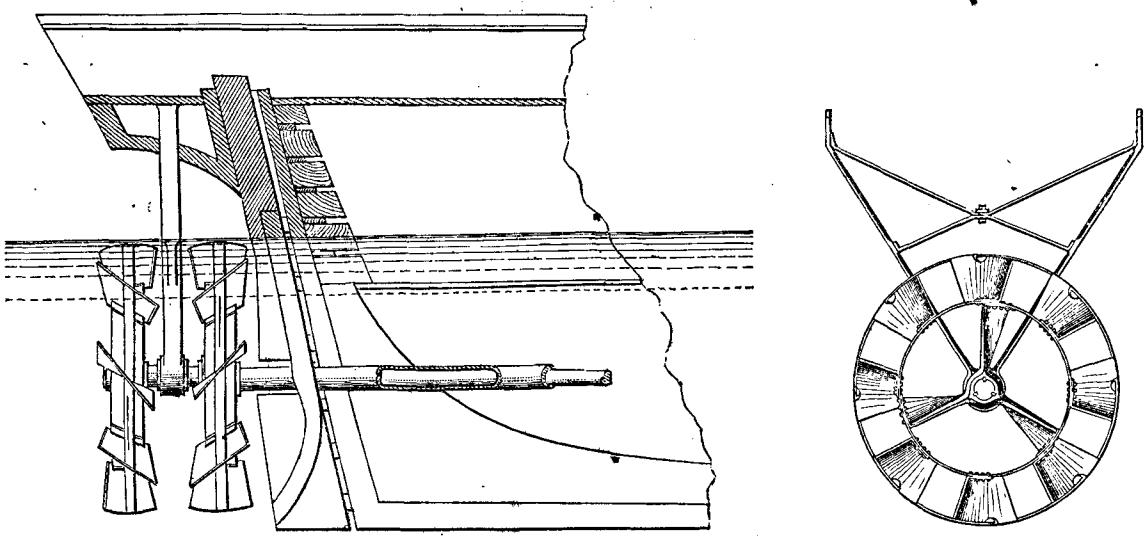

ERICSSON'S SCREW PROPELLER.

a screw being appended to the specification, to show that it is a segment of a screw of several threads, that is intended to be employed. Ericsson's propeller has been found very successful in practice, and it is the kind of screw most used in France and America. The cylinders to which the blades are attached, are not otherwise important, than as serving for the attachment of the blades without filling up the centre of the screw with a multitude of arms; but the outer cylinder or ring may be useful, in some cases, in preventing the entanglement of ropes or ice by the propeller. In some cases, Ericsson makes use of two screws, one behind the other, as shown in the figure. In other cases, he makes use of two screws side by side, one being placed in each quarter; but, in the generality of cases, he uses a single screw of a number of threads placed before the rudder in the stern. In some of its general features, Ericsson's plan resembles the previous arrangements of Perkins and Church; but Ericsson's propeller is completely submerged, and is so complete in its mechanical details, that, when tried, it was at once found to be efficient. The purpose of causing the hinder screw to revolve at a swifter velocity than the other, is to enable it to act upon the water which has been already set in motion, and thereby secure the advantages of an increasing pitch. But this object is not important, since an equally augmented reaction may be obtained by somewhat increasing the diameter of the first screw.

JAMES LOWE. 1838.

On the 24th September, 1838, a patent was enrolled by James Lowe, of London, mechanic, for improvements in propelling vessels, of which improvements only one is

described, and that consists in the use of one or more curved blades, set on a revolving shaft below the water line, those curved blades being of such a form, that, if continued, they would produce a screw. The form and arrangement of these curved blades are shown in *figs.* 35, 36, 37, and 38.,—the arrangement with four blades being alleged to be the best. The patentee states that he is aware segments of a screw had been previously patented by Edward Shorter, and that he does not claim, therefore, the application of curved blades generally; but that, inasmuch as Shorter's propellers were carried by outriggers over the bow of the vessel, and his are carried by a shaft lying below the water line, which pierces through the vessel, he claims the use of one or more curved blades, on shafts or axes, below the water line. It is clear, however, that this claim can in nowise be substantiated, since, in the arrangements of Bramah, Stevens, Brown, and Ericsson — all of previous date — curved blades, forming but a small part of a complete convolution of a screw, were employed, in conjunction with shafts or axes, below the water line; and there was no novelty, therefore, in such a combination at the time this patent was taken out.

Figs. 35, 36, 37, and 38.

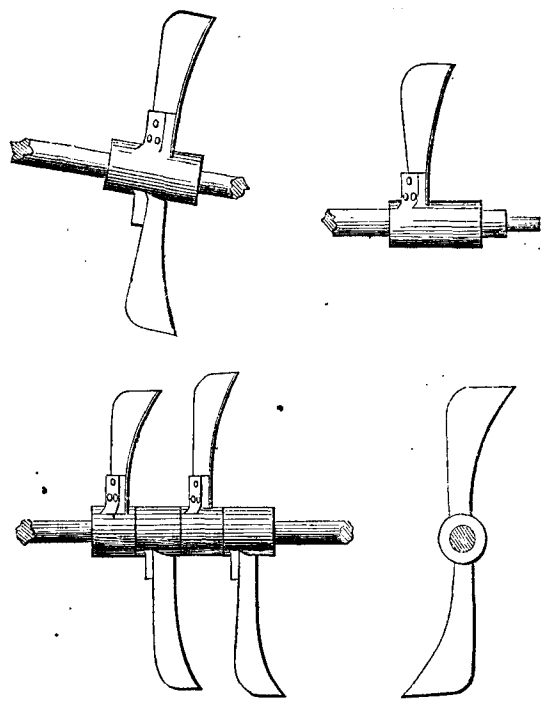

LOWE'S FORMS OF CURVED BLADES FOR PROPELLING.

JOSEPH J. O. TAYLOR. 1838.

On the 1st May, 1838, a patent was taken out by Joseph Jepson Oddy Taylor, of London, machinist, for an improved mode of propelling ships and other vessels. Mr. Taylor's invention, which is represented in *figs.* 39. and 40., is described as consisting of two blades, set on an axis, placed in the run or dead wood, and acting in the manner of a screw; but the blades are flat instead of helical, being like the blades of an oar, instead of having a curve, or twist, like the screw.

A method is also claimed of

Figs. 39. and 40.

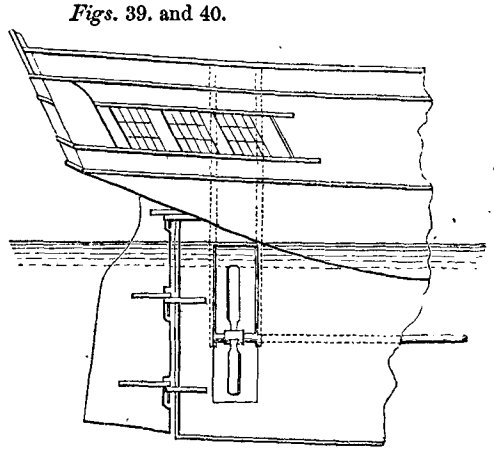

JOSEPH TAYLOR'S PROPELLER.

shipping and unshipping the propeller by the aid of a sliding-frame, or sash, guided by vertical grooves cut in the true and false stern posts, and in which frame the propeller is placed. By drawing the driving shaft inward through the stuffing-box, the frame and screw can be drawn out of the water, and either rested on deck or placed in a boat alongside.

FREDERICK E. FRAISINET. 1838.

On the 26th July, 1838, a patent was taken out by Frederick Edouard Fraisinet, of Westminster, for improvements in the machinery for propelling vessels by steam. This patent prescribes the use of a revolving propeller on each side of the vessel, formed in the manner of a screw,—an arrangement contemplated by most of the preceding inventors; but these screws are to have the central portions cut away, as recommended by Fergusson, Delisle, and Ericsson, and are to be formed with an increasing pitch, as previously suggested by Emerson, Bourdon, Tredgold, and Woodcroft. The propellers

Fig. 41.

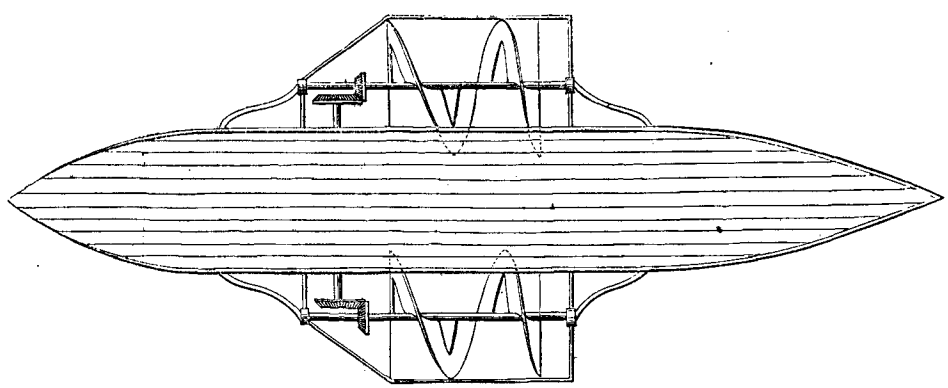

FRAISINET'S SCREW PROPELLERS.

are to be put into revolution by level gearing, and the general arrangement, in which there is nothing very novel or advantageous, is represented in *fig.* 41.

CAPTAIN SMITH, R.N. 1838.

On the 13th November, 1838, a patent was taken out by Captain George Smith, of the Royal Navy, for improvements in vessels to be propelled by steam, or other power, and in the construction and arrangement of the machinery for propelling. One of the improvements Captain Smith describes is the paddle-box boat, which some years since obtained considerable introduction; but the main improvement is a method of

propelling — the general nature of which will be understood by a reference to *fig.* 42. There are to be two propellers, each of which differs little from that of Joseph Taylor, being formed of flat surfaces, set at a suitable inclination with the driving shaft, but the inclination of the one surface is to be the reverse of the other; and these propellers are to be set one before the other in the dead wood, and are to be turned with the same velocity in opposite directions, as in Perkins' and Church's arrangements.

Fig. 42.

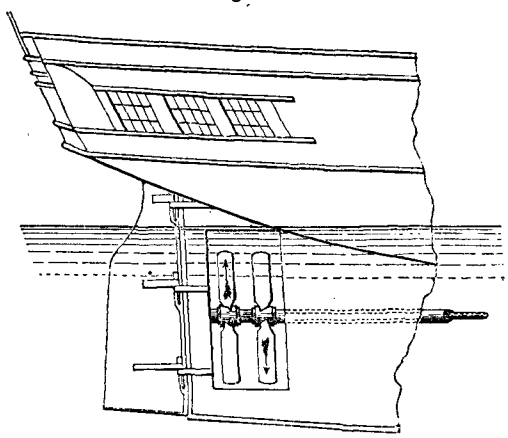

CAPTAIN SMITH'S PROPELLER.

PETER TAYLOR. 1838.

On the 1st December, 1838, a patent was taken out by Peter Taylor, rope merchant, of Birching Bower, Lancashire, for improvements in machinery for propelling, in which, among a number of other projects obscurely described, is included the arrangement of screw blades represented in *fig.* 43. The main peculiarity of this arrangement is, that by an appropriate connection between the shafts, the arms of one screw are made, in its revolution, to fall into the spaces intervening between the arms of the other screw; and the two screws thus work in a smaller space, without the arms striking one another. The screws are to revolve in opposite directions.

Fig. 43.

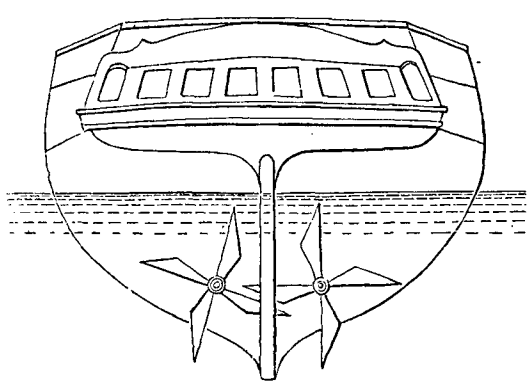

PETER TAYLOR'S SCREW PROPELLERS.

JOHN COOPE HADDAN. 1839.

On the 22nd January, 1839, a patent was taken out by John Coope Haddan, civil engineer, London, for improvements in propelling vessels, of which the principal is a screw, or helical blade, so made as to be supported by arms at some distance from the screw shaft, to the end that the central part of the screw may be as much an open space as the necessity of giving adequate strength to the arms will permit. This screw is shown in *figs.* 44. and 45. The idea of disposing the propelling surface at a distance

Figs. 44. and 45.

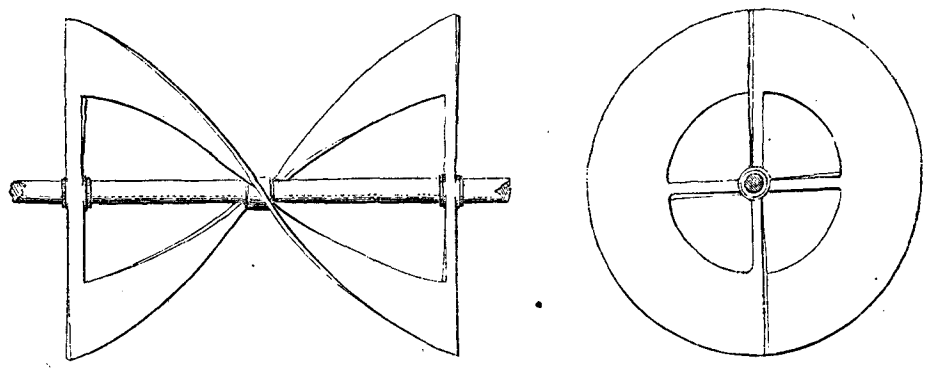

HADDAN'S SCREW PROPELLER.

from the shaft, had previously been propounded, or put in practice, by Fergusson, Delisle, Ericsson, and Fraisinet.

GEORGE RENNIE, F.R.S. 1839.

On the 26th November, 1839, a patent was taken out by George Rennie, of London, civil engineer, for improved methods of propelling vessels. Of these improvements, one consists of a new species of screw, which Mr. Rennie terms a "Conoidal Propeller," being formed by winding an inclined plane upon a cone, or spire, whereas the helix, or ordinary screw, is formed by winding an inclined plane upon a cylinder. In the common screw, the angle which the helical feather, or arm, makes with the screw shaft, is different at every point in its length, each arm being so twisted as to be nearly in a line with the shaft towards the centre, and more nearly at right angles with it towards the circumference. A corkscrew stair, which is a familiar example of a helix, is much steeper near the centre of the tower than at the outer wall; and if a line were to be traced, spirally, upon a corkscrew stair, beginning near the inner end of the steps, at the top of the tower, and gradually inclining towards the outer end as the line comes nearer the ground, it is obvious that the upper portion of this line would be much steeper than the lower portion, or, in other words, it would be a curved, and not a straight line. A curved line, therefore, wound upon a cone, forms a helix, and, if this be so, a straight line wound upon a cone cannot form a helix; and if the steps of a corkscrew stair be formed in such a manner that the same amount of steepness which obtains near the inner end of the steps at the top of the tower, is continued down the spiral line to the outer end of the steps at the bottom of the tower, then it is certain that the pitch of this corkscrew stair must be an increasing one from the top to the bottom. Now in Mr. Rennie's propeller, which is an inclined plane wound upon a cone, the steepness is uniform throughout, and therefore his propeller is a screw with an increasing pitch. In the previous projects of Emerson, Bourdon, Tredgold, and Woodcroft, for forming screws

with an increasing pitch, the intended configuration was given by winding a curved line round a cylinder. Mr. Rennie accomplishes the same object in a different manner, namely, by winding a straight line round a cone, and the steepness of the cone will determine the amount of variation in the pitch of the screw. Instead of the ordinary cone, Mr. Rennie appears to give the preference to the logarithmic cone, or spire, represented in *figs.* 46. and 47., as being the most suitable for his purpose; and, besides the more

Figs. 46. and 47.

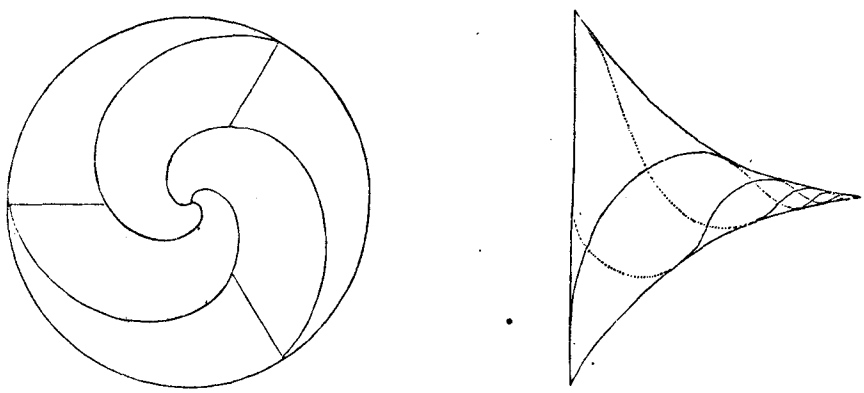

RENNIE'S CONOIDAL SCREW.

obvious benefits of this form of propeller, he considers that from the gradual way in which the oblique edge of the spiral feather separates the water, there will be a less waste of power than in ordinary screws upon the cutting edge. The edge of an ordinary screw resembles a straight sword, whereas the edge of Mr. Rennie's screw more nearly resembles a scimitar, in its mode of operation. It does not appear that Mr. Rennie's propeller has been much employed in practice, and probably it will require such adjustments as experiment usually suggests in the case of new devices, to enable it to realise as good a performance as arrangements of older standing and more mature growth. But in Mr. Rennie's plan there is, I consider, the ground-work, at least, of a very efficient propeller, and the general conceptions out of which it has arisen are marked both by originality and refinement.

GEORGE HUNT. 1839.

On the 25th November, 1839, a patent was taken out by George Hunt, of Greenwich, engineer, for steering a screw vessel by means of the screw itself, whereby the rudder might be dispensed with. This object is proposed to be accomplished by placing the screw in a frame at the stern, of such a construction as to be moveable in the same manner as a rudder; and by turning this frame to the one side or the other, the reaction of the screw will steer the vessel. There is nothing novel in this idea. Shorter, in 1800, proposed to steer the vessel by means of the screw; and Dallery, in 1803, placed one of

his screws in the rudder, so that it turned with it. Trevithick, also, in 1815, and Millington, in 1816, proposed to steer, or aid the steerage of the vessel, by moving the screw out of the line of the keel. The general arrangement proposed by Hunt for his propeller, is represented in *fig.* 48. Four blades, like the arms of a windmill, are attached to one another, so as to form a four-bladed propeller, and this propeller is hung upon a vertical pipe, jointed to the stern in the manner of a rudder. Through this pipe a vertical shaft descends, which is worked by the engine; and the propeller, which is supported on a short horizontal shaft, is turned round by bevel gearing, enclosed in a box at the centre of the shaft. This plan, though judicious in some of the details, has not come into use, and there is little probability that, as a propeller, the arrangement will meet with any considerable adoption.

Fig. 48.

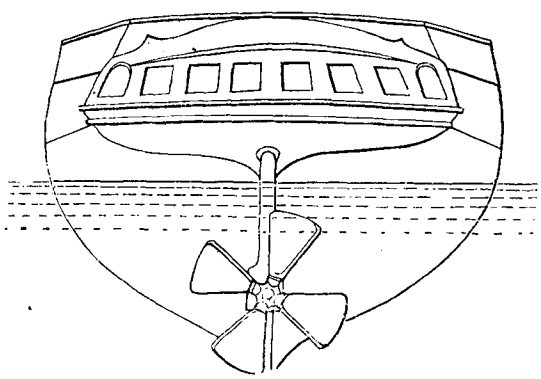

HUNT'S SWIVELLING PROPELLER.

CAPTAIN CARPENTER. 1840.

On the 13th June, 1840, a patent was taken out by Edward John Carpenter, commander in the Royal Navy, for improvements in the application of machinery for assisting vessels to perform certain evolutions upon the water, and these improvements consist, partly, of propelling blades of a novel form, which are to act upon the water in the manner of a screw, and partly of a new arrangement of these blades in the vessel. *Figs.* 49. to 57. represent the various forms of propeller which Captain Carpenter

Figs. 49, 50, 51, 52, 53, 54, 55, 56, and 57.

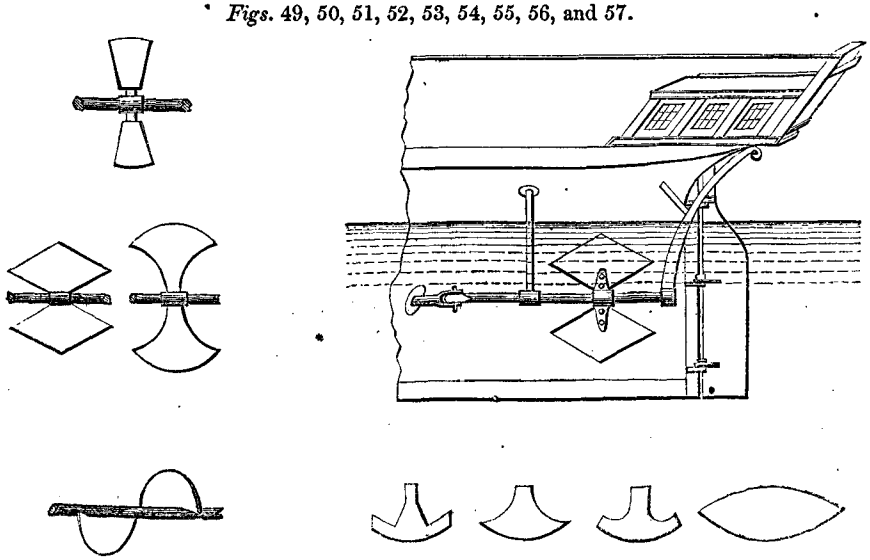

CAPTAIN CARPENTER'S PROPELLERS.

proposes to employ, and a propeller may either be placed in each quarter, as shown in the figure, or a single propeller may be set in a hanging frame, abaft the rudder, — the rudder being, in such case, formed with an oval eye, to permit the shaft of the propeller to pass through it. In either alternative the propeller shaft is to be formed with a universal joint, in order that the propeller may be raised with facility out of the water.

MILES BERRY. 1840.

On the 14th August, 1840, a patent was taken out by Miles Berry, of London, patent agent, for improvements in the arrangement, construction, and mode of applying apparatus for propelling vessels, being a communication from a foreigner abroad. The nature of the arrangement will be at once understood by a reference to *fig.* 58. Two screws are placed at an angle with one another, in the bow of the vessel; and it is supposed that the action of these screws, in sucking away the water from the bow and discharging it at the sides, will facilitate, to an unusual extent, the progress of the vessel. The screws, which are somewhat of the shape suggested in 1803, by Dallery, are only partly immerged, and the project is exceedingly crude and inartificial. Such rough-hewn ideas ought not to be able to obtain the sanction of a patent at all, for such patents obstruct improvement instead of advancing it. To justify the acquisition of a patent, merit should exist, and labour should be bestowed, so that a useful step of improvement may reasonably be expected; and an array of undeveloped and barren schemes bars the path of progress, since a step cannot be taken without some forgotten patentee starting up to contend for the rewards which properly belong to the useful practical inventor. It is not to the persons who dream about improvements that patents should be conceded, but to those who actually bring such improvements into beneficial operation; and all patents ought to be held invalid which are not brought into beneficial use within a reasonable time.

Fig. 58.

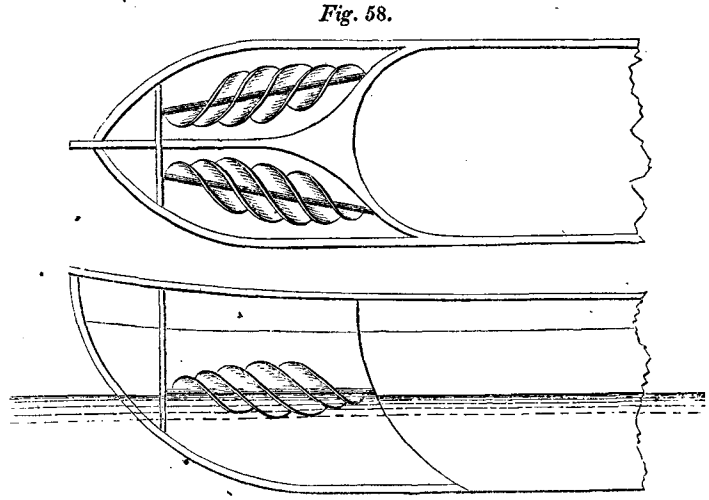

MILES BERRY'S SCREW PROPELLERS.

HENRY WIMSHURST. 1840.

On the 2nd November, 1840, a patent was taken out by Henry Wimshurst, of Limehouse, shipbuilder, for improvements in steam vessels, in communicating motion to

the propellers of screw vessels, and in shipping and unshipping the propeller. The patentee prescribes the use of a post, which he calls a "body post," carried up before the opening in the dead wood, from the keel to the main or upper deck, and to this post, he says, if the rudder were carried away, a temporary rudder could be hung. The propeller is to be shipped or unshipped by the aid of endless chains passing into the water at the stern, and the motion of the engine is to be communicated to the screw by a combination of straps and gearing.

GEORGE BLAXLAND. 1840.

On the 28th November, 1840, a patent was taken out by George Blaxland, of Greenwich, engineer, for an improved method of propelling. This improvement consists in the use of one or more inclined planes (*a a*, *fig.* 59.) attached to a revolving axis at the stern of the vessel, after the fashion of the previous arrangements of Bernouilli*,

Figs. 59. and 60.

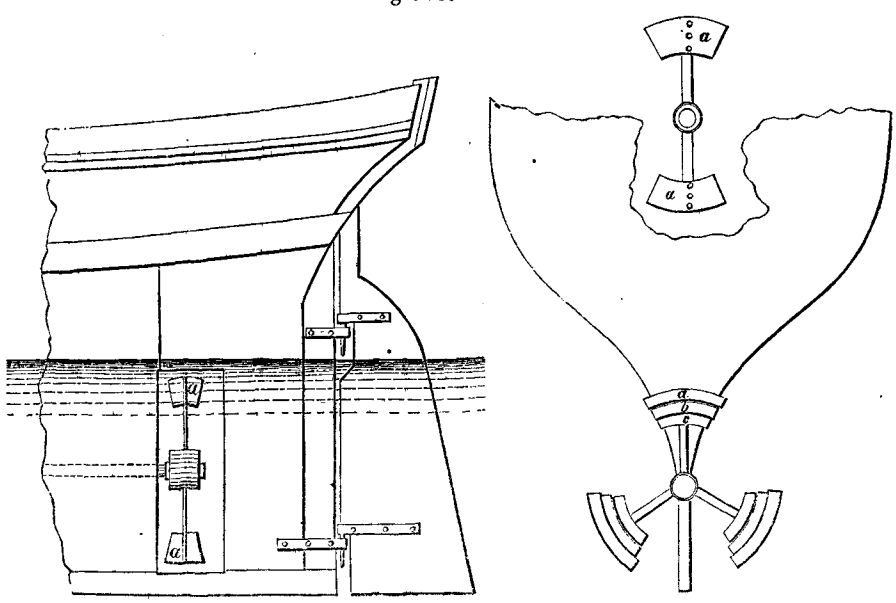

BLAXLAND'S PROPELLER.

Bramah, Taylor, and Captain Smith; or a succession of inclined planes, bent to a circle (*a b c*, *fig.* 60.), may be set upon appropriate revolving arms, the bent planes of each

* The apparatus proposed by Bernouilli for impelling vessels without wind is described as follows: — "The instrument for acting on the water consists of an arbor 14 ft. long, and 2 in. diameter, of iron. This carries eight wheels for acting on the water, to each of which it is perpendicular, and forms an axis for them all. The wheels should be at equal distances from each other. Each wheel consists of eight arms of iron, each 3 ft. long, so that the whole diameter of the wheel is 6 ft. Each of these arms, at a distance of 20 in. from the centre, carries a sheet iron plane (or paddle) 16 in. square, which is inclined so as to form an angle of 60°, both with the arbor and keel of the vessel, to which the arbor is placed parallel."

arm being arranged concentrically with the centre of motion, and being attached to the arm with different inclinations, so as practically to constitute a screw in steps. This propeller, which is to be placed in the dead wood, is destitute of an outside bearing. An arrangement of tightening pulleys, applicable to the straps which give motion to the propeller, is also described.

DAVID NAPIER. 1841.

On the 22nd March, a patent was taken out by David Napier, of Millwall, engineer, for improvements in propelling vessels. Mr. Napier proposed to apply two paddle-wheels with oblique float-boards at the stern of the vessel, as shown in *fig.* 61., and these wheels were to revolve in opposite directions, and by their reaction upon the water were to force forward the vessel. The wheels were not set in the same vertical plane, but one was placed somewhat before the other, so as to allow the circles in which the arms revolve to intersect without the arms themselves coming into contact. This contrivance, which resembles, in some respects, the arrangement previously patented by Perkins, was practically tested by Mr. Napier, in a vessel built for the purpose; but he did not succeed in obtaining the amount of speed that he expected. From what I recollect of this vessel, I should be disposed to attribute her defective performance to the circumstance of the run having been made too full, owing to the weight of the machinery having been placed very near the stern; and I consider that with a vessel of a good form a very satisfactory result would be obtained from Mr. Napier's arrangement. It is less compact, however, than the screw, as commonly applied; and if the vessel were to be impeded, either by head winds or otherwise, the revolving wheels would throw up the water upon the stern to such an extent as to be productive of much inconvenience, unless paddle-boxes were applied.

Fig. 61.

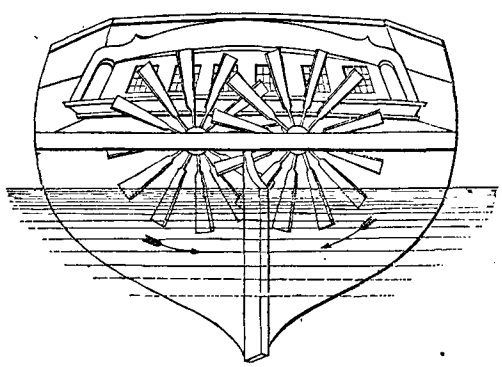

DAVID NAPIER'S PROPELLERS.

WILLIAM JOEST. 1841.

On the 26th May, 1841, a patent was taken out by William Joest, of London, merchant, for improvements in propelling vessels, being a communication from a foreigner abroad. One of these improvements is a form of screw which the patentee terms a "Syphon Screw," and which is represented in *figs.* 62. and 63. This screw is constructed by setting upon one hoop, and within another, a succession of inclined or helical plates,

after the fashion previously suggested by Delisle, Church, Ericsson, and others, but the outline of the plate is of a different form from what they employed. Another of the improvements described, is an arrangement of propelling blades, represented in *fig.* 64., and which the patentee designates as "Double fishes' tails." A frame, articulated to the ship in the manner of a rudder, is moved from side to side by appropriate mechanism, and at the end of this frame there are two moveable plates, so applied, that the one acts as a propeller when the frame moves in one direction, and the other acts as a propeller when the frame moves in the other direction. These plates are attached at their centres to the reciprocating frame by suitable pivots, which permit them to move like the beam of a pair of scales, and the motion of the plates is restricted by chains. It is obvious that such a propeller would soon knock itself to pieces, even if it could be divested of other objections.

Figs. 62, 63, and 64.

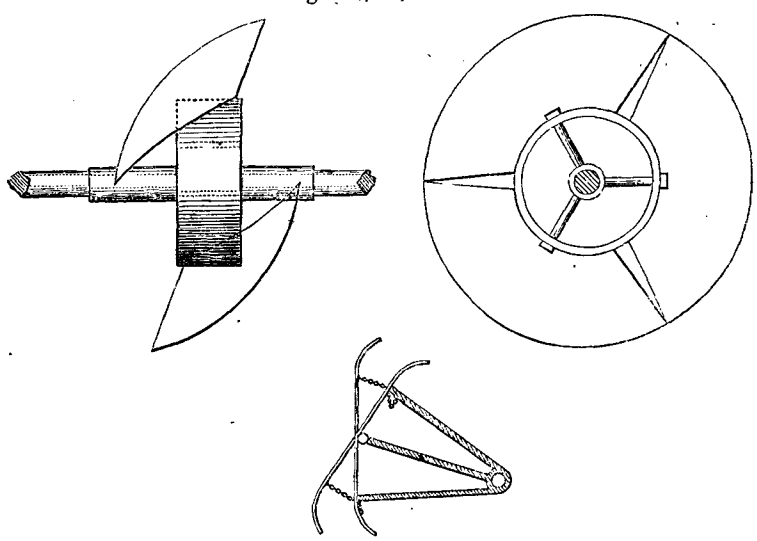

WILLIAM JOEST'S PROPELLERS.

BENJAMIN BIRAM. 1842.

On the 8th February, 1842, a patent was taken out by Benjamin Biram, of Wentworth, Yorkshire, colliery viewer, for a superior method of forming the vanes or arms of windmills, water-wheels, ventilators, &c., by setting them out in a different manner from that usually employed. The improvement is alleged to be also applicable to the propeller of a ship. The forms of propeller proposed are shown in *figs.* 65, 66, 67, and 68., and

Figs. 65, 66, 67, and 68.

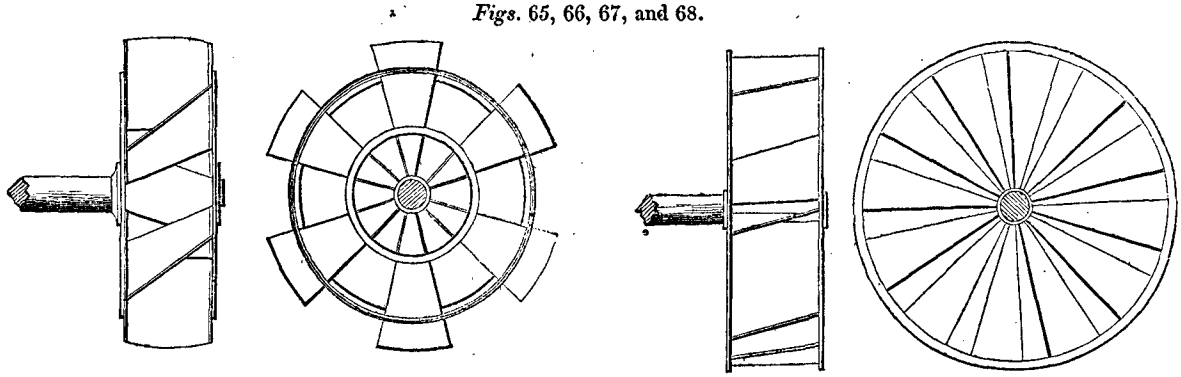

BIRAM'S PROPELLERS.

the patentee states that one of these propellers should be set in each quarter, and that its diameter should be three-fourths of the diameter of a paddle-wheel. This arrangement, it will be remarked, resembles the projects of several previous inventors.

JAMES HAMER. 1843.

On the 9th January, 1843, a patent was taken out by James Hamer, of Wardour Street, London, engineer, for improvements in propelling vessels. The chief of these improvements is a peculiar kind of rotatory engine, from the use of which in steam vessels, and especially in connection with the screw, material benefit is anticipated; and an arrangement is delineated for enabling the rotatory engine to give motion to the screw when the axes of the two instruments are not coincident. This arrangement is represented in *fig.* 69., and it will be seen to be similar to an arrangement previously suggested by Millington. There is no novelty claimed in the screw itself that is intended to be employed.

Fig. 69.

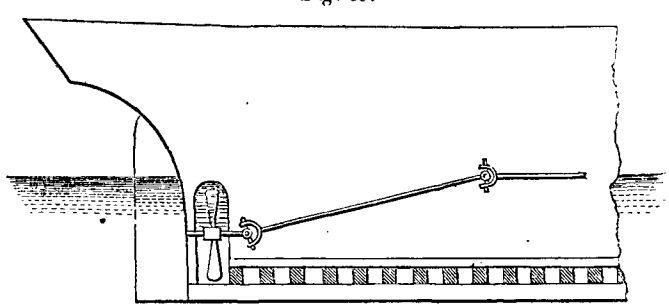

HAMER'S SCREW PROPELLER.

THE EARL OF DUNDONALD. 1843.

On the 19th January, 1843, a patent was taken out by Thomas, Earl of Dundonald, for a variety of improvements in engines and other machinery, among which is an improved apparatus for propelling vessels. This improved propeller consists of an arrangement of propelling blades immerged beneath the water, in the manner now usual in screw vessels, but instead of the blades being set at right angles with the propeller shaft, they form an angle therewith, as represented in *fig.* 70. One important effect of this arrangement is, that it corrects the centrifugal action of the screw; for, whereas, in common screws, the water which is discharged backwards assumes a conical figure, enlarging as it recedes, in a screw formed on Lord Dundonald's plan the outline of the moving water will be cylindrical, the centrifugal action being counteracted by the convergent action due to the backward inclination of the propelling blades. It is found, practically, that screws constructed upon this principle give a better result than ordinary screws; and the improvement appears to be a valuable improvement, and one that is likely to come into use.

Fig. 70.

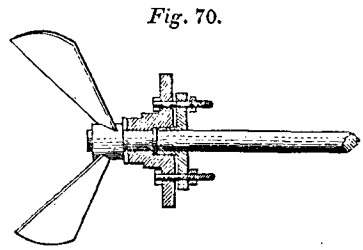

THE EARL OF DUNDONALD'S PROPELLER.

THOMAS SUNDERLAND. 1843.

On the 19th January, 1843, a patent was taken out by Thomas Sunderland, of London, for improvements in propelling, and in accelerating the flow of liquids through pipes and other channels. The form of propeller proposed for giving motion to vessels is represented in *fig.* 71. Two elliptical plates are affixed, at a suitable angle, to arms projecting from a horizontal shaft, and when the shaft is put into revolution, the vessel is propelled by the inclined surfaces, which, in their revolution, impinge upon the water. The propeller is to be situated behind the rudder, as in Ericsson's arrangement, and the propeller shaft, as in Ericsson's case, divides the rudder into two portions, which, however, may be joined together by suitable connections. The plan of propelling by inclined planes, revolving in a circle, had been proposed by Bernouilli nearly a century before, and the proposal had been frequently repeated by subsequent inventors. Inclined planes of this particular form had been suggested in 1840 by Captain Carpenter; and Bramah, Blaxland, and other previous patentees, proposed to dispense with the bearing at the end of the shaft, so that there is no novelty even in this arrangement, and quite as little advantage. A propeller overhanging in the manner of Sunderland's, would be very liable to heavy vibration, which would cause the stuffing-box to leak; and the shaft would be in danger of being broken off altogether, especially if it became entangled with ropes or fishing-nets, which screw propellers sometimes catch up.

Fig. 71.

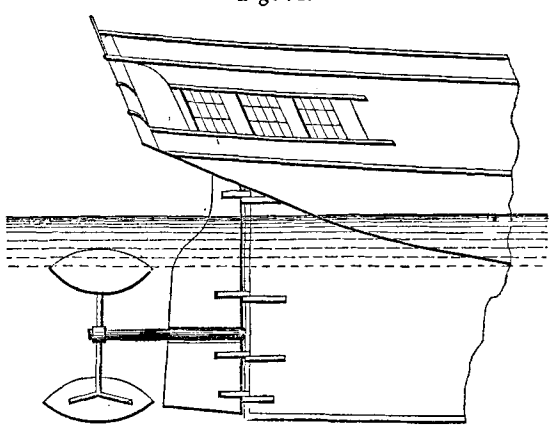

SUNDERLAND'S PROPELLER.

ROBERT WALKER, JUN. 1843.

On the 18th May, 1843, a patent was taken out by Robert Walker, jun., for improvements in propelling. Mr. Walker's arrangement, which is shown in *fig.* 72., involves the use of a pipe within the vessel, through the foremost end of which the water is drawn, and through the posterior part of which the water is discharged, by a screw revolving within the pipe.

Fig. 72.

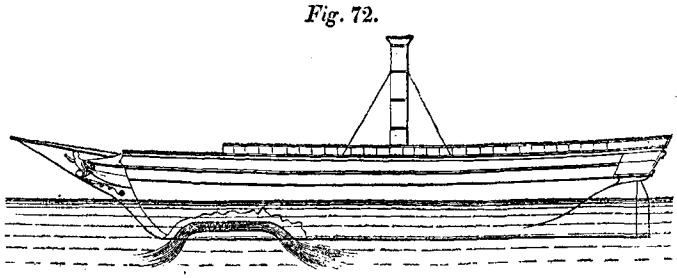

WALKER'S PROPELLER.

ELIJAH GALLOWAY. 1843.

On the 25th May, 1843, a patent was taken out by Elijah Galloway, of London, civil engineer, for improvements in the machinery for propelling vessels. The specification of this patent, after describing an improved paddle-wheel, and various new methods of bringing up the speed of a screw propeller, proceeds to explain in what manner a screw propeller may be shipped or unshipped with facility. The patentee does not propose any new form of screw; but he proposes to place a screw of some approved kind in each quarter of the vessel, and he proposes to ship and unship these propellers by the aid of suitable chains descending into the water at the stern. The first thing to be done in unshipping the propeller is to draw the shaft inwards into the vessel; and this is accomplished by heaving a strain upon the chain *l*, *fig.* 73., which pulls the shaft *q* upon end, until it is detached from the after-bearing *s*, when a strain is hove upon the chain *p*, by which the propeller is lifted out of the water. In shipping the propeller this operation has just to be reversed.

Fig. 73.

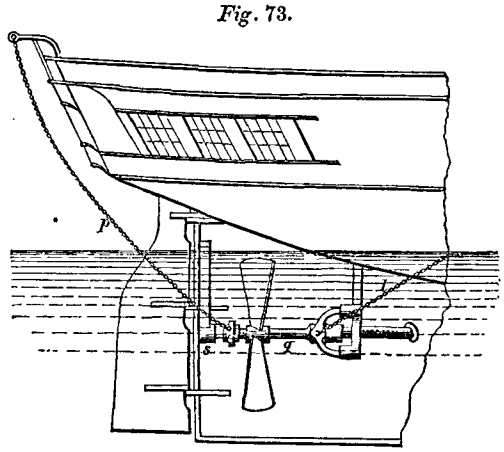

GALLOWAY'S MODE OF SHIPPING AND UNSHIPPING THE SCREW.

JOSEPH MAUDSLAY. 1843.

On the 13th July, 1843, a patent was taken out by Joseph Maudslay, of London, engineer, for certain improvements in machinery used for propelling vessels by steam power. One of these improvements consists of a new method of communicating rapid rotatory motion to a propeller, when the prime mover is a steam engine; and another consists in the use of a rudder in each quarter, instead of a single rudder in the stern, whereby the stern-post is left clear for the application of the screw. The arrangement of rudders proposed by Mr. Maudslay is represented in *fig.* 74. A vessel was constructed to test the efficacy of this plan in practice, but its operation was not found to be satisfactory, as the vessel, it was discovered, could not be steered in a proper manner. In the vessel thus subjected to the test of experiment,

Fig. 74.

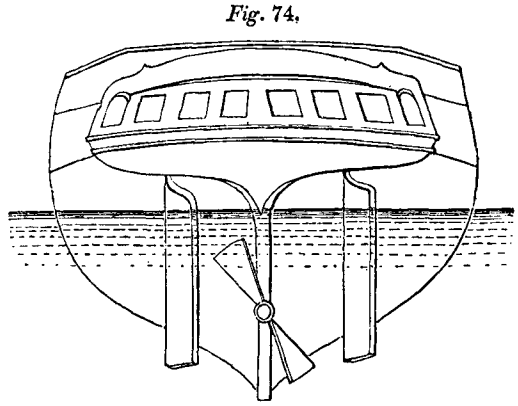

MAUDSLAY'S DUPLICATE RUDDERS FOR SCREW VESSELS.

the rudders, instead of being of the form represented in the figure, were more on the throttle-valve, or balance, principle; that is, instead of being hung by one edge, like a common rudder or a common door, they were hung upon spindles passing through them from top to bottom, near the centre of their breadth. Rudders upon this plan have been in use in the native boats in India from time immemorial, and only one rudder is employed in these boats, which rudder passes down into the water, not in the centre of the stern, but a little to the one side of the centre. The rudders of these Indian vessels are perfectly efficient, and are very easily moved.

HENRY DAVIES. 1844.

On the 25th January, 1844, a patent was taken out by Henry Davies, of Norbury, in the county of Stafford, engineer, for improvements in the arrangements for communicating motion to vessels. The propeller employed is a screw; but instead of being placed at the outside of the vessel, in the usual manner, it is placed in a false bottom, built on to the vessel, so as to form a channel through which the water is driven by the screw. This, therefore, is an expedient for propelling by forcing out water at the stern of the vessel,—an expedient patented by Toogood and Hayes in 1661, by Allen in 1729, by Rumsey in 1788, and by numerous other persons at different times, but which has never yet been brought into successful operation. The principle of any such device should be to pull on the vessel by a rope of water passing in at the bow and out at the stern: to obtain a maximum effect, this rope, or column of water, should be as stationary as possible, and it is only by making it large that it can have little motion. The same effect, however, may be produced by acting upon a column of water at each side of the vessel, which action is accomplished by employing paddle-wheels; or a central column may be acted upon by employing a screw at the bow or stern. Any plan of propelling by forcing out water at the stern, has necessarily to encounter the disadvantage of the friction of the water in the pipe, and at high velocities this friction is equal to $1\frac{1}{2}$ lbs. of retarding pressure per square foot of surface of the pipe. The friction of ships is an important element of their resistance, and consequently ships may be made too sharp; for the benefit due to a fine bow and stern may be more than counteracted by the increased friction due to the increased length.

ROBERT HODGSON. 1844.

On the 2nd February, 1844, a patent was taken out by Robert Hodgson, of London, engineer, for improvements in propelling vessels. Mr. Hodgson proposed to attach the blades of his propeller to the shaft, not at right angles, but at some such angle as is

shown in *fig.* 75.; and he also proposes to cause the cutting edge of his propeller to describe a parabolic or conical figure, by adopting some such construction as is shown in *figs.* 76. and 77. Propellers with the blades inclined backwards, have now been introduced into several vessels with very good results; but this configuration is prescribed

Figs. 75, 76, and 77.

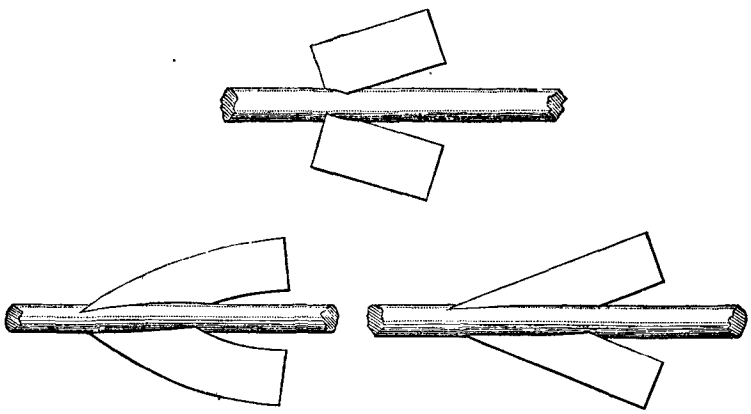

HODGSON'S CONICAL AND PARABOLIC PROPELLERS.

in the Earl of Dundonald's patent of January, 1843, and it was not a novelty, therefore, at the time Mr. Hodgson's patent was taken out, except as regards the parabolic form, which, however, there is no evidence to show is better than the conical form. The manner in which the blades should be bent, and the extent to which they should be bent, have yet to be determined; but it is obvious that various circumstances will affect the configuration which ought to be adopted. For if the pitch and slip of the screw be considerable, the centrifugal action will also be considerable, and a larger inclination of the arms backward will in that case be advisable, than if the pitch were smaller and the slip less. It is also clear that if the screw is suitably varied in its pitch from the centre to the circumference, the same result will be produced when the arms incline backwards so as to describe a cone, as is produced in the common screw when the arms are bent backwards so as to form a parabola.

BENNET WOODCROFT. 1844.

On the 13th February, 1844, a patent was taken out by Bennet Woodcroft, of Manchester, printer, for improvements in propelling vessels, whereby he would have the power of "varying at pleasure the angle of screw propeller blades with the axis on which they work, according to the varying circumstances of wind, current, tonnage, and the other conditions affecting the action of the motive power in vessels." The nature of the arrangements by which this object is to be attained will be seen by a reference to

figs. 78, 79, and 80. Upon the propeller shaft a boss is fixed, in which boss there are round holes for receiving the cylindrical ends of the propeller blades. At the point where the

Figs. 78, 79, and 80.

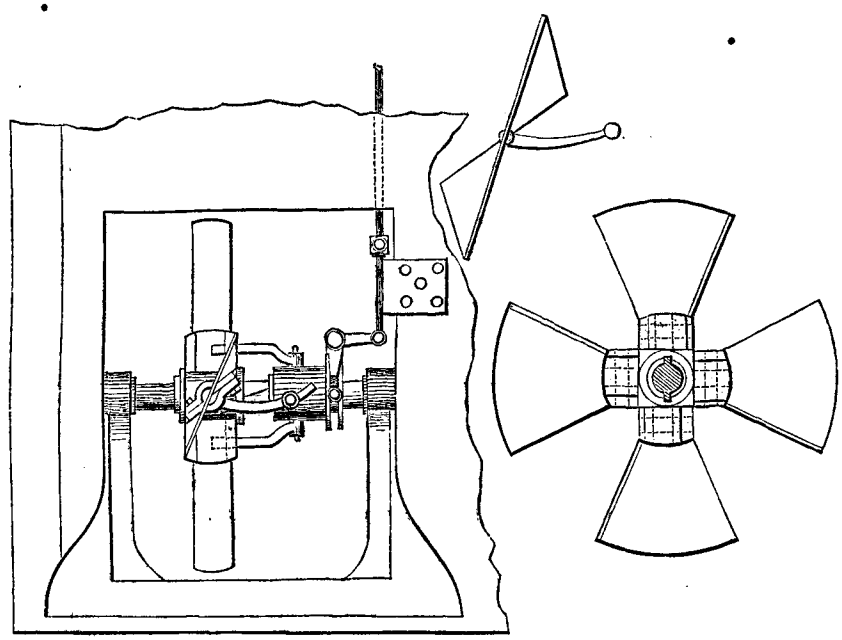

WOODCROFT'S ARRANGEMENT FOR VARYING THE ANGLE OF PROPELLER BLADES.

blades emerge from the boss, short arms or levers are attached, by means of which the blades may be turned round into any desired inclination with the shaft, and the motion of these levers is governed by a collar encircling the shaft, which collar is itself moved in or out upon the shaft by a bell-crank lever, acted upon by a rod which passes up to the deck of the vessel. This arrangement is open to various mechanical objections; and the actuating mechanism, instead of being exposed to the water, should be included in a boss, as has subsequently been done by Hayes and Maudslay. In ordinary screw vessels there does not appear to be much advantage derivable from varying the pitch of the screw, or the angle of the propelling blades; for screw engines will go at nearly the same speed, whether the wind be adverse or favourable, or whether the vessel is much or little immersed. This, indeed, is one of the defects of the screw as heretofore applied; and the use of an expedient for changing the pitch involves the supposition that in adverse winds, or with deep immersions, the velocity of rotation of the screw is very much diminished,—which, however, is not the case. Nor is the expedient more remarkable for its novelty than for its advantage. Hooke, in the windmill instrument he showed to the Royal Society in 1683, had an arrangement for altering at pleasure the angle of the blades; and Millington, in his patent of 1816, states that the vanes or propelling blades he employs are "to shift on their pivots, or points of attachment, so as to alter

the angle which they make with the plane of their motion, from 45 degrees to any greater or lesser angle, according to the speed with which they are moved."

WILLIAM FAIRBAIRN. 1844.

On the 13th February, 1844, a patent was taken out by William Fairbairn, of Manchester, engineer, for improvements in machinery used for propelling vessels by steam power. This patent does not prescribe any new form of propeller, but merely describes a certain arrangement of gearing for increasing the velocity of the screw, relatively with the velocity of the engine, in any ratio that may be desired.

CHRISTOPHER D. HAYES. 1844.

On the 3rd July, 1844, a patent was taken out by Christopher Dunkin Hayes, of Bermondsey, wharfinger, for certain improvements in propelling vessels. One of these improvements is an arrangement of gearing, whereby the velocity of the propeller, relatively with that of the engine, can be varied; and another is an arrangement for changing the angle of the propelling blades, as previously suggested by Hooke, Millington, and Woodcroft.

J. G. BODMER. 1844.

On the 13th July, 1844, a patent was taken out by John George Bodmer, of Manchester, engineer, for a variety of improvements in engines and other machinery; and one of these improvements is an improvement in the apparatus for propelling vessels. The nature of the arrangement Mr. Bodmer proposes, will be understood by a reference to *fig.* 81. Two small wheels, operating on the principle of centrifugal fans, are immerged in the water at the stern of the vessel, one being placed in each quarter; and these wheels are driven by vertical shafts, ascending above the level of the water. Surrounding each wheel there is a cylindrical casing, like the casing of a centrifugal fan. These casings may be turned round upon their axes; and at the circumference of each casing there is an aperture for the discharge of the water which enters at the centre. If these apertures be pointed aft, so that the water issuing from them is discharged astern, the vessel will be propelled in a forward direction; or if

Fig. 81.

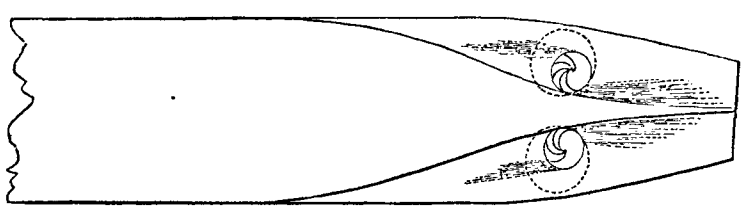

BODMER'S CENTRIFUGAL PROPELLERS.

the casings be turned round, so that the apertures are pointed forward, the vessel will be driven astern. By pointing the apertures in any intermediate direction, the vessel will be deflected to a corresponding extent from a straight course; and by turning round the casings, the columns of water discharged from the apertures may be made to act in aid of the rudder, or even to perform the functions of a rudder, should the rudder happen to be carried away.

FREDERICK ROSENBORG. 1845.

On the 12th June, 1845, a patent was taken out by Frederick Rosenborg, of Hull, for improvements in the arrangements for propelling and manœvering vessels. The nature of these improved arrangements is shown in *figs.* 82. and 83. A submerged pro-

Figs. 82. and 83.

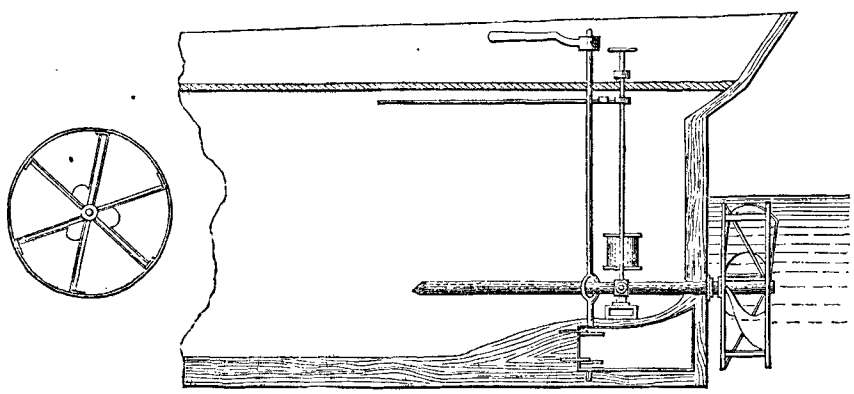

ROSENBORG'S PROPELLER.

peller, with six paddles or blades, is placed at the stern of the vessel, and the propelling surface is disposed circumferentially, as in the previous projects of Bernouilli, Delisle, Ericsson, Fraissinet, Haddan, and Blaxland. The propelling blades are not portions of a true screw, but are bent to a certain curve, the nature of which is not very clearly explained, but the design appears to form the propeller with an expanding pitch.

CAPTAIN GEORGE BEADON. 1845.

On the 29th July, 1845, a patent was taken out by George Beadon, commander in the Royal Navy, for improvements in propelling vessels and carriages, in raising and drawing off water, and in accomplishing other similar mechanical operations. The improved method of propelling vessels consists in the use of a screw of one or other of the configurations represented in *figs.* 84, 85, and 86., and an improved method of shipping and unshipping the screw is also described. The external form of the screw, represented

in *fig.* 84., is almost identical with that patented by Dallery in 1803; but the central portion of the screw is cut away, as in the screws of Delisle, Ericsson, Fraissinet, and Haddan,—all projected or patented before this time. *Fig.* 85. represents two propelling surfaces supported at any suitable distance from the centre of the shaft by means of spiral arms; and *fig.* 86. represents a form of screw in which the central portion, instead of being cut away, is filled up by the introduction of a cylinder, upon which the helical propelling blade is wound. The arrangement for shipping and unshipping the screw is described as being applicable to the case of propellers situated in the quarters, and the arrangement substantially consists in the introduction of strong vertical guides, which direct the ascent of the screw in a proper manner, when hove upwards by suitable chains.

Figs. 84, 85, and 86.

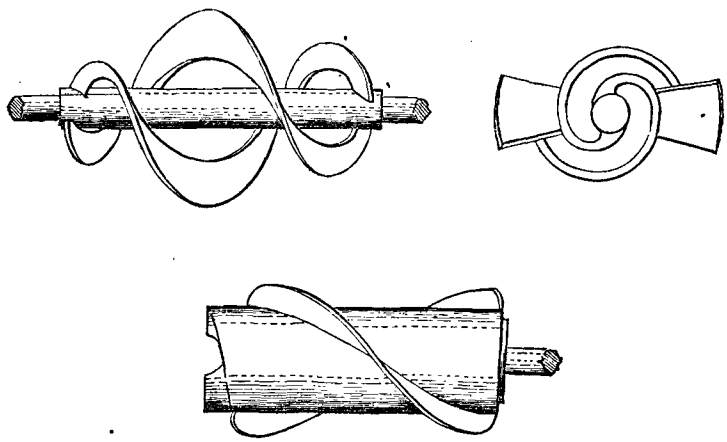

BEADON'S SCREW PROPELLERS.

The arrangement of a propelling surface wound upon a drum or cylinder resembles the arrangement patented by Lyttleton, in 1794, so that there is not much in this patent that is new: nevertheless, it displays a sagacious ingenuity, and a very distinct conception of the objects which it is desirable to fulfil in contriving an efficient propeller.

CHARLES H. J. FORRET. 1845.

On the 4th August, 1845, a patent was taken out by Charles Henry Joseph Forret, of London, for a new form of screw, which he terms "Devaine's Screw," being a communication from a foreigner abroad. Of this screw, which is constructed on the principle of an increasing pitch, three forms are represented in *figs.* 87, 88, and 89.; but the principle of the increasing pitch has been anticipated by several previous inventors, and in other respects the arrangement represents that patented by Rennie in 1839.

Figs. 87, 88, and 89.

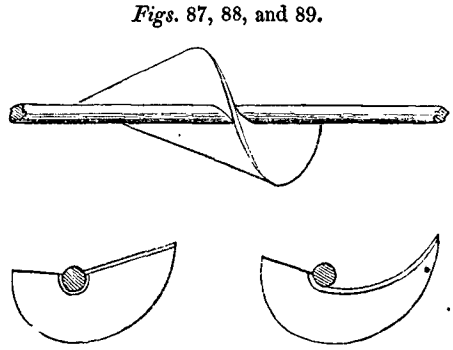

FORRET'S SCREW PROPELLER.

THOMAS OXLEY. 1845.

On the 22nd August, 1845, a patent was taken out by Thomas Oxley, of London, civil engineer, for improvements in constructing and propelling vessels. One of these improvements is an arrangement for enlarging the diameter of a screw propeller at any time such an operation may be deemed advisable, and the mechanical expedients suggested for this purpose are represented in *fig.* 90. Each propelling blade is so constructed that it may be drawn out in the manner of a telescope, or sliding shutter; and this sliding action is accomplished, when necessary, by means of pinions, in the position of the screw shaft, which engage racks attached to the sliding portions of the screw blades, and the sliding portions of the blades are thus moved radially inward or outward, according as the pinion may be turned in either direction.

Fig. 90.

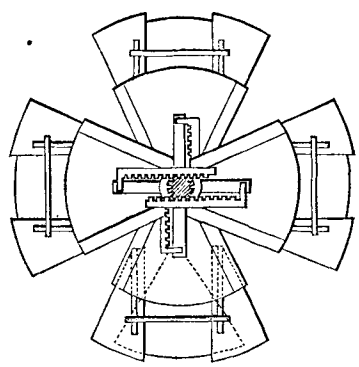

OXLEY'S EXPANDING PROPELLER.

STEPHEN R. PARKHURST. 1845.

On the 17th November, 1845, a patent was taken out by Stephen Richard Parkhurst, of Liverpool, machinist, for an improved method of propelling vessels. This method of propelling does not come properly under the denomination of a screw propeller; nevertheless, its general character may here be described. Two wheels, resembling small paddle-wheels, are laid on their sides, one at each side of the vessel, and these wheels are indented into the vessel so that only a small portion of the periphery of each projects beyond it. The shafts are vertical, and when the wheels are put into revolution those floats only which project beyond the side of the vessel act upon the water, and the vessel is forced forward by the reaction thus produced. The form of this contrivance resembles that of Bodmer, described in page 41., and the only respect in which a propeller of this kind resembles the screw is in being totally submerged.

CHRISTOPHER D. HAYES. 1845.

On the 10th December, 1845, a patent was taken out by Christopher Dunkin Hayes, of Bermondsey, for improvements in the apparatus for propelling and steering vessels. The most material part of these improvements is represented in *figs.* 91, 92, and 93., and they constitute a more complete arrangement for carrying out the principle of a variable pitch, propounded in Mr. Hayes' previous patent of 1844.

Fig. 91. represents a screw propeller at the stern of a vessel. It is suspended in a frame which, when the screw shaft is drawn back, may be raised out of the water by means of pinions, which engage racks on the sides of the frame. The mechanism for changing the angle of the propeller blades is enclosed in a hollow boss. Holes for receiving the ends of the propeller arms are made in this boss, and the ends of the propeller arms are made of a cylindrical form, as represented in *fig.* 92. To the ends of these arms, situated within the boss, appropriate levers are attached, by means of which the arms may be turned round; and the motion of the levers is governed by a small shaft passing through the centre of the screw shaft, by means of which the propelling blades may be set at any angle that is required. Should it be found desirable at any time to disuse the propeller, it may be so set that the blades come into the same line as the keel; and sliding shutters, shown in *fig.* 93., may then be let down upon each side of the stern-post, so as to enclose the screw in the box, and thereby place the vessel in the same position, as regards sailing efficiency, as if a screw had not been introduced. I have already mentioned that the power of changing the angle of the screw does not confer any important advantages so long as the screw is in revolution; and propellers constructed upon the principle of a variable angle must necessarily be weaker and more subject to derangement than screws of the common description, the blades of which are fixed. Since too if the vessel be put under sail, the screw, by being disengaged from the engine, will revolve in the manner of a patent log, and will present very little impediment to the vessel's progress, it hardly appears necessary to make the arms moveable to accommodate the vessel when under sail. The plan of suspending the screw in a metal frame, which may be drawn up vertically out of the water when the screw shaft is withdrawn, is judicious, and this is the arrangement now generally adopted in screw vessels, the screws of which are made to lift. In merchant vessels, however, it will generally suffice if the screw is so made that it can revolve freely when the vessel is under sail.

Figs. 91, 92, and 93.

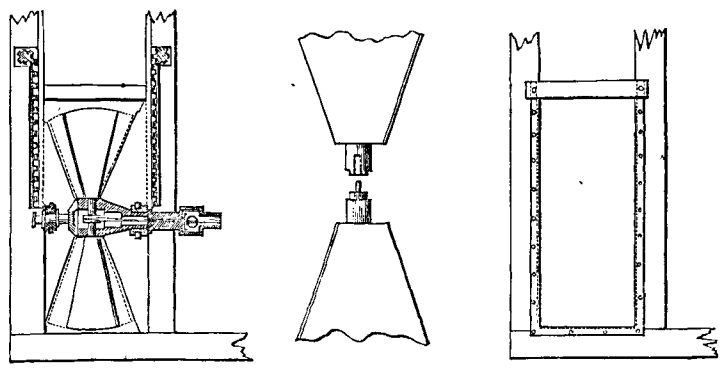

HAYES'S ARRANGEMENT FOR VARYING THE ANGLE OF PROPELLER BLADES.

JOHN PENN. 1846.

On the 25th December, 1846, a patent was taken out by John Penn, of Greenwich, engineer, and William Hartree and John Matthew, also of Greenwich, engineers, for improvements in steam engines, and in machinery for propelling vessels. One of these

improvements has for its object the diminution of the wear and friction at the point where the thrust of the screw shaft is taken by the vessel. The propeller shaft, at the same time that it is turning rapidly round, must press endways, owing to the reaction of the screw upon the water; and this end thrust must be received upon some suitable fixed point within the vessel, and by the pressure exerted upon this fixed point the vessel is forced through the water. The severity of the thrust upon the end of the shaft, combined with the friction arising from its rapid rotation, produced in the earlier screw vessels a rapid wear of the surfaces in this part, and also a great liability to heat; and Mr. Penn proposed to remedy the evil by bringing a new surface perpetually into contact with the end of the shaft. This object was accomplished by applying a flat disc of hardened steel, in a vertical position, to the end of the shaft, so as to receive the thrust; the disc was larger in diameter than the propeller shaft, and was securely fixed to the flat side of a cog-wheel placed eccentrically to the propeller shaft. To this wheel and disc a slow rotatory motion was given, whereby a fresh rubbing surface was continually presented to the end of the shaft. The remaining part of this patent has reference to various improvements in the construction and arrangement of marine steam engines, among which is a new form of trunk engine, since introduced by Mr. Penn for giving motion to the screw without the intervention of gearing; and the operation of this engine has been attended with signal success. The engines of H. M. Steam Vessels "Arrogant" and "Encounter," which are constructed upon this principle, will be found represented among the plates of screw engines which illustrate the present work.

SAMUEL SEAWARD. 1846.

On the 12th January, 1846, a patent was taken out by Samuel Seaward, of Limehouse, engineer, for improvements in the steam engine, and in machinery for propelling. As regards the improved machinery for propelling, the main novelty consists in a new mode of attaching or disengaging the propeller, so that it may be easily shipped, and also easily detached and lifted out of the water. The arrangement proposed is represented in *figs.* 94, 95, 96, and 97.; and the screw shaft, it will be remarked, instead of piercing the

Figs. 94, 95, 96, and 97.

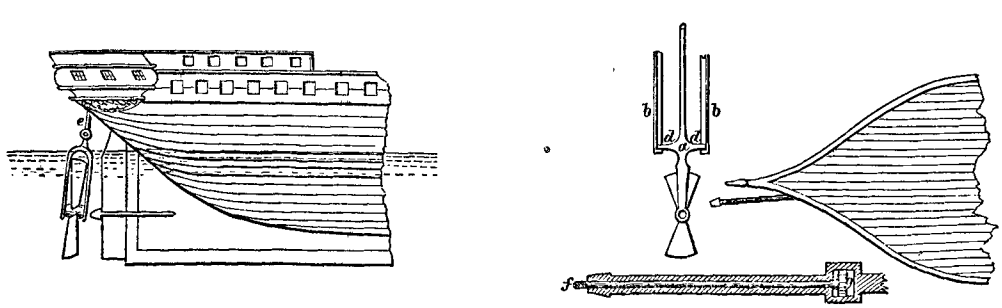

SEAWARD'S ARRANGEMENT OF SCREW PROPELLER.

stern post, comes out at one side of it. The screw is embraced in a frame, resembling a large sugar tongs, as shown in *fig.* 94.; and from the top part of this frame a lever (*e*) projects upwards, by means of which the movements of the frame are properly controlled. In *fig.* 95. a back view of this frame is given; *a* being the frame, *dd* pivots on which it swings, and *bb* guides or hangers, by which the pivots *dd* are supported. *Fig.* 96. shows the position of the shaft relatively with the stern post; and in *fig.* 97. is represented the mode of attaching the propeller to the shaft. The portion of the shaft protruding through the vessel is made hollow, with a long bolt passing through its centre; and the head of this bolt consists of a cog-wheel, which may be forcibly turned round by a suitable purchase, while the point of the bolt is tapped into the eye of the propeller. In shipping the screw, the sugar-tong frame containing it is first dropped down between the guides, until the boss of the screw is opposite to the end of the shaft. The long bolt within the shaft is then turned round, whereby the screw is drawn upon the conical neck of the shaft with great force, and held firmly thereon. Arrangements for unshipping the screw, much superior to this, have since been adopted by Messrs. Seaward in their practice; and, although the plan of bringing the screw shaft out at the side of the stern post has been imitated in several succeeding patents, it has never met with any considerable adoption.

JOSEPH MAUDSLAY. 1846.

On the 13th January, 1846, a patent was taken out by Joseph Maudslay, of London, engineer, for improvements in propelling. These improvements, for the most part, resemble those patented the day before by Mr. Seaward, as will be seen by a reference to *figs.* 98, 99, and 100; but Mr. Maudslay includes in his patent a coupling-box, for enabling the screw to be disengaged from the engine, and also a brake for controlling the movements of the propeller. When it is required to unship the propeller, the shaft is drawn a little inboard, so as to clear it of the hole in the propeller boss, in which it fits. The frame carrying the screw is then raised by the aid of the capstan or other convenient purchase; — the vertical position of the frame being maintained by a strong guide bar, securely fixed to the counter.

Figs. 98, 99, and 100.

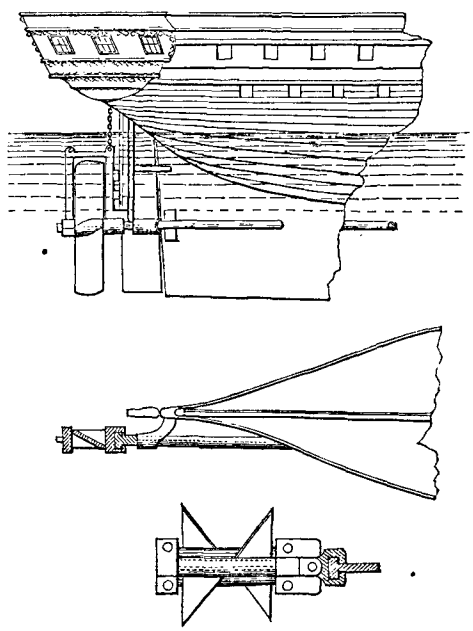

MAUDSLAY'S ARRANGEMENT OF SCREW PROPELLER.

PETER TAYLOR. 1846.

On the 20th January, 1846, a patent was taken out by Peter Taylor, of Hollingwood, near Manchester, for improvements in the machinery for propelling vessels, the nature of which will be apprehended by a reference to *fig.* 101. Two shafts, with four double-bladed screws upon each, are placed at the stern of a vessel, and are driven in opposite directions by means of gearing. The arrangement appears to be a change for the worse upon his previous patent of 1838, described at page 27.

Fig. 101.

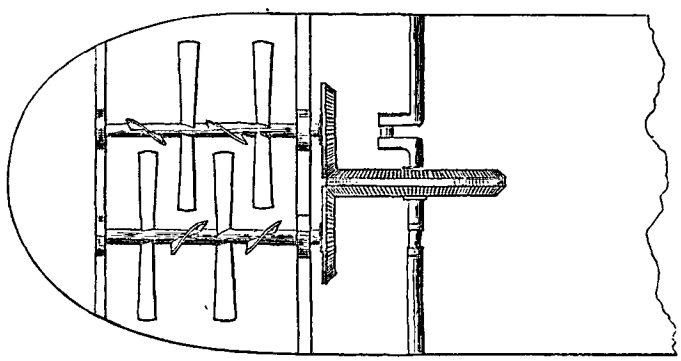

TAYLOR'S ARRANGEMENT OF SCREW PROPELLER.

THOMPSON AND WRIGHT. 1846.

On the 25th February, 1846, a patent was taken out by George Alexander Thompson, of London, and Joseph Wright, also of London, mechanic, for improvements in propelling vessels. The principle of these improvements consists in the ejection of water from the stern; and the plan therefore hardly comes into the category of screw propellers; but being a submerged propeller, the general features of the project may be briefly explained. The proposed arrangement of machinery is represented in *figs.* 102, 103, and 104. The water is drawn in at the bow, through suitable pipes, and discharged at the stern; and the pipes may either be arranged as shown in *fig.* 102., or as shown in *fig.* 103. The apparatus by which the water is put in motion, is represented in *fig.* 104.; and it is a less eligible apparatus for the purpose than many other expedients previously employed.

Figs. 102, 103, and 104.

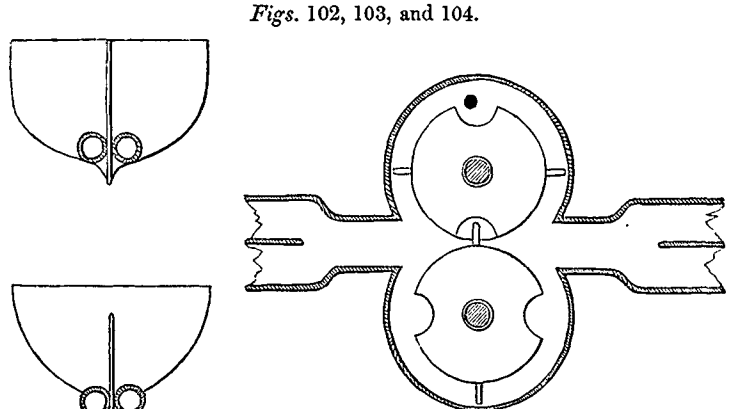

THOMPSON AND WRIGHT'S METHOD OF PROPELLING VESSELS.

It has already been mentioned, that the attempt to propel vessels by forcing water out at the stern has been very often made or suggested during the last two hundred years, and in this joint patent of Messrs. Thompson and Wright there is neither novelty of principle, nor eligibility of apparatus.

JOHN SAMUEL TEMPLETON. 1846.

On the 27th February, 1846, a patent was taken out by John Samuel Templeton, of Kensington, for improvements in propelling carriages upon railways, and improvements in propelling vessels. His improved propeller for vessels consists of a flat blade, coiled round an axis, as shown in *figs.* 105. and 106., so as to form an expanding cone or conoid, or, as the patentee terms it, a "Conoidal Volute." It does not very clearly appear what benefit is expected from this configuration.

Figs. 105. and 106.

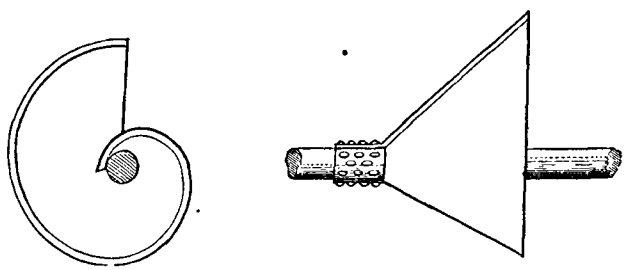

TEMPLETON'S CONOIDAL VOLUTE PROPELLER.

JAMES MONTGOMERY. 1846.

On the 26th May, 1846, a patent was taken out by James Montgomery, of London, for an improved method of raising the screw propeller out of the water. In one of the arrangements he describes, an opening is made through the deck of the vessel, over the screw, and the screw is carried in a frame suspended by wire ropes, or by chains which pass over pullies and are attached to a drum upon the propeller shaft. By throwing this drum into gear with the engine, the frame and screw are immediately lifted out of the water, and are raised up through the hole in the deck. Another of the arrangements described, is represented in *figs.* 107. and 108. Here the screw shaft passes through the stern-post, and also through the rudder; and the rudder is on the throttle-valve or balance principle, being hung upon a spindle which passes through it from top to bottom, in the middle of its breadth. It is stated that by this arrangement the screw can be shipped and unshipped with so much facility, that a vessel may carry an assortment of screws of different sizes with her, which may be shifted at sea; so that she may at all times have that form of propeller in operation which is best adapted to the work that is to be done. This system, however, of changing the propeller at sea does not appear likely to obtain favourable acceptation in practice.

Figs. 107. and 108.

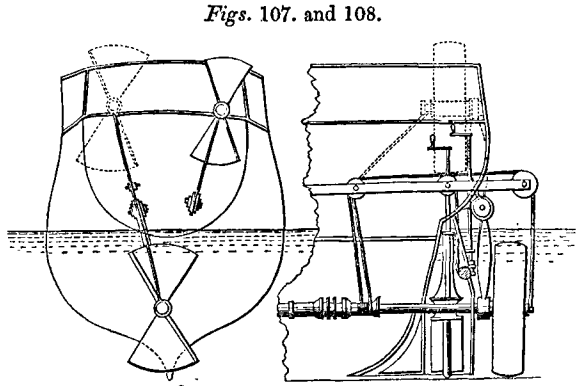

MONTGOMERY'S MODE OF RAISING THE SCREW PROPELLER.

JOHN BUCHANAN. 1846.

On the 15th August, 1846, a patent was taken out by John Buchanan, of London, for various improvements in vessels and machinery, one of which is for propelling vessels by means of a submerged propeller placed at the stern. The configuration of this propeller is shown in *figs.* 109, 110, and 111.; and the propelling-blade, it will be remarked, is a flat plate, like the tail of a weather-cock, which is enabled to swivel to a certain extent on its axis, the end of the blade being circular and fitted into a round hole in the propeller shaft, to permit this action to take place. It follows from the arrangement here set forth, that when the vessel is under sail, the propelling-blade, by being dragged through the water, assumes the line of the keel; whereas, if the propeller shaft is turned round, the blade is deflected sideways until it comes in contact with the end of a notch in the shaft, seen more plainly in *fig.* 110.; and in that position the blade acts as an efficient propeller. It will be obvious, on considering the action of this propeller, that the vessel will be urged forward, in whatever direction the propeller shaft is turned; but to enable the vessel to be backed, the portion of the shaft nearest the stern is made hollow, so that a rod may be pushed through its centre, and the end of this rod enters a hole in the neck or pivot on which the propelling-blade turns,—thereby fixing it in such a position as to enable the vessel to be backed. The bearings of the propeller shaft in the stern and rudder-posts are suspended by springs, with the view of taking off the jar or tremor, and the portion of the propeller shaft revolving in the water at the stern is enlarged, so as to form a boss, which presses against the stern-post, and thereby takes all thrust off the shaft. The shaft where it passes through the stern is enclosed in a pipe a little larger than the shaft, and the intervening space is filled with oil, fed from a sufficient head to enable the oil to work its way out against the pressure of the water, and thereby lubricate, in an efficient manner, the surfaces which receive the thrust. The patentee, although he only shows one propelling blade in the drawings which accompany his specification, claims the

Figs. 109, 110, and 111.

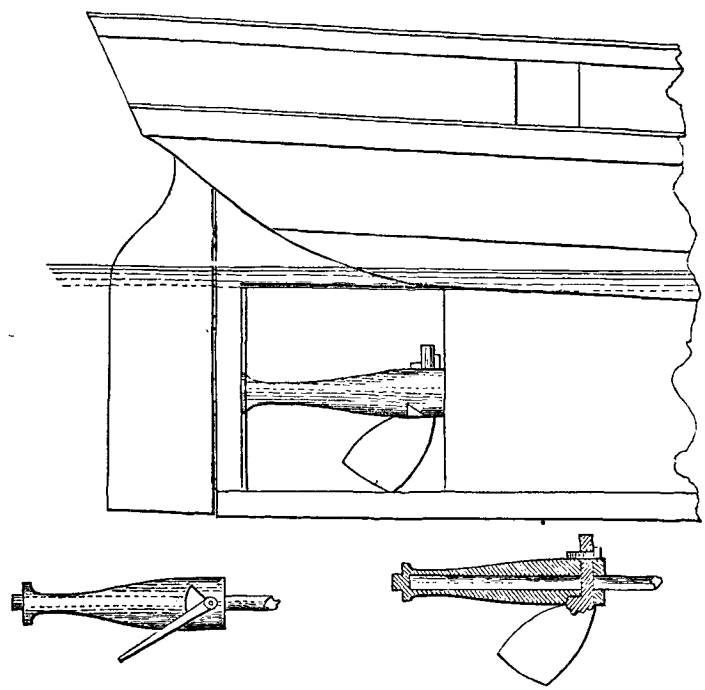

BUCHANAN'S SWIVELLING PROPELLER.

right to use two or more, if he finds it advisable. It does not appear probable that any of the expedients herein described will come into use; nevertheless, they are marked by a high degree of ingenuity, and by an apparent familiarity with mechanical arrangements.

WILLIAM HENWOOD. 1847.

On the 4th May, 1847, a patent was taken out by William Henwood, of Portsea, naval architect, for improvements in propelling vessels, and in steam vessels. These improvements, so far as they relate to screw vessels, are twofold, and consist first, in an improved arrangement of the rudder and propeller, and, secondly, in the adoption of such a configuration of hull as will diminish the pitching motion, and thereby cause the screw to be lifted less out of the water. The proposed arrangement of rudder and propeller is represented in *fig.* 112. The rudder is placed in the deadwood and before the screw,—a spindle of adequate strength being continued upward to the deck, by means of which the rudder may be moved. The screw is hung in a frame abaft the sternpost, the frame itself being directed into its place and retained there by appropriate guides. Upon these guides, it is stated, a temporary rudder may be hung by removing the propeller, should the usual rudder happen to be carried away.

Fig. 112.

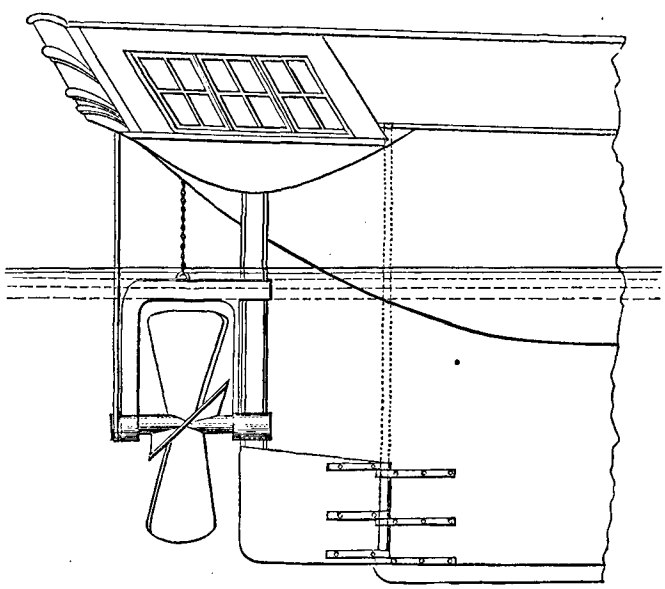

HENWOOD'S ARRANGEMENT OF RUDDER AND PROPELLER.

The improvement in the form of hull, so as to obviate pitching, is to be accomplished by a suitable adjustment of the fore and after bodies to one another, both as regards capacity and form. The cubical content of the after body of the vessel, measured from a vertical transverse plane through the centre of gravity of the vessel, must be made equal to the cubical content of the fore body, measured from the same plane; and the superficial areas of the displacement of the fore and after bodies, at every different line of floation, should also be equal to each other, measured from the same vertical plane. There is not much originality in this patent. Perkins in his patent of 1824, and Rosenborg in his patent of 1845, had the rudder before the propeller, or in the deadwood, and the adoption of such a shape in screw-vessels, as will make the pitching action as small as possible, has always been a consideration kept in view by naval architects of respectable proficiency.

CONRAD H. GREENHOW. 1847.

On the 4th May, 1847, a patent was taken out by Conrad Haverkam Greenhow, of North Shields, for improvements in propelling vessels; but his plan comes rather under the head of expedients for propelling by forcing water out at the stern, than under the head of expedients for propelling by a screw. The device, nevertheless, is represented in *figs.* 113, 114, and 115., and in its operation it somewhat resembles the expedients of Thompson and Bessemer; but here the wheel shaft is horizontal. Two wheels like paddle wheels, but armed with helical blades, are placed in the position shown in *fig.* 113., completely beneath the water, and with their impelling shaft at right angles with the keel. A case or box is formed on each side of the keel, just abaft the termination of the bilge keel; into this case or box the wheels are introduced, and by their revolution they are to propel the vessel. It will be seen by *fig.* 114., that the blades of the wheels which at the circumference run at an angle of 45 degrees with the shaft, are at the centre coincident with it. The benefit of these arrangements, or even the patentee's idea of it, is not very intelligible; the project being by no means invested with obvious advantage, and being moreover obscurely described.

Figs. 113, 114, and 115.

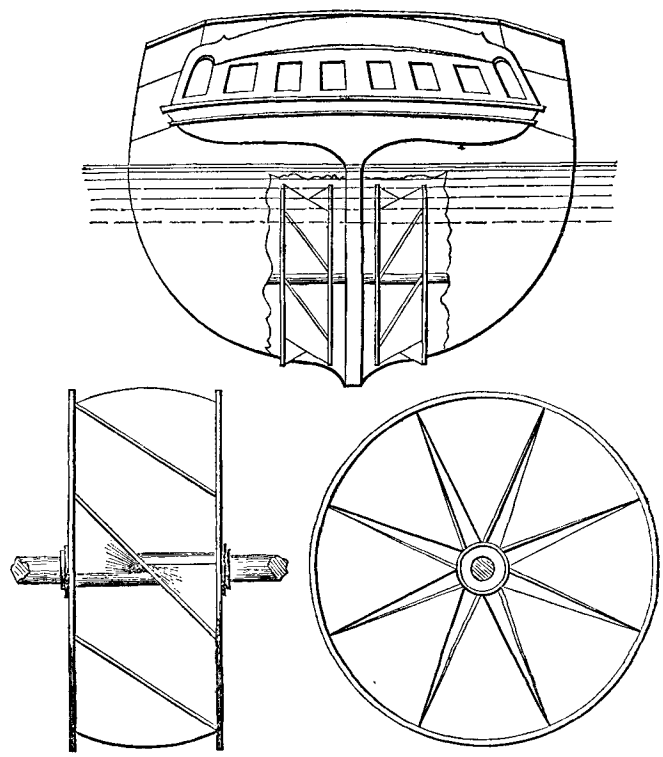

GREENHOW'S METHOD OF PROPELLING VESSELS.

JOHN MACINTOSH. 1847.

On the 22nd June, 1847, a patent was taken out by John Macintosh, of London, for improvements in steam engines and improvements in propelling; and of these improvements the one which bears most on the present question is a new kind of screw propeller formed with flexible blades. The leading idea of this contrivance is the same as that set forth in Buchanan's patent, taken out in the previous year; but instead of the propelling blade being left free to move towards either side until it comes against

a shoulder or stop, it is so constructed that the blade is itself a spring, which can only be deflected at all by the application of power, and then the amount of deflection will be proportional to the amount of power applied. In *figs.* 116. and 117. an edge view

Figs. 116. and 117.

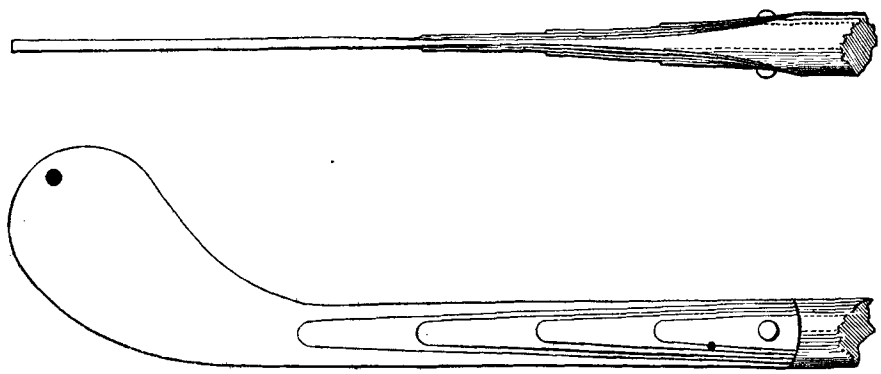

BLADE OF MACINTOSH'S FLEXIBLE PROPELLER.

and a side view of one of Macintosh's flexible propeller blades are given. Two blades of this kind stand out from the propeller shaft, forming with it an angle of about 45 degrees, and constituting a propeller resembling that patented by the Earl of Dundonald, in 1843, and of which a figure is given at p. 35. Macintosh's blades, however, are quite flat, and stand in a line with the shaft; they are formed of steel and are built up of several thicknesses, after the fashion of a coach spring. When the vessel is under sail, and the propeller is not in action, the blades offer no obstruction to the water, since they lie in the line of the keel, and are merely drawn forward in the manner of a straight plate of iron, or as any fish's tail would be in which there was no lateral motion. But when the propeller shaft is turned, the action of the water upon the side of the blade immediately twists it into the form of a screw, and when in that form it acts as an efficient propeller. The form of the screw will obviously depend upon the strength of the blade to resist twisting, and the amount of twisting force put upon it; and these conditions may be so regulated as to give any form that is desired. It is also obvious that a propeller made upon this plan will not back the vessel; for if the engine be turned in one direction the blades are twisted into a right-hand screw, and if the engine be turned in the other direction the blades are twisted into a left-hand screw, but in each case the vessel is propelled ahead. To enable the vessel to be reversed, an arrangement of the propelling blades has to be adopted, which permits them to be shifted from their usual position into the position indicated by the dotted lines, *fig.* 118.; and here an amount of complication is introduced which counterbalances the benefits of the system. An elastic propeller is certainly a very elegant expedient;

it can no doubt be made efficient, probably somewhat more efficient than a rigid propeller can be, and, but for the necessity of backing, it would be exceedingly simple. To back, however, the arms must be made moveable, since it is not by reversing the engine, but by reversing the position of the blades, that the operation of backing becomes accomplishable. An elastic screw with moveable arms is quite as complicated and objectionable an arrangement as a common screw with moveable arms; and the common screw with moveable arms may be easily adjusted to any pitch, and may have the blades

Fig. 118.

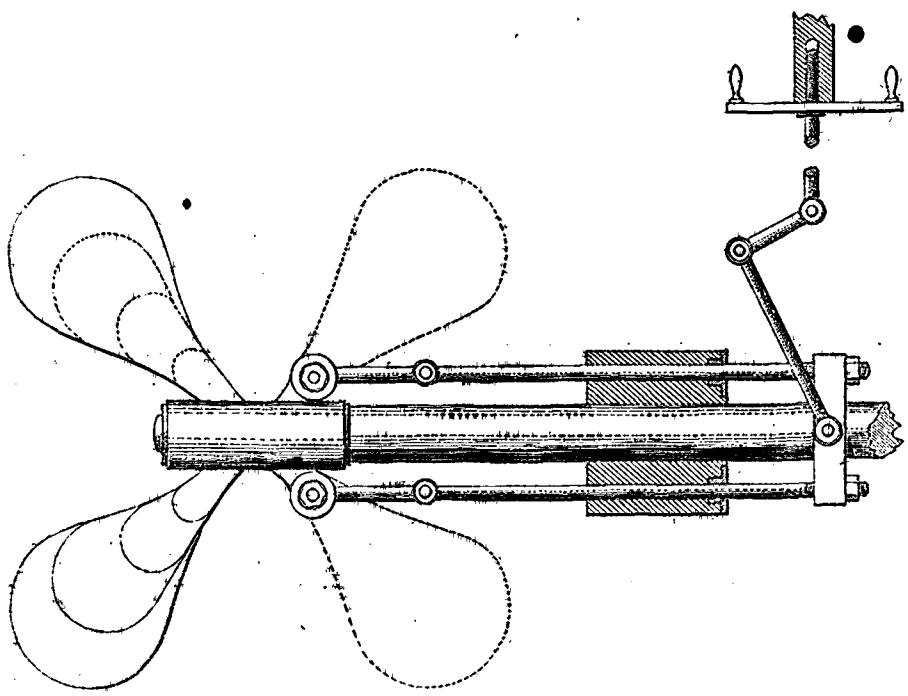

MACINTOSH'S FLEXIBLE PROPELLER.

set in a line with the keel when the vessel is under sail. Upon the whole, therefore, it does not appear probable that this kind of screw will meet with any considerable adoption, unless some mode of reversing the vessel without involving the complication of moveable arms is found out.

SIR SAMUEL BROWN. 1847.

On the 7th October, 1847, a patent was taken out by Sir Samuel Brown, captain in the navy, for improvements in propelling and steering vessels, and improvements in the mariner's compass. That part of the patent relating to propelling prescribes the

use of two propellers placed one behind the other at the stern of a vessel,—one being placed in the deadwood and the other abaft the stern-post, or in a space formed by introducing a false post abaft the ordinary stern-post. The use of two propellers on each side of the rudder-post, and two propellers on each side of the stern, are also recommended, or one propeller may be placed on each side of the rudder-post and one on each side of the stern, and these propellers are to work in combination with one another. If propellers be used at both ends of the ship, they may be driven, it is stated, by the same shaft or by different shafts. There is nothing of novelty in the arrangements here described, and the patent has been enrolled in an imperfect state, repeated reference being made to a drawing which is not given.

GARDINER STOW. 1848.

On the 7th January, 1848, a patent was taken out by Gardiner Stow, of New York, for improvements in propelling vessels. Upon each side of the vessel a screw propeller, formed in the manner represented in *figs.* 119. and 120., is to be placed; and

Figs. 119. and 120.

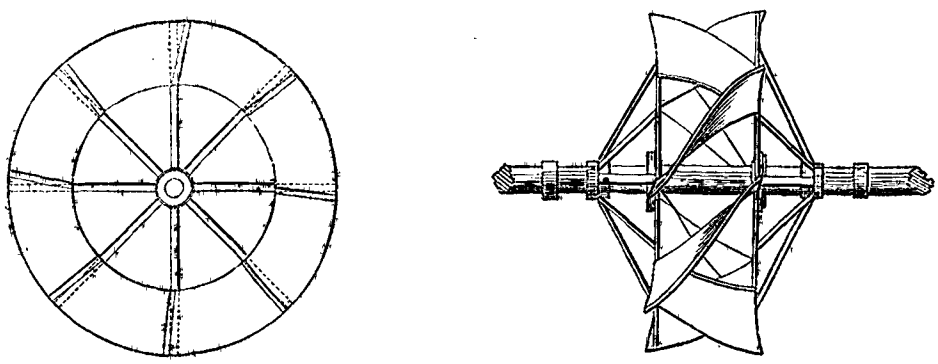

STOW'S PARTIALLY IMMERGED SCREW PROPELLER.

these propellers are not to be totally immerged, but are only to dip into the water to about one-seventh of their diameter. This arrangement resembles one of the expedients for propelling vessels proposed by Paucton, in 1768. It also resembles the plan proposed by Fraissinet, in 1838, and has some similarity to Mr. David Napier's arrangement of stern-wheels, in 1841. None of the arrangements of partially immersed screws, working at the sides of the vessel, which have yet fallen under my observation, are free from objection, or are such as I could recommend to be adopted in practice. Nevertheless, in the case of sea-going steam-vessels with a variable immersion, I believe that large screws operating upon this principle will be found to give a better result than ordinary paddle-

wheels. The efficacy of such screws will be the same, whether they are much or little immersed, and I see no difficulty in driving them by means of connections of a simple and substantial character.

ROBERT FOWLES. 1848.

On the 14th February, 1848, a patent was taken out by Robert Fowles, of North Shields, for a method of propelling vessels; and although not falling under the head of expedients operating on the principle of the screw, the project may be here briefly described. The form of this propelling apparatus is shown in *figs.* 121. and 122., and the action resembles that of a fish's tail. One or more flat blades, in form resembling

Figs. 121. and 122.

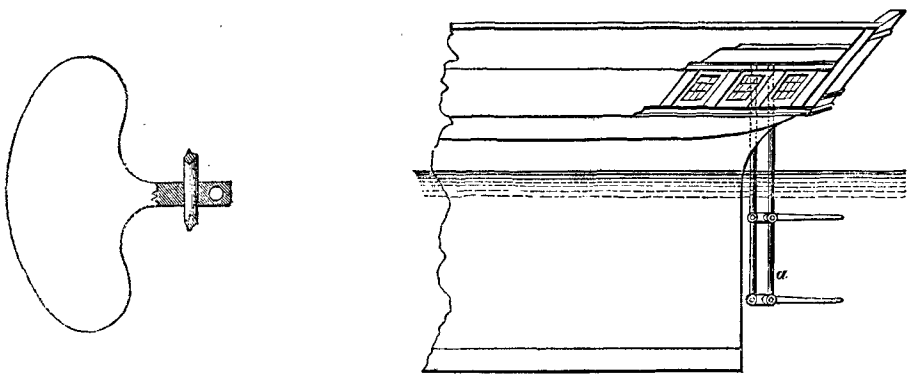

FOWLES'S FISH-TAIL PROPELLER.

fig. 121., are set at the stern of a vessel, in the manner shown in *fig.* 122. Behind the stern-post a strong iron upright is placed, to which the ends of the propeller blades are jointed, and a rod *a*, which is moved up and down by the engine, is jointed to the nicks of the blade, so that it communicates to them its own reciprocating motion. Another arrangement, in which the propeller blades are moved sideways, is also described in the specification of this patent; and, by turning the upright which supports the propelling blades partly round by means of a tiller, the blades may be made to steer the ship. In order that the blades may have a similar elasticity to that of a fish's tail, they are proposed to be constructed of steel ribs, covered over with gutta percha, or vulcanised india rubber. If the vessel to be propelled is large and heavy, the patentee prefers to use two or more propelling blades operating in the same vertical line, rather than to employ a single propelling blade of larger size.

JOSEPH MAUDSLAY. 1848.

On the 8th March, 1848, a patent was taken out by Joseph Maudslay, of London, engineer, for improvements in obtaining motive power; one of which improvements is an improved form of screw propeller, the blades of which may be turned round so as to bring them into a line with the keel when the vessel is under sail. This propeller is represented in *figs.* 123, 124, of which 123. is a side elevation, and 124. is a bird's-eye view. *a a*, are the

Figs. 123. and 124.

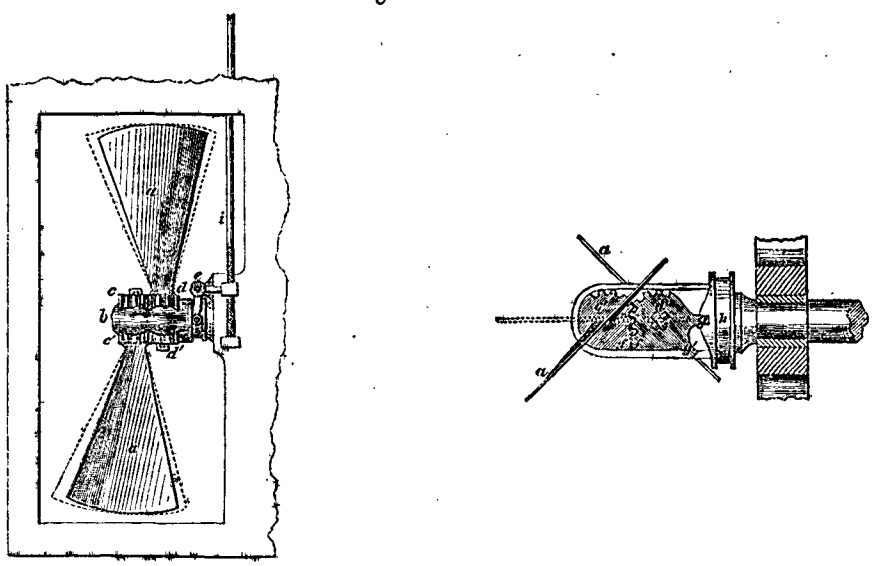

MAUDSLAY'S FEATHERING SCREW PROPELLER.

propelling blades, which are formed with cylindrical necks which pass into holes in the boss *b*. *c c'*, *d d'*, are toothed collars upon the necks of the propelling blades, and gearing with one another so that the propelling blades turn simultaneously together on their necks until arrested by the stop *f f*. *g g'*, are projecting lugs which fit into a notch in the sliding clutch *h*, which clutch is moved endways upon the shaft by a bell crank lever, *e*, to which motion is given by a screwed rod *i*, which passes up to the deck. Each blade is formed with a greater area abaft the neck than before it, so that when the propeller is put into revolution the blades assume of themselves their right position by being brought up to the stop; or should the vessel be proceeding under sail alone, the blades will spontaneously assume the line of the keel, and may be locked in that position.

MOSES POOLE. 1848.

On the 26th May, 1848, a patent was taken out by Moses Poole, for an improved method of propelling vessels; the improvement consisting in the use of a new kind of

screw, called the "Boomerang Propeller," communicated to the patentee by Lieutenant Colonel Sir F. Livingstone Mitchell, residing abroad. The idea of this propeller is taken from the Boomerang, a remarkable species of missile in use among the savages of Australia, which is substantially a bent blade so warped as to form a portion of a screw. This propeller is represented in *figs.* 125, 126, 127, and 128, and it is to be so constructed that the centre of the propeller shaft shall be at the centre of gravity of the propelling blades, any number of which blades may be set round the axis that appears expedient. The main purpose of this form of propeller appears to be to enable the propelling surfaces to act upon the water without involving the obstruction, or choking action, incident to the use of a common screw, the central part of which exerts but little propelling effect, while the resistance it occasions is considerable. This intention, however, is equally fulfilled by the previous projects of Delisle, Ericsson, Fraisinet, Haddan, &c., whose various forms of propeller, moreover, are not so objectionable in other respects.

Fig. 125.

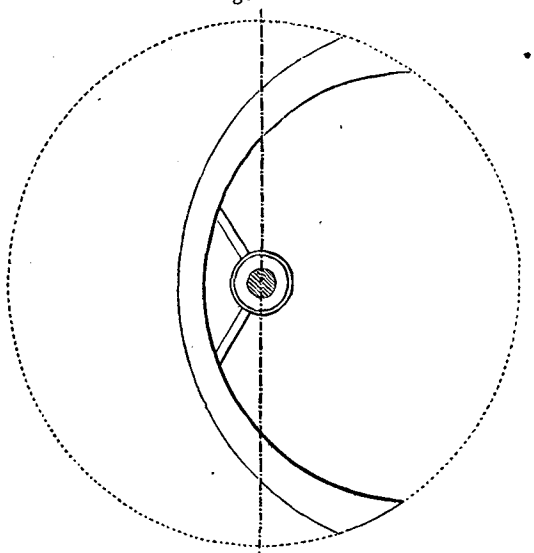

POOLE'S BOOMERANG PROPELLER.

Figs. 126, 127, and 128.

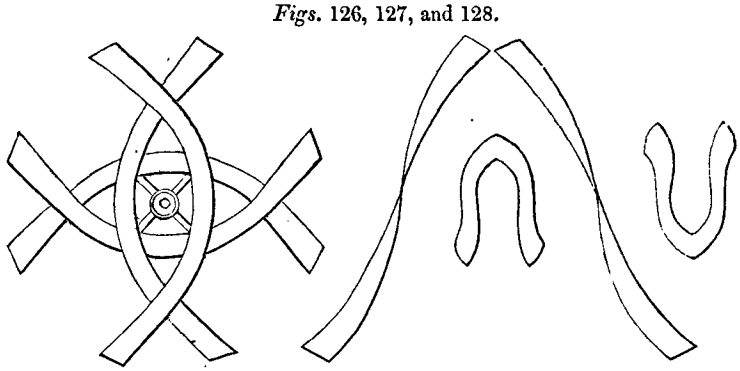

POOLE'S BOOMERANG PROPELLER.

JOSHUA T. BEALE, 1848.

On the 13th of June, 1848, a patent was taken out by Joshua Taylor Beale of Greenwich, engineer, for various improvements in steam engines and other mechanisms, and one of these improvements is an improved propeller for steam vessels. This propeller, which the patentee calls the bird's wing propeller, is represented in *figs.* 129, 130, and 131, and the manner of forming the propelling blades is as follows: — Take a hollow cylinder of the same diameter as the screw, or nearly so, and of a length equal to the intended width of the propelling blades. Of this annulus cut out a sixth, and affix one end of the segment to the shaft in the manner represented in *figs.* 129 and 130. The blade is then to be so dressed as to bring it more nearly to the helical form by cutting away those parts of the blade

Figs. 129, 130, and 131.

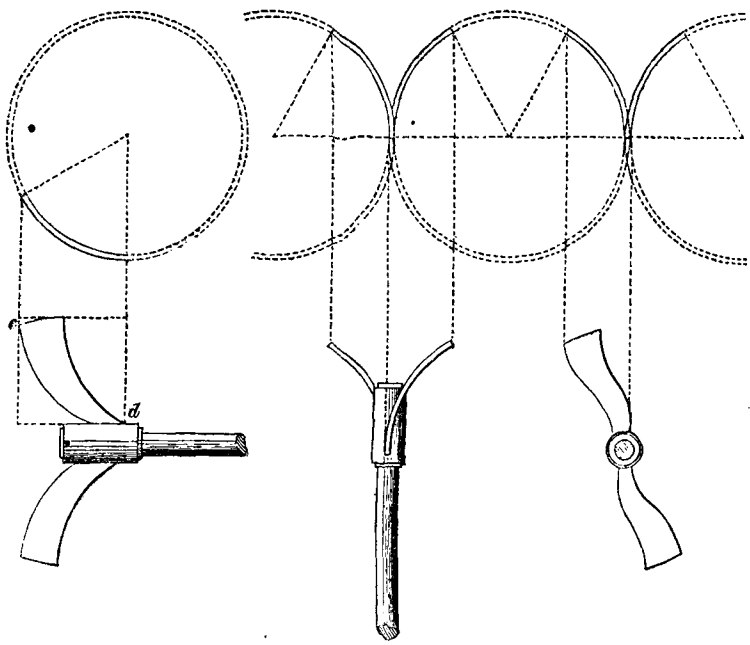

BEALE'S BIRD'S WING PROPELLER.

which stand at too great an angle upon the one side, and at too small an angle upon the other side. The cylinders from which the propelling blades are cut, are represented by dotted lines in the figures, and it is not intended that the blades shall have a uniform pitch; but the leading or entering edge *c*, is to have a pitch as much less than the mean pitch, as the following or tail edge is to have a pitch that is greater than the mean pitch. Any number of propelling blades may be used that is deemed expedient; and the patentee prefers to make the total area of the propelling blades to range between one-tenth and one-fourth of the immerged midship section of the vessel — the proper proportion being contingent upon the build of the vessel and the service she is intended to perform. Nor does the patentee bind himself to use in all cases portions of a cylinder for the propelling blades; but he proposes to employ the superficies or skin as it were of any other suitable figure when disposed in the manner described.

Mr. Beale also specifies a mode of obviating the inconvenience incident to the heavy thrust upon the screw shaft, by receiving the thrust upon rolling surfaces. A large conical collar, resembling a mitre wheel, is affixed to the shaft; and two other similar wheels supported upon short shafts lying at right angles with the screw shaft, press against the conical collar, and take the strain from it. A narrow strip of the revolving surfaces is toothed to ensure their uniform rotation; and the thrust of the screw has a tendency to force the wheels on each side of the shaft asunder — which tendency, however, is resisted by the great strength of the parts. This expedient for receiving the thrust has not met with any considerable adoption; and it is less simple than a series of contiguous collars on the shaft working in a grooved brass, which is the method of counteracting the thrust now usually employed.

WAKEFIELD PIM. 1849.

On the 25th January, 1849, a patent was taken out by Wakefield Pim, of Hull, engine maker, for improvements in propelling vessels, of which the main feature is the use of two

screws; one of which is to be placed in the bow, and the other in the stern. The patentee does not propose to introduce screws of a different shape from those commonly employed, nor does he claim any other feature of novelty except the use of a screw in the bow, acting in conjunction with a screw in the stern, as shown in *fig.* 132. But in this suggestion there is neither novelty nor invention. The application of screws at the bow and sides of the vessel, as well as at the stern, has often been proposed; and it was obvious to every one that these screws might either be used singly or in combination. Dallery, in 1803, and Millington, in 1816, both proposed to use a screw in the bow, working in combination with a screw in the stern, so that there could be no originality in such a proposal in 1849.

Fig. 132.

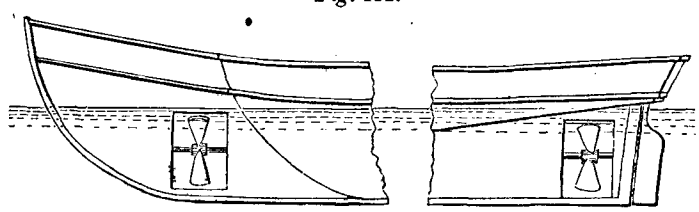

PIM'S BOW AND STERN SCREW PROPELLER.

HICK AND GAITRIX. 1849.

On the 28th February, 1849, a patent was taken out by John Hick, of Bolton, engineer, and William Hodges Gaitrix, of Salford, for improvements in steam engines, and in machinery for propelling vessels. The improvement in propelling consists in the use of a form of propeller represented in *figs.* 133, 134, and 135., and of which the peculiarity is as follows:—To the extremities of a series of arms projecting from the propeller shaft, a number of plates or paddles are attached; but these plates, instead of being flat, as in Bernouilli's propeller, or helical, as in the propellers of Delisle and Ericsson, are bent across from corner to corner, as shown by the diagonal line in *fig.* 133., which represents one plate or paddle detached. These propelling plates are arranged into a hexagon, as shown in *fig.* 134., which is an end view of the propeller. From this configuration a double benefit will ensue: first, when the water which has been acted upon by the inner edge of the blade is carried out radially by the centrifugal action of the propeller, it there encounters the outer edge of the propeller, which has a greater pitch, and a new re-action is consequently obtained from the same water. Second, the water driven out by centrifugal action from the centre to the circumference of the propeller will, when

Figs. 133, 134, and 135.

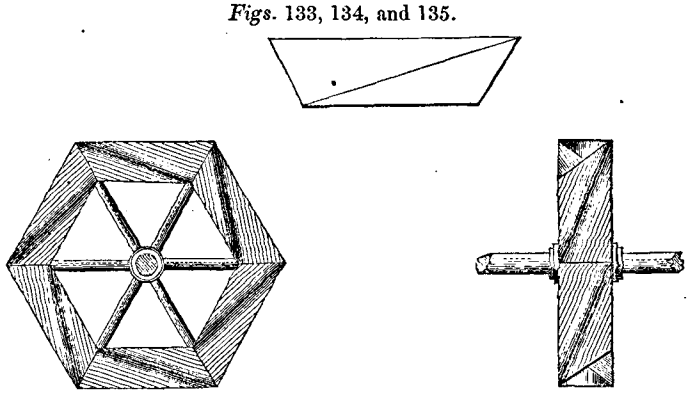

HICK AND GAITRIX'S PROPELLER.

it encounters the step or bend in the plate, necessarily contribute to turn the propeller round; and a portion of the power expended in giving centrifugal motion to the water will thus be recovered. Both of these objects are proper objects to pursue; but they appear to me to be more conveniently attainable by the use of the form of propeller proposed by the Earl of Dundonald, in 1843, or by Mr. Hodgson, in 1844; for those screws correct the centrifugal action of the water, and they may be also formed with an increasing pitch. This may be done either by winding an inclined plane round a spire, as recommended by Rennie, or a curved line round a cylinder, as proposed by Emerson, Bourdon, Tredgold, and Woodcroft.

DUGDALE AND BIRCH, 1849.

On the 29th May, 1849, a patent was taken out by John Dugdale and Edward Birch, of Manchester, tool and machine makers, for improvements in constructing and propelling vessels. These improvements, as they are called, consist in such a configuration of the bottom of the vessel, that it resembles an arch in the cross section, thereby forming a channel, extending from stem to stern; and in this channel, several screws of progressively increasing diameters, as they come nearer to the stern, are to be placed as shown in *fig.* 136.

Fig. 136.

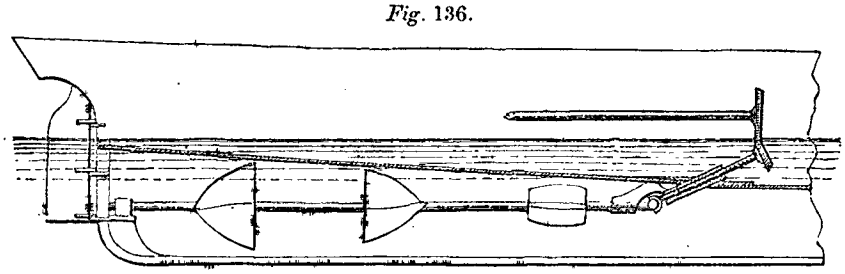

DUGDALE AND BIRCH S PROPELLER.

There is nothing new in the form of the propellers proposed to be employed, and the method of placing a screw in an arch in the bottom is one of the schemes mentioned by Marestier in 1824, as having been before that time projected in America. The advantages of such an arrangement are by no means apparent, and Messrs. Dugdale and Birch must be prepared with some project less remarkable for crudity, before they can hope to achieve much success in steam navigation. In the figure, three screws are shown upon the same shaft; and the screw shaft is driven by another shaft, rising in an oblique direction through the top of the arch—one end of this oblique shaft being connected to the screw shaft by a universal joint, while the other end is armed with bevel gearing, by which it is turned round.

ALEXANDER F. CAMPBELL, 1849.

On the 20th June, 1849, a patent was taken out by Alexander Francis Campbell, of Great Plumstead, Norfolk, for improvements in a variety of apparatus; among which is an improved method of propelling vessels. This improvement consists in the use of a propeller of the form represented in *figs.* 137, 138. The propelling blades form in their outline two right-angled triangles attached at the base to the propeller shaft; but they stand so nearly in a line with the shaft, and have consequently so great a pitch, that they do not appear likely to be of much utility in urging forward the vessel. The propelling surfaces are not to be flat surfaces, but are to be formed of a certain curvilinear shape, the nature of which is not very clearly described; but any line drawn from the point *a*, to any part of the edge *b c*, and touching the propelling surface, will be a straight line.

Figs. 137, and 138.

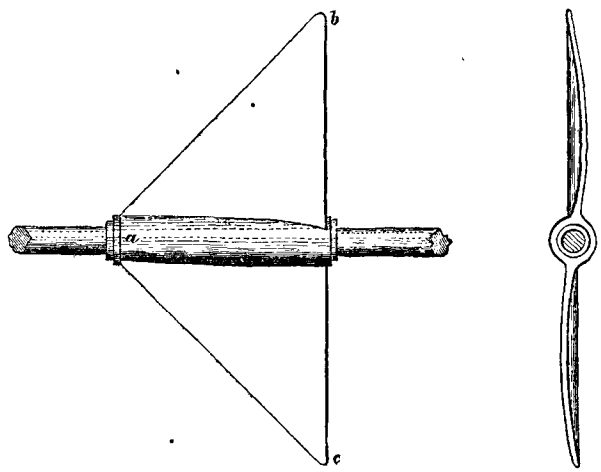

CAMPBELL'S PROPELLER.

HENRY BESSEMER, 1849.

On the 23rd June, 1849, a patent was taken out by Henry Bessemer, of London, engineer, for improvements in the machinery for raising and forcing water and other fluids, some of which improvements are available for propelling vessels. The form of apparatus proper for propelling vessels, is represented in *figs.* 139 to 143, and the propelling instrument, it will be remarked, is a screw; but as this screw is employed to give motion to water within a pipe, the arrangement falls rather under the category of expedients for propelling by forcing water out at the stern, than under the head of screw propellers.

Fig. 139. is a longitudinal section of the channel within which the screw is situated. *Fig.* 140. is an end view of the propeller, and *fig.* 141. a cross section. *Fig.* 142. is a cross section at A B, of the pipe or channel, of which the exterior is shown in *fig.* 143.

The propelling blades, it will be remarked, are disposed on the periphery of a short drum, which drum works within a short cylinder that is connected to the inlet and outlet pipes by appropriate flanges. The central part of the pipe before and behind this drum is provided with a core properly tapered off at each end, so as to promote an equable and unobstructed flow of the water; and cross partitions are introduced into the pipe as shown in *fig.* 142. with the view of preventing the water from acquiring the rotatory motion of the screw.

There is a good deal of ingenuity manifested in these arrangements, and an adequate

Figs. 139, 140, 141, 142, and 143.

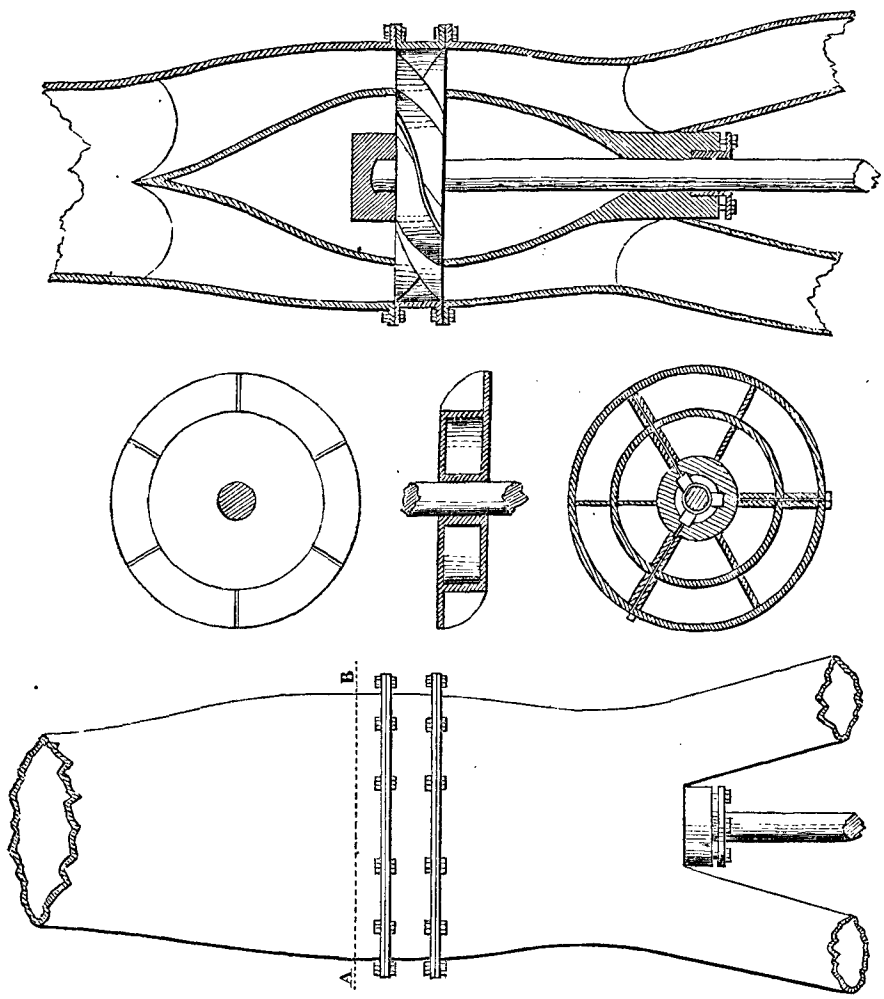

BESSEMER'S METHOD OF PROPELLING VESSELS.

mechanical knowledge in the adjustment of the details. Nevertheless, I do not consider that this mode of propelling vessels is likely to be found eligible in practice. The efficiency of a screw as a propeller is not increased by being enclosed in a pipe; and the friction of the water on the sides of a long pipe is considerable, and must occasion considerable retardation.

JOHN RUTHVEN. 1849.

On the 10th August, 1849, a patent was taken out by John Ruthven, of Edinburgh, civil engineer, for improvements in propelling vessels by forcing water out at the sides through orifices pointing towards the stern. The form of apparatus employed by Mr. Ruthven is represented in *fig.* 144. A centrifugal fan working in a case *b b*, draws water in through the bottom of the vessel, and discharges it in the direction of the arrows

through elbow pipes passing through the ship's sides. Motion is given to the fan by a vertical shaft revolving with rapidity; and the elbows from which the water issues are so formed, that the orifices of efflux may be pointed either ahead or astern. The vessel may be thus propelled forward or backward without the necessity of reversing the engine.

Fig. 144.

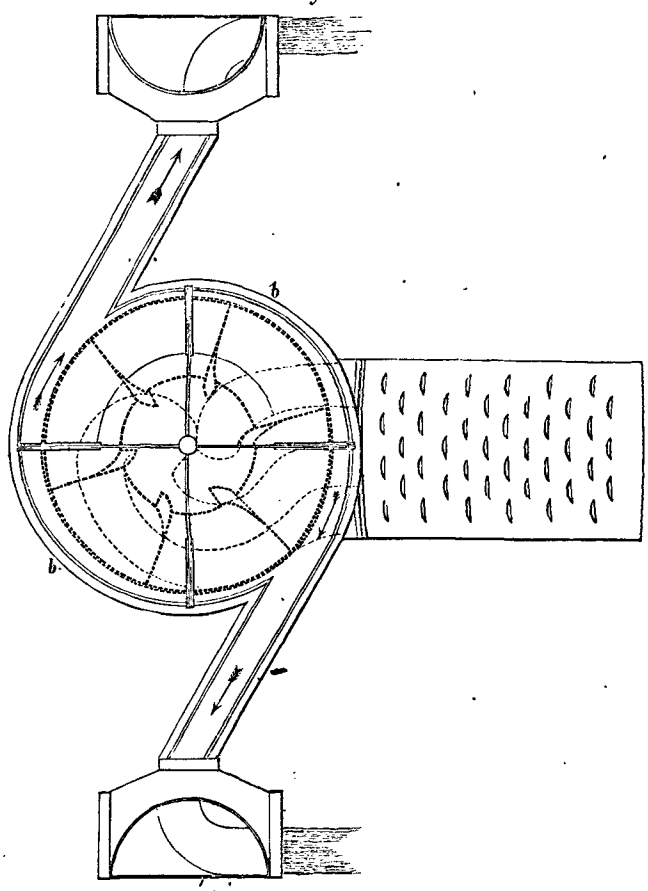

RUTHVEN'S METHOD OF PROPELLING VESSELS.

There is very little novelty in any part of this contrivance. In 1661, Toogood and Hayes obtained a patent for propelling vessels by forcing water out through the bottom, and Rumsey, Linaker, Lilley and Frazer, Hale, and many others, have subsequently obtained patents for the same expedient. In several of the arrangements a revolving fan was used for giving motion to the water, and in some of them the discharging orifices were susceptible of motion, so that the vessel might be reversed without reversing the engine, or might be steered without the aid of a rudder. In Bodmer's patent for 1844, revolving fans, armed with curved blades, are employed for giving motion to a stream of water which is to propel the vessel; and the orifices of efflux are susceptible of motion, so that they may be pointed either ahead or astern, or in any intermediate position. The object of this arrangement is to enable the vessel to be moved ahead or astern without reversing the engine, and also to aid or supersede the action of the rudder in steering the vessel should such a resource happen to be required. Mr. Ruthven has certainly prosecuted the project under review with great assiduity, and is said to have obtained satisfactory results from its application. Nevertheless, as I do not perceive that he has cleared the arrangement of the large amount of rubbing surface which the water has had to encounter in previous projects operating on this principle,—and which has effectually interdicted their success,—I do not consider that Mr. Ruthven's method of propulsion, as it now stands, is likely to be as effectual as the ordinary methods of propulsion in actual use. The existing impediments, however, I do not look upon as by any means insuperable, and the design of these remarks is not to discourage enterprize, but rather to point out the course it must follow before it can be attended with success.

ROBERT GRIFFITHS. 1849.

On the 13th September, 1849, a patent was taken out by Robert Griffiths, of Havre, in France, civil engineer, for improvements in steam engines, and in propelling vessels. In the specification of this patent, Mr. Griffiths, after describing various modes of communicating the motion of the engine to the screw-shaft, proceeds to explain the construction and action of an apparatus for determining the proper form of the screw-blades. The principle of this apparatus consists in the determination of the strength of the current at various points within the screw's disc, when the vessel is in motion, by suspending at different points within the screw's disc small balls, the pull upon each of which is indicated upon a spiral spring fixed on the deck; and according to the difference in the strength of the current in the different parts of the disc, as thus exhibited, the form of the screw is proposed to be modified. This method of determining the proper form of the screw appears to me difficult and uncertain. A better way would be to form a small screw of gutta-percha, and to set it in operation in hot water which gradually should become cold. The screw being softened, would be moulded into the shape most proper for propulsion, and which form, when cold, it would retain. Provision would of course be made for employing a metallic cutting or leading edge for such a screw. The same object might be accomplished in cold water, by covering a common screw with Indian rubber, and introducing between the Indian rubber and the metal some such substance as plaster of Paris, which is at first soft, but gradually solidifies under water. This substance would be moulded by the water, when the screw was put into revolution, into that shape most proper for propulsion; and as the plastic substance would solidify, the form would be retained. All screws, however, are, I consider, virtually moulded into an eligible shape when they are in operation. For all bodies passing rapidly through water, carry a film of water of considerable thickness with them; and since the screw must by its rapid rotation become as it were clothed with water, upon which the reacting water impinges, it will follow that where the force of impact is greatest, the film of water will be indented, and the surface of the film will acquire a more eligible configuration than the screw itself possesses. If this view be just, it will follow that a screw with a uniform pitch will be little, if at all, inferior in its operation to a screw with an expanding pitch. For although an increasing pitch is the correct principle on which to form a screw, yet since every screw carries with it a film of water which will be moulded by the water upon which the propelling surface impinges, it will follow that on the leading portion of the screw the film of water will be thinner than upon the following portion of the screw in consequence of the greater force of impact there obtaining; and although the metallic core has a uniform pitch, the aqueous covering will have an expanding pitch, as would be seen to be the case if the enveloping film were frozen, and the screw removed from the water. In a screw with an expanding pitch there will be no redressing action of

this kind, and the adhering film will be spread in a uniform thickness over the surface of the screw.

The main improvements in the mode of propelling vessels proposed by Mr. Griffiths, consists in the use of a form of propeller represented in *figs.* 145, 146, and 147.; *fig.* 145. being a longitudinal section, and *fig.* 146. a transverse section of it. *a* is the propeller shaft upon which is fixed a boss, *b*, provided with sockets for receiving the ends of the propeller arms. *c c* are the propelling blades, and *d d* are short levers by which the arms of the propelling blades may be turned round somewhat in their sockets, so as to alter the angle which the blades make with the shaft. *e* is a half globe connected with the boss *h*, which slides on the shaft and acts upon the levers *d d*. The whole of these parts are enclosed within a boss *g*, which may be spherical, or of other appropriate form.

Figs. 145, 146, and 147.

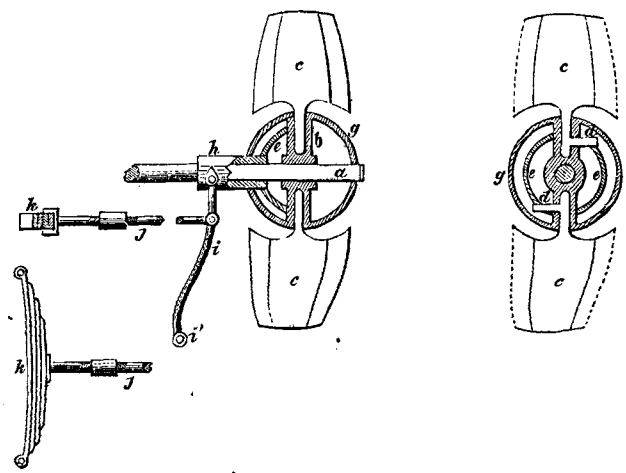

GRIFFITHS' SELF-ADJUSTING PROPELLER.

i is a lever of which the fulcrum *i'* is fixed to the vessel. A rod *j*, connects the lever *i* with the spring *k*, of which a side view is given in *fig.* 147. It will be obvious, on inspecting the figures, that by moving the sliding boss *h* endways on the shaft, the propelling blades *c c* will be turned round so as to make a greater or less angle with the shaft; and the intention of the arrangement is, that when from any cause the screw moves with a greater velocity than usual, the increased resistance of the leading edge of the blades shall, by turning them round against the spring, correspondingly increase the pitch, whereby the resistance to the propeller will be increased, and the engine will be brought back to its accustomed speed. *Figs.* 148. and 149. are other forms of propeller which the patentee proposes to employ.

Figs. 148, 149.

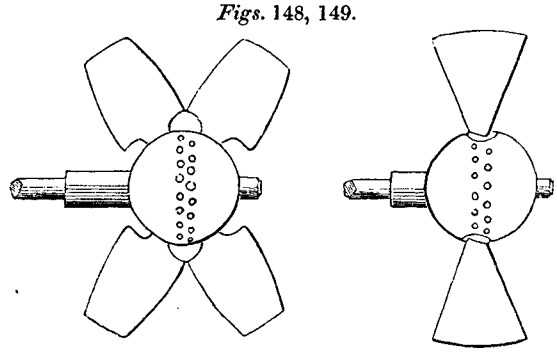

GRIFFITHS' SELF-ADJUSTING PROPELLER.

With much ingenuity in these arrangements, there is much, also, that appears to me precarious and transcendental. Nor do I consider that there is any advantage in expedients for changing the pitch of the screw, whether self-acting or otherwise: for when a vessel is brought up in her speed by a head wind, or other similar impediment, the screw will go with the same speed, or nearly so, whatever increase of pitch may be given to it; and what is wanted is not a change of pitch, but such an increase of diameter or immersion as will enable

a greater force of steam to be applied to it. In screw vessels, as in paddle vessels, it is important to be able, under favourable circumstances of wind and water, to work the engines very expansively; and under adverse circumstances, with full pressure of steam throughout the stroke; and a screw is wanted of such a quality as to be able to resist this increased pressure without a wasteful amount of slip.

BUCKWELL AND APSEY. 1849.

On the 2nd November, 1849, a patent was taken out by William Buckwell, of Battersea, civil engineer, and Joseph Apsey, of London, engineer, for improvement in steam engines, and in propelling vessels. The specification of this patent is not illustrated by drawings, but so far as I can understand the plan it is as follows: — To the end of the propeller shaft a cone, or hyperbolic, or parabolic solid is affixed, with its largest end towards the vessel; and upon the surface of the solid triangular plates or "flyers" are to be disposed spirally so as to be efficient in propelling. The edges of the propelling blades are to range in the same plane as the central line of the cone; or at the apex of the cone the edges of the propelling blades may extend somewhere beyond this plane. In such case the patentees prefer that the diameter of the propeller in the plane of the apex of the cone shall be twice the diameter of the propeller at the base of the cone. The length of the propeller is to be equal to its greatest diameter, and two propelling blades are proposed to be employed. The intention of this propeller is to imitate the action of a fish's tail.

FLORID HEINDRYCKX. 1850.

On the 15th April, 1850, a patent was taken out by Florid Heindryckx, of Brussels, engineer, for improvements in propelling. The form of propeller proposed to be employed is represented in *figs.* 150, 151, and 152. Upon each side of the propeller shaft a flat blade

Figs. 150, 151, and 152.

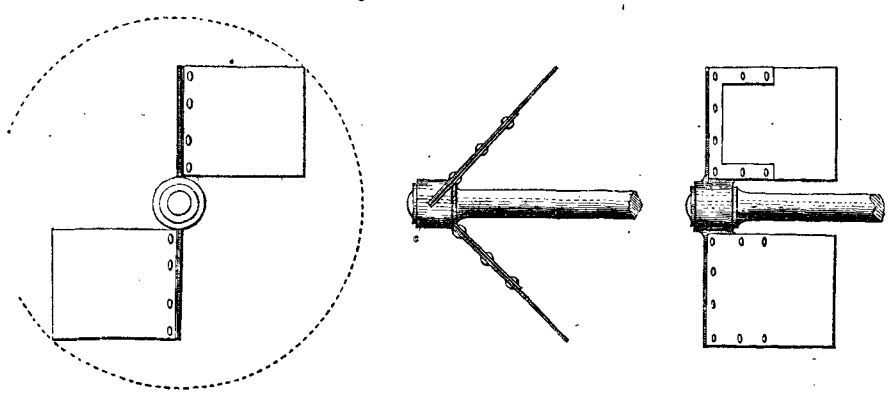

HEINDRYCKX'S FLEXIBLE PROPELLER.

is to be placed, and is to be fixed to the shaft at one corner, as shown in *fig.* 152. These blades are to be of steel, or other flexible material; and when put into revolution they will assume the position shown in *fig.* 151, and will act in propelling the vessel. This may, therefore, be regarded as another form of Macintosh's flexible propeller; and the form is less eligible than that proposed by Macintosh, and the defects quite as conspicuous. A vessel with a propeller of this kind could not back at all; for the vessel could be propelled forward in whatever direction the engine was turned round.

JOHN TUCKER, 1850.

On the 1st June, 1850, a patent was taken out by John Tucker, of Woolwich, shipwright, for various improvements, of which one is an improved method of propelling vessels. The propeller proposed to be employed is a screw; and the principal novelty professed, is the mode of its application, and the expedient adopted for raising it out of the water. The nature of these arrangements is shown in figures 153, 154, and 155. The screw, instead of

Figs. 153, 154, and 155.

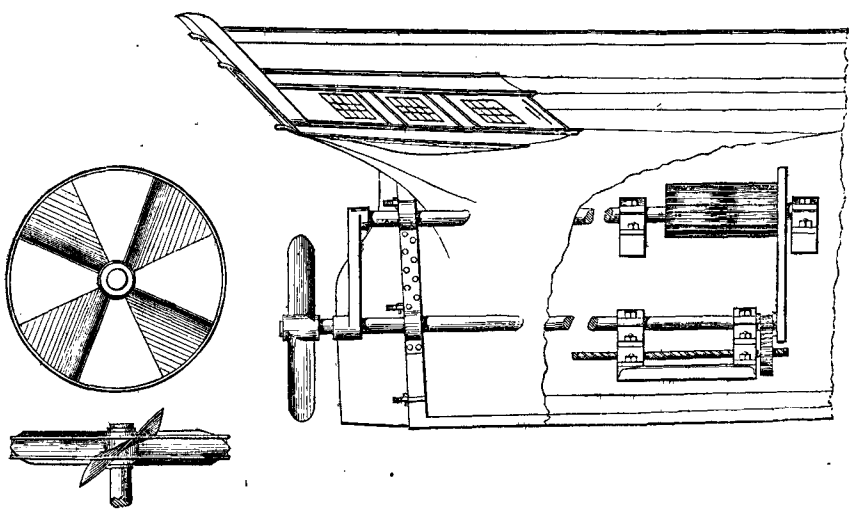

TUCKER'S MODE OF ATTACHING THE SCREW PROPELLER.

being situated in the dead wood, is placed behind the rudder; and the shaft emerges from the ship, not at the stern post, but at a sufficient distance to one side of it, to allow the rudder to act; and a notch is cut in the rudder for the reception of the shaft when the rudder is put hard up. As the stern post is not pierced by the shaft, it is not weakened by it; but a bracket is bolted upon the side of the stern post to support the shaft in its right position. For the purpose of raising the screw out of the water, a shaft is introduced above the screw shaft; and from this upper shaft an arm depends, the lower end of which embraces the screw. The superior shaft being pushed somewhat on end by mechanism

introduced for that purpose, carries with it the hanging arm, and disengages the screw from the square end of the screw shaft. The superior shaft is then put into slow revolution, carrying the arm with it, and thereby lifting the screw out of the water. The arms of the screw are proposed to be encircled by hoops to prevent them from being fouled by ropes or chains.

There is nothing original in this patent. Seaward and Maudslay both proposed to carry the screw shaft through the vessel at the one side of the stern post in 1846, and the screw was also to operate behind the rudder in their arrangements. The mode of lifting the screw out of the water is almost identical with that employed by Ericsson many years ago in the Massachusetts; and the plan of encircling the propeller by hoops had been previously propounded by Delisle Church, Ericsson, Biram, Rosenborg and others,—in some cases with the view of preventing the entanglement of ropes and ice.

GEORGE HENRY PHIPPS. 1850.

On the 5th April, 1850, a patent was taken out by George Henry Phipps, of Stockwell, in the county of Surrey, engineer, for improvements in propelling vessels. The design of this patent is two-fold. First, to introduce a better form of vessel, which will enable the screw to act with greater efficiency; and, second, to introduce a new arrangement of screw, which will produce a more satisfactory result than the arrangements heretofore adopted. The nature of these innovations will be understood by a reference to figures 156 and 157, of which one is a vertical section of the stern portion of a vessel, and the other a ground plan. The screw, instead of being placed in the deadwood, is hung abaft the stern post, but a portion of the stern projects over the screw, and from this projecting portion the rudder is suspended. The peculiarity in the formation of the ship consists in converging all the water lines beneath the level of the top of the screw so that they will meet in the stern post A B, and all the water lines above the level of the top of the screw, so that they will meet in the rudder post C D. On the plan, the lines meeting in A B are represented by the dotted lines *a b*, and the lines meeting in C D are represented by the dotted lines *c d*. It is supposed that from this formation of the hull; a better performance of the vessel would be obtained, than if the screw were introduced into a hole in the deadwood, and this supposition would certainly be correct if it were the fact that in vessels with the screw so placed the lines of the vessel terminated in the rudder post, and, therefore, left a square tuck in advance of the screw. But in all ordinary screw vessels, the water lines terminate, not at the rudder post, but at the stern post, and the part of the vessel extending beyond the stern post is merely a framing for carrying the rudder, and for supporting the outer end of the screw shaft. This mode of construction is very plainly set forth in Cummerow's patent of 1829. The rudder post is there termed a false stern post; but the water lines beneath the level of the top of the stern post terminate in the post in advance of the screw, which is in true stern post, and which substantially constitutes the after-end of the ship.

Figs. 156, and 157.

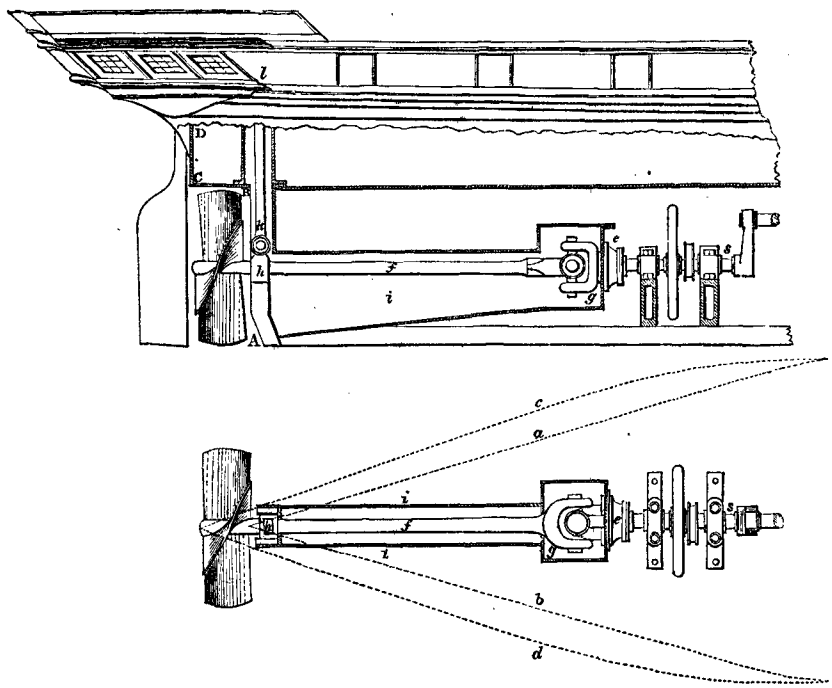

PHIPPS' ARRANGEMENT OF SCREW PROPELLER.

The new arrangement of screw which the patentee proposes, consists in such a configuration and combination of the driving parts, that the screw may be raised and sunk in the water, and worked at any point of elevation that may be desired; *s* is the engine shaft passing through the stuffing-box *e*, into the trunk *i*, which is full of water, and communicates freely with the sea. *f* is the screw shaft, connected at one end to the engine shaft by means of a universal joint, and passing near the other end through a sliding block *h*, which block is suspended by two screwed rods *k*, provided with appropriate nuts at *l*, by turning which the block may be raised or lowered, carrying with it the screw propeller. By this arrangement, the propeller may be raised or lowered to any point of elevation, even when the vessel is under weigh.

The idea of raising or lowering the propeller, by employing the intervention of a universal joint, was propounded by Shorter in 1800, by Trevithick in 1815, and by Millington in 1816; but their modes of accomplishing the object are very much less perfect than that proposed by Mr. Phipps. In screw vessels employed upon coasting voyages, and in which the draft of water is restricted by the necessity of entering shallow waters, I consider the power of raising and lowering the screw to be indispensable to their efficiency, and the arrangements proposed by Mr. Phipps for this purpose are the best that have fallen under my observation.

GASPARD MALO. 1850

On the 20th of June, 1850, a patent was taken out by Gaspard Malo, of Dunkirk, in France, shipowner, for improvements in propelling vessels. These improvements are three-fold. First, the use of a screw composed of a number of narrow blades, which may be shut up like a fan when the vessel is under sail. Second, an improved form of bearing for the neck of the screw shaft; and third, a method of strengthening the hole in the deadwood, by the application of a metal framing secured by stays. The details of these modifications are represented in *figs.* 158, 159, and 160. *Fig.* 159. is

Figs. 158, 159, and 160.

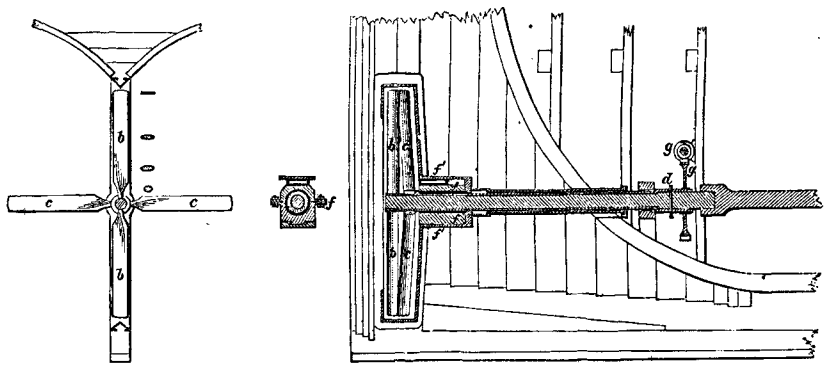

MALO'S EXPANDING SCREW PROPELLER.

a section of the neck of the shaft and its encircling bearing, made through *f f*, *fig.* 160. The blades *b b*, *c c* are arranged in pairs at right angles with each other, and each pair is fitted to a separate axis, the one passing through the centre of the other. When it is required to bring the screw into action, the external or tubular axis is turned round by means of the endless screw and wheel *g g*, — the central axis the while remaining stationary; and the blades are thus drawn out in the manner of the blades of a fan. *f f* is the stuffing box. The blades do not appear to be portions of a true screw, being described to be like the blade of an oar.

There is nothing that is of value in this patent, and but little that is original. A considerable time before its date, and before any eligible method had been matured of lifting the screw out of the water, Messrs. Seaward made models of a screw which should shut up in the manner here proposed; but the plan was never reduced to practice, having obvious objections.

WILLIAM EDWARD NEWTON. 1850.

On the 22nd August, 1850, a patent was taken out by William Edward Newton, of London, for improvements in the construction of screw ships and vessels, being a communication from a foreigner abroad. These improvements consist merely in forming the stern part of the vessel very deep like a yacht, so that a larger diameter of screw

may be applicable, and so that the screw may work in deeper water, and be less liable to be laid bare when the vessel pitches in a heavy sea. *Fig.* 161. is a section of such a vessel near the stern, and *fig.* 162. a section of the same vessel near the bow. An approach to this method of construction has always been adopted by judicious builders, so far as they could reconcile it with the other conditions they had to observe, and it is prescribed, moreover, in Buckwell's patent of 1849.

Figs. 161, and 162.

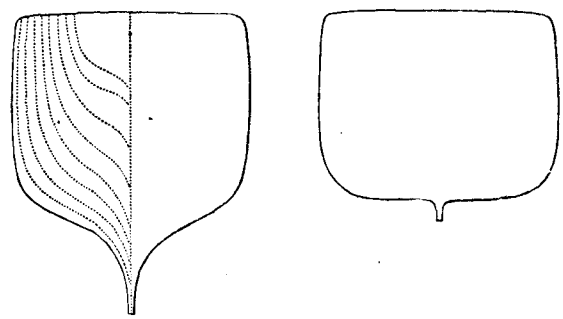

NEWTON'S CONFIGURATION OF SCREW VESSELS.

COCHRANE AND FRANCIS. 1850.

On the 5th September 1850, a patent was taken out by William Erskine Cochrane of London, and Henry Francis of Rotherhithe, for improvements in propelling and steering vessels. The method of propelling consists in the use of propelling blades or levers dipping into the water amidships, and the improvement in the mode of steering consists in the use of a balance rudder stepped into a projection of the keel, or in the use of two balance rudders not stepped into anything, but hung over each quarter. Neither expedient is novel, and rudders in the quarter have not been found to operate in a satisfactory manner.

JOHN BEATTIE. 1850.

On the 5th September 1850, a patent was taken out by John Beattie of Liverpool, engineer, for improvements in steering screw vessels. The rudder, instead of being formed in the usual way, is placed in an iron frame fixed to the stern post and keel, and the propeller is situated abaft the rudder and frame. The rudder is formed in two portions *a a*, *fig.* 163., which are joined together by an eye, (*fig.* 164.) which enables them to act together as if they were one piece. The screw shaft passes through a bearing *b*, in the frame encircling the rudder, by which means the strain is taken off the stuffing box, *s*. The patentee claims the exclusive right to form rudders so that the shaft may pass through them in the manner represented. But such a claim it is clear cannot be maintained. Ericsson in 1836, Carpenter in 1840, Sunderland in 1843, and others since that time, have formed the rudder in this manner. Montgomery, in 1846, placed the rudder in a frame, and in his plan the screw shaft passed through an oval eye in the rudder which was of the balanced kind.

Figs. 163, and 164.

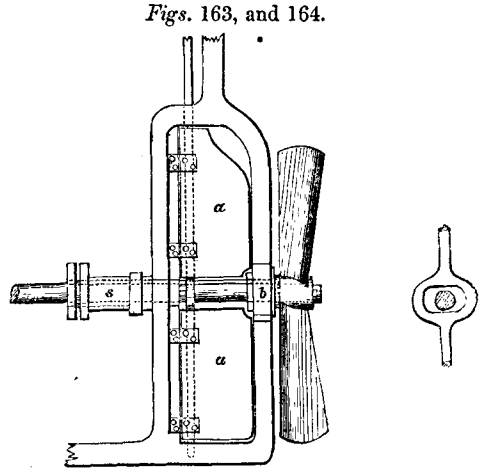

BEATTIE'S ARRANGEMENT OF SCREW PROPELLERS.

ETHAN BALDWIN. 1850.

On the 19th of June, 1850, a patent was enrolled by Ethan Baldwin, for a new mode of constructing screw propellers. The forms of propeller proposed are represented in *figs.* 165, and 166., and the mode of construction is as follows: — a disc of metal similar to a circular saw before the teeth are cut, is divided radially from the centre to the circumference; it is then passed over a central shaft. The two edges *A* and *B* are forcibly drawn from each other, and are fixed to the shaft in that position. The patentee states the distance the two edges should be drawn asunder must not be less than half the diameter of the disc, or more than two thirds of the diameter; and the latter proportion is the one shown in the figures. A screw is thus produced of a form approaching the true helix, and possessing the advantage of being easily made out of malleable iron; whereas a screw made in the ordinary way, if of malleable iron, is necessarily very expensive.

Figs. 165, and 166.

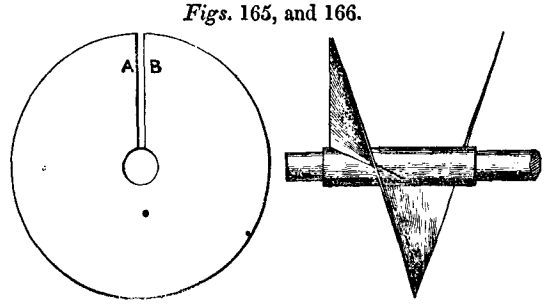

ETHAN BALDWIN'S MODE OF CONSTRUCTING SCREW PROPELLERS.

HENRY WIMSHURST. 1850.

On the 12th November, 1850, a patent was granted to Henry Wimshurst, of London, shipbuilder, for an improved method of applying the screw to the propulsion and manœuvring of vessels. The first of these improvements has reference to a method of enabling the propeller to be raised or lowered in the water. The propeller shaft is carried through the ship at one side of the stern post, and is fitted with a universal joint at *a*, *fig.* 168., to permit the propeller to be raised or lowered without interfering with the shaft of the engine. The end of the shaft is guided in a vertical direction by a slide plate of a T shape, and the bearing *b*, by which the end of the shaft is supported, is raised or lowered by screws, put in connexion with a winch handle upon deck.

Figs. 167, and 168.

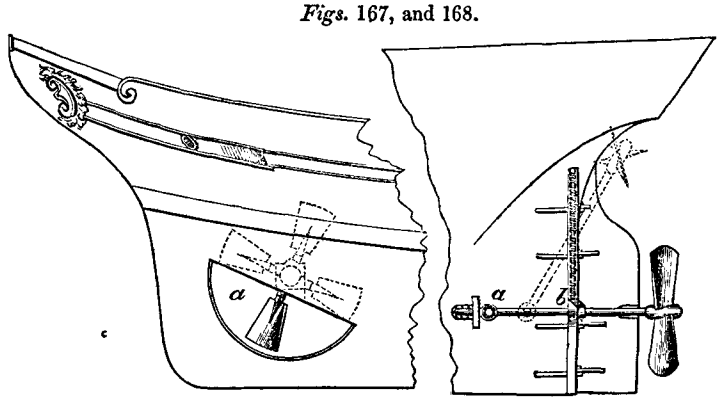

WIMSHURSTS' METHOD OF PROPELLING AND MANŒUVRING VESSELS.

The method of manœuvring vessels is shown in *fig.* 167. A screw is applied in the bow

of the vessel with its axis at right angles with the vessel's course, and by turning this screw in either direction, the bow is deflected accordingly. The arms of this screw are so made as to be capable of turning upon their axes so as to present their edges more or less to the water, and appropriate mechanism is introduced to regulate their movements in the manner required.

BENNETT WOODCROFT. 1851.

On the 30th January, 1851, a patent was granted to Bennett Woodcroft, of London, for a method of varying the angle of screw propeller blades. The propeller blades are constructed with cylindrical necks, which necks fit into round holes in the boss of the propeller; and by turning these necks round more or less, the angle of the blades is varied correspondingly. The details of the arrangement prescribed by this patent will be apprehended by a reference to *figs.* 169, and 170.

Figs. 169, and 170.

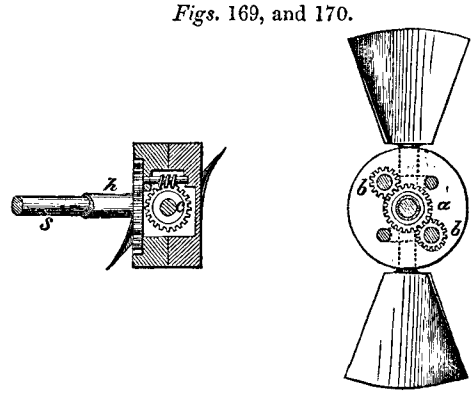

WOODCROFT'S METHOD OF VARYING THE ANGLE OF SCREW PROPELLER BLADES.

To the neck of each propeller blade is fixed a screw wheel *c*, which, when acted upon by a worm, is made to revolve, carrying the blade with it. The worm wheel is moved by means of a small spur wheel *b*, fixed to the same shaft, and which is driven by a larger spur wheel *a*, keyed to the hollow shaft, *h*, through which the main driving shaft, *s*, passes to the boss of the propeller. The shaft *h*, may be moved by any of the well-known means for that purpose. In some of the arrangements represented, the wheel work is dispensed with, and two short crank arms are fixed to the propeller shank inside the boss, to the ends of which rods are secured, passing through the fore end of the boss to a clutch box on the shaft; and by moving this clutch, the angle of the blades is altered. In order to retain the blades in the position desired, a second clutch is placed upon the shaft near to the boss; from this clutch wedges pass into the boss; so that upon end motion being given to this clutch, the wedges are forced between the necks of the blades and the propeller boss, and the blades are thus jammed at the angle desired.

Another arrangement specified, is similar to that first described. Instead of the screw wheel *c*, a spur wheel is introduced, which is acted upon by a rack moving longitudinally within the boss. This rack is connected by a rod to a clutch box, resembling that already described. The same system of wedging is also employed in this case.

An arrangement of apparatus is also described, by means of which the vessel may be manœuvred in the water. The propeller vanes are so arranged, that they are made to pass edgeways through the water during one portion of their revolution, and sideways through the water during the remaining portion of their revolution. This feathering of the blades

is effected by means of the crank arms attached to the necks of the blades already described; and the rods passing from these arms are carried to a stationary cam block, by which the necessary motion for feathering is imparted in the revolution of the propeller shaft.

CAPTAIN GEORGE BEADON. 1851.

In the month of April, 1851, a new form of screw was registered by Commander George Beadon, of the royal navy. This screw is represented in *fig.* 171., and it is substantially a half turn of a double-threaded screw, like that used in the Archimedes, with certain portions of it cut away. This appears to me to be a judicious form of screw as regards efficiency, inasmuch as the cutting edge, by not coming into such direct and rapid contact with the water, will not experience so much resistance. But the form does not appear to be so strong as the common form of screw; and it also occupies more length in the deadwood.

Fig. 171.

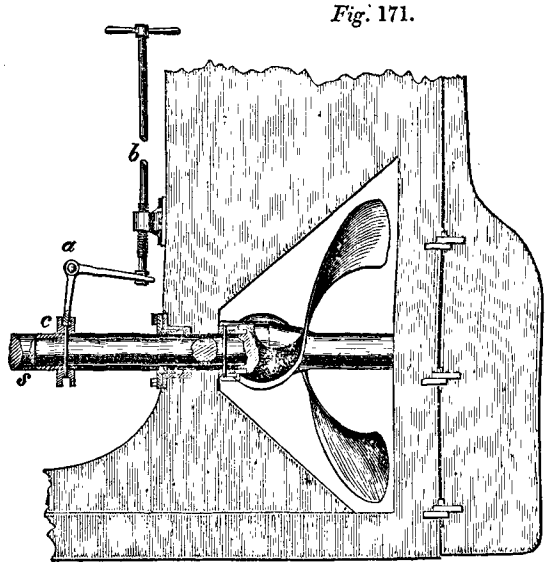

BEADON'S SCREW PROPELLER.

HENRY LUND. 1851.

On the 30th April, 1851, a patent was taken out by Henry Lund, of London, for improvements in propelling by the use of what are termed rowing propellers. The propellers act somewhat in the manner of ordinary oars, but, like the screw, they are totally immersed in the water; they consist of two long flat blades, the one in a line before the other, and coupled together by a boss, to which a partial rotatory motion is communicated from the engine shaft. This motion gives a reciprocating action to the blades, the one passing towards the stern, while the other is making the return stroke. By means of gearing within the boss a feathering action is given to the blades, the edges of the blades being presented to the water during their back stroke. These propellers are placed either amidships, (in which case they are under the bottom of the vessel in a horizontal line) or they are placed in duplicate on each side of the dead wood, where they are inclined more or less, following the lines of the transverse section of the vessel.

ALFRED B. STURDEE. 1851.

In 1851, a pamphlet was published by Alfred B. Sturdee of Woolwich, Naval Architect, descriptive of a species of steam vessel which he had proposed in 1848, as being peculiarly

applicable to the screw propeller. This form of steamer he calls a "Twin-stern Steamer." The bow is like the bow of a common steamer, but the body, at about the middle of its length, splits into two bodies, each of which is provided with a rudder, and in the central tunnel thus formed the screw is placed. This form of vessel was patented in America by John L. Smith of Charleston, South Carolina, in the year 1835.

CAPTAIN CARPENTER. 1851.

On the 13th May, 1851, a patent was enrolled by Captain Edward John Carpenter, of the Royal Navy, for improvements in screw propelling. The first of these improvements has reference to the form of the vessel. The body of the vessel, at about the middle of its length, is to split into two bodies, which are to terminate in two rudders, as in the plan last described; but instead of putting the screw in the tunnel, Captain Carpenter puts a screw in each of the deadwoods, as represented in *figs.* 172, and 173. Captain Carpenter also describes a species of propeller, which is constructed by

Figs. 172, and 173.

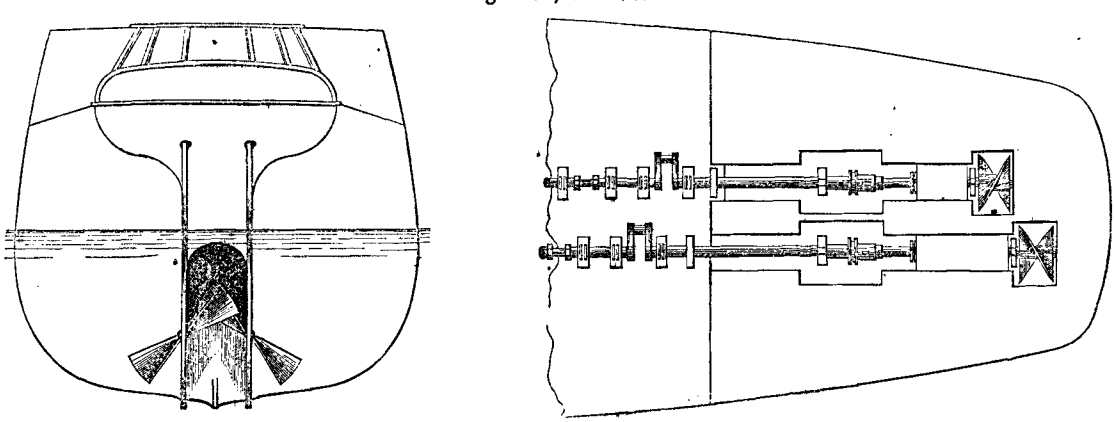

CARPENTER'S DUPLEX RUDDER AND SCREW PROPELLER.

attaching a flat blade to the shaft, at an angle of $22\frac{1}{2}$ degrees, and then twisting it until its outer edge assumes an angle of $67\frac{1}{2}$ degrees with the shaft. The object of this construction is the same as that of Baldwin's — economy. A method is also described of unshipping the propeller blades. The ordinary catch is converted into a grip-block, which lifts each blade separately out of its socket when the keys attaching it thereto have been withdrawn, and the keys are made to pass through the boss inboard.

MISCELLANEOUS INVENTORS.

NOTWITHSTANDING the large array of projects for screw propulsion exhibited in the foregoing pages, I have by no means exhausted the catalogue. But having explained at some length those projects which appeared to be of most interest, I must content myself with a more brief account of the rest.

Bouguer, 1746.—In Bouguer's "Traité du Navire," published at Paris in 1746, various methods are described of propelling vessels without the aid of sails. One arrangement suggested, is to place two paddles at the stern, which are to be moved backwards and forwards by the crew; and the paddle blades are to open like a double door during the back stroke so as to imitate the action of the duck's foot. Another arrangement which is mentioned as having been proposed, is, to employ revolving arms, like the vanes of a windmill; but this expedient it is stated, had not been found to possess sufficient force.

Fitch, Desblanc, Thilorier, and Delacroix, 1791 to 1799.—On the 29th of November, 1791, a brevet of invention was granted in France to Fitch, the American, for a vessel to be propelled by steam; but it is stated in the "Descriptions des Machines et Procédés spécifiés dans les Brevets d'Invention expirés," Paris, 1811, that M. Desblanc had previously proposed a similar scheme; and that a model of his plan had been deposited in the Conservatoire des Arts et Métiers. On the 14th February, 1796, a brevet of invention was taken out in France by Jean-Charles Thilorier, of Paris, for modes of employing currents of air and water in the production of mechanical power, and for numerous applications of that principle, one of which was to enable vessels to ascend a river against the current—a scheme long before projected by the Marquis of Worcester. On the 27th July, 1799, a brevet of invention was taken out in France by M. Delacroix, for a vessel capable of plying without sails, horses, or wheels.

O'Reilly, 1805.—In the "Annales des Arts et Manufactures d'O'Reilly" for 1805, vol. xx., a memoir is given on the means of superseding the action of the wind, which is a reproduction of the scheme of Bernouilli, published fifty years before. Eight wheels, strung on a shaft at equal distances, are to be placed on each side of the vessel, and the arms of the wheels are to have oblique blades attached to them, by the revolution of which, the vessel will be propelled. Delisle's idea of a propeller is confessedly taken from O'Reilly's; but Delisle introduced helical blades.

Boswell and others, 1815 to 1819.—Propellers on the principle of an Archimedean screw were patented in America, in 1815. About 1816, a submerged propeller was proposed by Mr. Boswell, and is described in the "Repertory of Arts" of that date. Screw propellers are also described in the "Annals of Philosophy" for 1818, and in the "Edinburgh Philosophical Journal" for 1819.

Norton, X. Y. and J. Y. 1823.—In the first volume of the "Mechanic's Magazine," published in 1823, an account is given of a spiral watermill, invented some years previously by John

Norton. The spiral, it is stated, is only partially immersed, and the water passes it as a nut passes its screw. In the 2nd volume of the "Mechanic's Magazine," a correspondent who signs himself X. Y., asserts that twenty years before this time, and therefore about 1804, he had made a spiral water-wheel like Norton's, but did not find it so effectual as the common tide or undershot wheels. In the second volume of the "Mechanic's Magazine," p. 33., there is a communication from a correspondent, J. Y., recommending an upright spiral, working in a tube like Emerson's, as the best and cheapest species of water motor for mills. He recommends also, that wheels on this principle should be set on the sides of a vessel in lieu of paddle wheels.

Dollman, 1824.—On the 20th November, 1824, a brevet of invention was taken out in France by M. Dollman, for an arrangement of "revolving oars suitable for navigation," described in the "Recueil des Brevets expirés," vol. xl., p. 126. Two concentric axes turning in opposite directions, and each bearing two blades, inclined at an angle of 45 degrees with the keel, are placed at the stern of the vessel, and by the revolution of these blades in opposite directions, the vessel is propelled. This plan seems to be almost identical with that of Perkins, patented in the same year and enrolled in February 1825, except that in Perkins' arrangement the blades were twisted, whereas in Dollman's the blades appear to be flat.

Maceroni, 1827.—In the year 1827, Colonel Maceroni submitted a plan of a screw propeller to the Duke of Clarence, afterwards William the Fourth, and, at his desire, the project was examined by Admiral Sir Edward Owen, but was rejected, mainly on account of the great velocity at which it was maintained the screw must revolve. Some of the correspondence which took place in connection with Colonel Maceroni's application, is given in the 31st volume of the "Mechanic's Magazine," p. 226.

Benjamin M. Smith, 1829.—On the 20th November, 1829, a patent was granted to Benjamin M. Smith, of Rochester, New York, in America, for a new way of propelling vessels by the application of sculling wheels, or screw propelling wheels, at the stern. The wheels are made with six blades, like the vanes of a smoke jack, and one is placed on each side of the stern—the two revolving in opposite directions. This arrangement of propelling wheels has since been introduced by Ericsson, for propelling barges on the canals and rivers of America, and is found to act in a satisfactory manner.

Captain Basil Hall.—Hooke, in 1684, showed, that the galleys of the ancients were propelled by an action of the oars more resembling sculling than rowing, and he also pointed out the eligibility of that mode of propulsion. Captain Basil Hall, in the account of his voyage to Loo Choo, states that the Coreans scull their ships instead of rowing them; and he adds that he considers the action preferable to that of oars.

Josiah Copley, 1830.—On the 22d May, 1830, a patent was granted to Josiah Copley, of Pennsylvania, in America, for a submerged propeller for ships, and which he denominates a "spiral propeller." To a shaft to which a rapid rotatory motion is imparted, a number of vanes are affixed; and these vanes, by their reaction upon the water, are to propel the vessel. Eight, or any other number of vanes, may be employed, and they are to form

"segments of spirals." The instrument is also proposed to be employed for driving machinery by placing it in a current. The patentee says that proposals for propelling vessels by an instrument of this kind have been made at different times, but that in every case the attempt to introduce such propellers has been unsuccessful. The cause of the previous miscarriages, however, he says he has discovered, and believes that, by the use of his propeller, the desired success will be attained. Experience has shown these views to be just; for many of the screw propellers now in operation are nearly identical with that which Copley prescribed. But it does not appear that he contributed in any material degree to bring the screw propeller into practical use, and, therefore, though a *judicious*, he was not a *beneficial* inventor.

Henry Ovinel, 1830.—On the 1st October, 1830, a patent was granted to Henry Ovinel, of New York, in America, for a mode of propelling vessels. He proposed to place spiral wheels in tubes stretching along each side of the boat, from near the bow to the stern, or one tube might be placed under the vessel's bottom. This is a retrogression, being a less eligible arrangement than several of the plans patented before.

Felix Peltier's Expanding Pitch, 1830.—On the 1st October, 1830, a patent was granted to Felix Peltier, of New York, for an instrument for propelling vessels through the water. This instrument is a screw, which is to work in the water in the manner in which a screw works in a nut, and the patentee claims as his invention this species of propeller, "whether it be formed of a single spiral wound round a solid arbor, and cutting it constantly at equal angles, or whether its inclination vary, and whether the spiral be of one and the same breadth throughout, or vary in its several dimensions, measured from the arbor." In other words, the patentee claims the use of the screw, whether formed with a uniform pitch like Smith's, or with a varying or increasing pitch like Woodcroft's, or with an enlarging diameter like Rennie's, which is described by winding a straight line on a cone.

Clark Wilson's Expanding Pitch, 1830.—On the 1st of October, 1830, a patent was granted to Clark Wilson, of New Hampshire, in America, for an improved water-wheel, or propeller, for giving motion to mills. This wheel is to have leaves like the leaves of a smoke jack, but the leaves on the upper portion of their faces are to have a less inclination with the axis than on the lower portion of their faces, or, in other words, they are to be made with an expanding or increasing pitch from their lower edges upwards, and the curve is to be such that, where the water leaves the wheel the faces of the leaves are nearly horizontal. This is the principle of the increasing pitch subsequently patented by Woodcroft and others.

Captain J. Pole, 1832.—In the "Mechanic's Magazine," vol. xviii., p. 141. (December 1. 1832), a communication appears from Captain J. Pole, illustrative of the practicability and advantage of propelling vessels by means of submerged wheels, armed with vanes resembling the vanes of a windmill; and Captain Pole states that, two years before, he had sent to the Philosophical Society of Mauritius a model of a steam boat propelled on this principle, which is simply the principle of sculling. He proposes to place one propeller at the bow,

and another at the stern, and he enumerates the following advantages as incident to the system:—The propelling apparatus remains efficient whether the vessel is much or little immersed; a rolling action of the vessel will not disturb the action of the propellers, and a pitching action will at least leave one of them in the water; and, finally, in a war steamer the propelling machinery will be out of the reach of shot.

Sauvage, 1832.—In the "Recueil des Brevets expirés," vol. lxiv. p. 242, plate 19., there is an account and representation of a plan of propelling vessels by one or more Archimedean screws, for which a brévet of invention was granted to M. Sauvage in 1832. Sauvage proposed to place a spiral blade on each side of the vessel; or for pleasure or river vessels, he proposed to place a single spiral blade at the stern.

Screw Water-mill upon the Mississippi, 1833.—In the "Mechanic's Magazine," vol. xxx. p. 450., a description is given of a screw water-mill upon the Mississippi, which, at the time of the writer's visit to that locality in 1833, had then been recently erected. In this mill the prime mover is a screw like a cork-screw, made of oak, which floats in the water of the river, and is turned round by the current. The screw in its revolution turns round a chain of jointed rods, which communicates with the millwork in the manner of a flexible shaft. The writer says that the same sort of machine is used for towing or warping vessels out of the Mauritius harbour against the trade winds, sometimes driven by the force of the current, and at other times worked by men with a windlass or handle in a boat. As the population on the banks of the Mississippi where this mill is situated are principally French, he thinks it probable that it is from the Mauritius that the idea has been derived.

J. B. Emerson, 1834.—On the 8th March, 1834, a patent was granted to J. B. Emerson, of New York, for improvements in the steam engine and improvements in propelling. Emerson's propeller for vessels consists of a wheel with spiral blades, which is submerged beneath the water at the stern, and the propeller shaft pierces the stern post, and a false stern post is also employed. The propelling blades or plates are supported by arms and encircled by rings, as in the plans of Delisle and Ericsson.

William Burk, 1834.—On the 2nd December, 1834, a patent was granted to William Burk, of Pennsylvania, in America, for a screw for propelling vessels. This screw is to wind round the shaft two, three, or more times, and may be applied at either end, or at both ends, or both sides, or in the middle of the boat, as may be preferred.

Isaac Theal, 1834.—On the 23rd of December, 1834, a patent was granted to Isaac Theal, of New York, for an arrangement of screw propeller. An Archimedean screw, immersed in the water, is to be placed on each side of the vessel, and it is stated that one fifty feet long may be ten feet diameter.

John L. Smith, 1835.—On the 18th September, 1835, a patent was granted to John L. Smith, of South Carolina, in America, for an improvement in propelling vessels. The propeller is to be a screw or some other equivalent instrument; but the vessel is to be formed with a cavity to receive the propeller, by giving to the after end the form of a twin boat from about midships to the stern; the fore part, from about midships to the bow,

being of the ordinary shape. Various proposals for constructing screw vessels upon this plan have been made since this time.

Edward P. Fitzpatrick, 1835.—On the 23d November, 1835, a patent was granted to Edward P. Fitzpatrick of New York, for an improved form of spiral propeller for propelling ships. The shaft of this propeller is to swell in the middle so as so resemble two cones united at their bases, and the spiral thread wound round it, is also to be wider at the middle than at the ends.

Aretus A. Wilder, 1836.—On the 8th March, 1836, a patent was granted to Aretus A. Wilder, of Genesse county, New York, for an open screw wheel for propelling vessels. An account of this screw wheel is given in the "Journal of the Franklin Institute," vol. xviii. p. 321.; and from this account the following is extracted:—"The open screw wheel is to be made by floats upon a long shaft forming an interrupted spiral; and this is claimed, with its application to the propelling of steam, canal, and other boats."

Jesse Ong, 1837.—On the 23d May, 1837, a patent for a new mode of propelling boats was granted to Jesse Ong, of Pennsylvania. This propeller has two wheels, with the shaft of the one passing through the centre of the other, and is, in fact, the same as Ericsson's, which was patented in England in July, 1836, but in America, only in February, 1838. The editor of the "Franklin Journal," in his notice of Ericsson's patent in 1838, says, that Col. Stevens, of Hoboken, had, in 1805, informed him that he had tried such wheels in the stern of a boat, first using a single wheel in the centre. The tendency of the boat so tried was to move in a circle; a result imputed to the lessened resistance as the vanes rose to the surface, in consequence of the greater ease with which the water there was moved out of the way. Subsequently two wheels were tried side by side revolving in reversed directions; but the effect not being deemed equal to that which had been hoped for, the thing was abandoned.

Thomas Jackson, 1839.—On the 18th January, 1839, a patent was granted to Thomas Jackson, of Pennsylvania, for a method of propelling canal boats. He places two wheels in the centre of the stern, as in Ericsson's arrangement, but applies a dead wood to prevent the entanglement of ropes, and to fend off the screw from the sides of the canal. Shorter, however, in 1800, the Brothers Bourdon, in France, in 1824, and various other persons after that date, proposed to place the screw in the dead wood, so that such a disposition of it could be no novelty in 1839.

Mr. Waddell.—In the "Mechanic's Magazine" for 1839, vol. xxx. p. 82., a letter appears from Mr. Baddeley, in which he states, that, by a communication he had lately received from Sir J. Robison, it appeared that a propeller, similar to Joseph J. O. Taylor's, patented in 1838, and described at p. 25. of the present work, had, many years before, been tried by Mr. Waddell, of Leith. Mr. Waddell was a ship builder, who, having realized a large fortune in India, subsequently expended much of it in scientific pursuits, and he had fitted a vessel with a propeller, resembling Shorter's, with which he had made a voyage to the coast of Africa. The conclusion, however, at which he arrived, as the result of this

experiment, was, that paddle-wheels of large diameter and little dip, had greater propelling efficacy than a screw.

Benjamin D. Beecher, 1839. — On the 31st December, 1831, a patent was granted to Benjamin D. Beecher, of Connecticut, in America, for improvements in propelling, the main peculiarity of which is, that he employs two screws set in the cutwater.

Ebenezer Beard, 1841.—On the 10th April, 1841, a patent was granted to Ebenezer Beard, of Connecticut, in America, for an improvement in the screw propeller. He claims, as his invention, "curving the wings of the screw paddles in a direction perpendicular to the shaft or axis." This appears to embrace the principle of a curvilinear or parabolic screw, comprehended in the Earl of Dundonald's patent of 1843, and in Hodgson's patent of 1844.

It would extend these remarks to an inconvenient length, if I were to attempt to give an account of the numerous other projects and suggestions for the improvement of screw vessels that have appeared in this country, on the continent of Europe, and in America, during the last ten years. Most of them are reproductions merely of previous contrivances, with unimportant modifications; and any of them which have been received into practice, or appear to me susceptible of beneficial practical application, will be noticed in a more advanced part of the present work.

Here, then, I close my recapitulation of the various projects which have been propounded at different times for propelling vessels by means of a screw; and in all this wide array of inventions how few have had sufficient vitality to outlive the stimulus of novelty which attended their initial promulgation, and how few have been effectual in working out any useful result! A large proportion of the plans I have described were susceptible of beneficial practical application. Several of them, in fact, were tried. Nevertheless, up to the time at which Smith and Ericsson appeared, no permanent or practical progress had been made in screw propulsion. In 1836, when their patents were taken out, no vessel was in existence which was propelled by a screw. Experiments, indeed, had been made both in this country, in America, and in France, showing that, by means of a screw, a vessel might be propelled through the water. But the recollection of these experiments had, in a great measure, died out, and what remained of it operated rather as a discouragement than a provocative to enterprize, since it carried the presumption that, if the mode of propelling by a screw, when tried, had been found satisfactory, it would not subsequently have been relinquished. Lyttleton in 1794, Shorter in 1802, Stevens in 1804, Bourdon in 1824, Brown in 1825, and Waddell after that time, had all tried to propel vessels by means of a screw, and had attained a certain measure of success in their operations. But these inventors appear to have been deficient in that persistency of effort which is the main element of progress, and probably, too, circumstances had not ripened sufficiently, at the time they worked, to enable such a quality to produce its natural results. Whatever theory, however, we may form upon this subject, it is at least certain that up to the time at which

Smith took up the subject in this country, and Ericsson in America, no practical progress in screw propelling had been made; whereas, since that time, and mainly in consequence of their successes, the progress of the art has been rapid and uninterrupted. I take no account in such a retrospect of small questions of detail. I do not think it necessary to ask whether the particular propellers by which this revolution in the art of steam navigation was accomplished, were better or worse intrinsically than other propellers, whose existence had been limited to paper or to the sphere of polytechnic toys or ineffectual experiment. It does not appear to be a reasonable expectation, that the best possible forms of screw should be those which were first practically applied, and it was a fair presumption that better forms than any known in the infancy of the system should afterwards be discovered. But as such a discovery could not diminish the credit due to Messrs. Smith and Ericsson for having practically introduced this new method of propulsion, so neither should it diminish the emoluments properly accruing from their successful exertions. In fact, the introducers of new forms of screws cannot, in equity, be set upon the same level as those by whom screw propelling has been established practically as a new art. The service rendered by the inventor of a new form of screw ends when his invention is superseded by one still more eligible. There, too, should end the profits of his invention. But the service rendered by those who practically establish a new art continues through all its developments, and ends only when the art itself is eventually discarded. Two distinct questions, in fact, here present themselves for consideration. The one is, in what order of mechanical merit we must rank the various projects which have been passed under review; and the other is, to whom, among all the authors of these projects, we are indebted for the practical establishment of the art of screw propelling. Upon the first point it would be hopeless to expect any unanimity of opinion, and those who wish to employ any particular form of screw which is novel, and involves invention, should be prepared to pay the inventor for the privilege. But no such tribute can release them from their obligations to those who were practically the authors of the art, and who have in equity a higher and larger claim than any contrivers of alternative apparatus, since they have overcome greater difficulties and conferred greater benefits.

The introduction of a new art constitutes a salient feature of an age; and the rewards due to such an achievement should not be grudgingly measured out by the legal standard of merit, which recognises only the conditions of routine practice, but should be referred to a higher tribunal, which, taking cognizance of the difficulties surmounted, and the public benefits conferred, should decide in accordance with the spontaneous dictates of plain sense and plain honesty. In our own country, the persevering struggles of Smith have mainly contributed to the establishment of screw-propulsion, — a system which seems destined to mark a new and important epoch in our maritime and commercial history: and it would only be a fitting expression of national gratitude if this revolution were inaugurated by conferring on its author national honours, and a national reward; while such an event would harmonise with the tenor of a reign, distinguished by its appreciation and encouragement of the arts, and a lively interest in all that pertains to the common weal.

CHAPTER II.

PRACTICAL INTRODUCTION OF THE SCREW PROPELLER.

In this chapter I propose to place upon record the more important incidents connected with the practical introduction of the screw as a propeller. These incidents date from the time that the subject was taken up by F. P. Smith and Captain John Ericsson. Previous attempts to propel vessels by a screw, but which led to no useful result, have been already noticed; and I have now to give an account of those operations, from which the existing practice of screw propelling has been derived.

In 1835, F. P. Smith, then a farmer at Hendon, had his attention first directed to the subject of screw-propulsion. In the spring of 1836, he obtained the co-operation of Mr. Wright, the banker; and his patent was granted on the 31st May, 1836. A model boat, which he had constructed, and which was fitted with a wooden screw, was then exhibited in operation, upon a pond on his farm at Hendon, and at the Adelaide Gallery in London. At the latter place it was inspected by Sir John Barrow, then secretary of the Admiralty, and an offer was made by Messrs. Harris and Bell, of Alexandria, to purchase the invention for the Pasha of Egypt, but this offer was declined.

The results obtained with the model boat were deemed so satisfactory, that in the autumn of the same year, Mr. Smith and his friends constructed a boat of six tons burthen, and about six-horse power, in order further to demonstrate the advantage of the invention. This boat was fitted with a wooden screw of two turns. On the 1st of November, 1836, she was exhibited to the public in operation on the Paddington Canal, and she continued to ply there and on the Thames until the month September, 1837. During one of the trips on the Paddington Canal in February, 1837, an accident occurred which first pointed out the advantage of diminishing the length of the screw. The propeller having come in contact with some object in the water, about one half of its length was broken away, and no sooner had this been done that the boat quickened her speed, and was found to realize a better performance than before. In consequence of this discovery, a new screw was fitted of a single turn, and with the vessel thus improved, very satisfactory results were obtained.

But although these experiments established in a great measure the eligibility of the screw as a propeller in the case of canal and river vessels, nothing had yet been done that was then generally known or remembered, to show that it was applicable to vessels navigating the sea. To this point, therefore, Mr. Smith now directed his attention, and he determined to carry his small vessel to sea with the view of ascertaining if she there ex-

hibited a similar efficiency to that displayed in the case of canal and river navigation. Accordingly, on a Saturday evening, in the month of September, 1837, he proceeded in his miniature vessel from Blackwall to Gravesend, where, having at three in the morning taken in a pilot on board, he went on to Ramsgate, and reached that place the same morning during divine service. From Ramsgate he proceeded to Dover, where a trial of the vessel's performance was made in the presence of Mr. John Wright, and of Mr. Peake, civil engineer. From Dover he went on to Folkestone, and from thence to Hythe, returning again to Folkestone. The distance between Hythe and Folkestone, which is about five miles, was accomplished in about three quarters of an hour. On the 25th of the same month, he returned to London, in weather so stormy and boisterous, that it was accounted dangerous for any vessel of so small a size to put to sea. The courage of the undertaking, and the unexpected efficiency of the propeller, rendered the little vessel during this voyage an object of much interest; and her progress was watched with solicitude from the cliffs by nautical and naval men, who were loud in their praises. These favourable impressions reached the Admiralty, and produced a visible effect there. In March, 1838, the Lords of the Admiralty requested Mr. Smith to have the vessel tried under their inspection. Two trials were accordingly made, which were considered satisfactory; and thenceforth the adoption of the propeller for the naval service was deemed not an improbable contingency.

Before finally deciding, however, upon the adoption of the propeller, the Lords of the Admiralty considered it desirable that an experiment should be made with a vessel of at least 200 tons; and Mr. Smith and the gentlemen associated with him in the enterprise, accordingly resolved to construct the Archimedes. This vessel was of the burthen of 237 tons. She was designed by Mr. Pascoe, was laid down in the spring of 1838, was launched on the 18th October following, and made her first trip in 1839. She was fitted with a screw of one convolution, which was set in the deadwood, and was propelled by two engines of the collective power of 90 horses. Her cost was 10,500*l*. She was built under the persuasion that her performance would be considered satisfactory if a speed was attained of four or five knots an hour; and that in such an event, the invention would be immediately adopted for the service of the navy. Nearly twice this speed was actually obtained.

After having made various trials on the Thames and at Sheerness, the Archimedes on the 15th May, 1839, proceeded to sea. She made the trip from Gravesend to Portsmouth, under adverse circumstances of wind and water, in twenty hours. At Portsmouth she was tried against the Vulcan, one of the swiftest vessels in Her Majesty's service. The trial took place before Captain Crispin, Admiral Fleming, and other competent authorities, who acquired from the result a very high opinion of the efficiency of the screw as a propeller, and this opinion they expressed in writing to Mr. Smith. These successes were achieved by a screw of one complete convolution; and, although it has subsequently been found beneficial to reduce the length of the screw to less than a convolution, it is certain, nevertheless, that a screw of a whole turn is an efficient propeller.

Soon after this time the Archimedes had to return to London, in consequence of an

accident having occurred to the boilers, and new boilers were fitted, which occupied a period of five months. She was then sent to the Texel, at the request of the Dutch Government, whose interest her performances had excited; but on the way thither, she broke the crank shaft of one of her engines. She was consequently put into the hands of Messrs. Miller, Ravenhill, and Co., to undergo a complete repair, and at the same time the form of her screw was altered, by dividing the one whole turn into two half turns, which, being placed on the opposite sides of the axis, gave to the propeller the character of a double threaded screw of half a turn. In April, 1840, the Admiralty despatched Captain Chappell of the Royal Navy, and Mr. Lloyd, the chief engineer of Woolwich dockyard, to conduct a series of experiments upon the vessel at Dover. During April and May these experiments were carried on, and the speed of the Archimedes was tested relatively with that of the mail packets on the Dover station. The result was a highly favourable report to the Admiralty, stating that the success of this new method of propulsion had been completely proved.

Immediately after these experiments were concluded, the vessel was placed at the disposal of Captain Chappell who, accompanied by Mr. Smith, performed with her the circumnavigation of Great Britain, visiting in her progress every sea-port of importance, so as to afford shipowners, engineers, and others, an opportunity of becoming acquainted with this new mode of navigation. Everywhere the vessel became an object of wonder and admiration. Heretofore engineers had been almost unanimous in the opinion that a screw would occasion a serious loss of power from the obliquity of its action, and the consequent dispersion of the water; and it was concluded, therefore, that it would be ineligible as a propeller. In this opinion I perfectly remember I concurred. But it was impossible to resist facts such as the performance of the Archimedes afforded. Ancient opinions, in many cases negligently taken up, had to be modified or abandoned; and, although few engineers would yet accept the conclusion that the screw was a better propeller than the paddle, it nevertheless became clear that their original impressions were to a certain extent erroneous, and might be erroneous altogether. Thenceforth they looked upon the screw with less distrust, and spoke with less dogmatism of its disqualifications. But at the outset it was not merely against physical difficulties, but against the almost universal sentiment of the engineering world, that the authors of the screw propeller had to work in accomplishing its practical introduction. Before these combined impediments countless inventors had succumbed, and it is difficult to overrate the merit of those who, without the consolations of sympathy, and in spite of a scepticism well nigh universal, preserved their own faith unskaken, and laboured steadily onward until their labours, pains, and perils, had a final issue in successful achievement.

After the Archimedes had accomplished the circumnavigation of Great Britain, she made a voyage to Oporto. This voyage was performed in 68½ hours, and was at the time held to be the quickest voyage on record. She also visited Antwerp and Amsterdam, passed through the North Holland Canal, and made a great number of trips to other places, leaving everywhere the impression that she had succeeded in demonstrating the prac-

ticability of propelling vessels by a screw in an efficient manner. She was next lent to Mr. Brunel, who performed various experiments with her at Bristol, after having fitted her with screws of several different forms. The result was considered so satisfactory, that the Great Britain, originally intended to be propelled by paddles, was altered to adapt her to the reception of a screw.

Meanwhile the Admiralty had determined upon adopting the screw for the service of the navy, and in the merchant service an opinion had arisen equally favourable to its eligibility. In 1840 and 1841, the Princess Royal was built at Newcastle, the Margaret and Senator were built at Hull, and the Great Northern, a vessel of about 1500 tons burthen, was laid down at Londonderry in Ireland. All these were merchant vessels. In 1841 the Rattler, the first screw vessel built for the navy, was laid down at Sheerness. This vessel, which is of 888 tons burthen, was launched in the spring of 1843. The Rattler was fitted with a screw the same in every respect as the screw of the Archimedes; namely, a double-threaded screw, of half a convolution. But the length of the screw was subsequently reduced, and it was found that the best results were obtained with a length of screw answering to one-sixth of a convolution. In the years 1843, 1844, and 1845, an extensive series of experiments was made in the Rattler, upon screws of various forms, and under varying circumstances of wind and water. The performance of the vessel was found to be so satisfactory, that the Lords of the Admiralty ordered twenty vessels to be fitted with the screw under Mr. Smith's superintendence. The screws introduced into these vessels were in every case double-threaded screws, set in the deadwood, after the fashion adopted in the Archimedes and the Rattler; and the whole of the screw vessels built in this country have been constructed upon this original type.

Such, then, has been Smith's career, and such its results: it now only remains that I should recapitulate the leading incidents in the career of Ericsson. His course has been nearly a parallel one, and it has been equally remarkable for its successful issues. Probably the exertions of either would have sufficed to introduce the screw into practical operation; but their simultaneous prosecution of the same object, was not, nevertheless, a waste of power. The progress of each was stimulated by the progress of the other, and their united force acted more powerfully upon the public, and procured for the screw a readier and wider introduction than could otherwise have been expected.

Captain Ericsson is a Swede, and formerly held a commission in the Swedish army. But for a number of years previous to the date of his patent for propelling vessels, he had been resident in England, and was well known as a mechanician of great originality and skill. His patent was taken out in July, 1836, and during that year he made numerous experiments in London, with a model boat about 2 feet long, to determine the merits of his propeller. The boat was made to sail round a circular vessel of water, the small engine in the boat being driven by steam conveyed through an upright pipe, which revolved at the centre of the vessel of water, and from whence a tubular arm extended to the engine. The results attained in this way were considered satisfactory, and in 1837 a vessel 45 feet in

length, 8 feet beam, and 3 feet draught of water, was built on the Thames, in order to test on a larger scale the merits of the invention. This vessel, which was called the Francis B. Ogden, was launched on the 19th April, 1837, and was tried on the 30th April in the same year. Her success was very remarkable. She at once attained a speed of 10 miles an hour. A schooner of 140 tons was towed by her at the rate of 7 miles an hour, and the American packet ship Toronto was towed at the rate of $4\frac{1}{2}$ miles an hour. These experiments were many times repeated with similar success, and during the summer of this year, Captain Ericsson invited the Lords of the Admiralty to inspect the performance of his little vessel. Accordingly, Sir Charles Adams, then Senior Lord of the Admiralty, Sir William Symonds, then surveyor of the navy, Sir Edward Parry, Admiral Beaufort, and other gentlemen of scientific and naval distinction, embarked at Somerset House on board the Admiralty barge, which was then taken in tow by the Francis B. Ogden, and the screw vessel with the barge in tow proceeded under steam to Limehouse and back, at a speed of about ten miles an hour. Notwithstanding this favourable experiment, Captain Ericsson, from some inscrutable reason, received no encouragement from the Admiralty; and he says that he at length discovered the impediment to lie in an idea taken up by the surveyor of the navy that, as the propelling power was applied at the stern, the vessel could not be steered in an efficient manner. It is well known that in the case of paddle vessels which have been lengthened considerably by the bow, it is afterwards difficult to keep them head to wind, from the propensity they acquire to turn round like a weather-cock, in consequence of the paddle-wheels, which answer to the pivot of the weather-cock, being brought so far astern; and the surveyor of the navy probably thought that in the case of a screw vessel with the propelling instrument at the very stern, this fault would be aggravated in a serious degree. Such a presumption was certainly a natural one at that time; nevertheless it is clear that it was still only a presumption, and the question was one to be settled, not by instinct, but by experiment. If any objection of this kind existed, it ought to have been stated in a candid manner; but this was not done, and Ericsson appears to have left this country in disgust, carrying his invention to America. The objection alleged to have been raised by the Admiralty authorities against Ericsson's plan, they could not raise against Smith's; for, before Smith put himself in communication with them, he had proved, by numerous conclusive trials, that his vessel *would* steer when going head to wind, and any hypothetical objection became untenable when it was confuted by facts which were well established and widely known.

In the winter of 1837, a canal boat, called the Novelty, was fitted with Ericsson's propellers, and was set to ply on the canal between Manchester and London. The propellers were only two feet six inches in diameter, and they were driven by an engine of only ten horse power; nevertheless the boat realized a speed of eight or nine miles an hour. This is the first example of a screw boat being employed for commercial purposes; but this boat was in a short time laid up owing to the failure of her owners.

At this juncture, Ericsson came into communication with an officer of the United States

navy, Captain Robert F. Stockton, a man of talent, energy, and means. Captain Stockton was so much pleased with the performance of Ericsson's experimental boat, that he ordered an iron vessel seventy feet long, ten feet beam, and fifty horse power, to be constructed and fitted with the new propeller. This vessel, which was called the "Robert F. Stockton," was launched at Liverpool in the month of July, 1838, and her first trial took place in the following September. The engines were direct-acting, connected immediately to the propeller.

In December, 1838, the "Stockton" arrived in the Thames, and on the 12th January, 1839, a trial of her capabilities was made in the presence of about thirty gentlemen of scientific eminence, when the performance was found to be highly satisfactory. On the 16th January, 1839, she towed four laden coal barges lashed alongside of her, so as to make a total breadth of fifty-nine feet, at the rate of five and a half miles an hour. In April, 1839, the "Stockton" left England under the command of Captain Crane, and proceeded under sail to America. In the latter part of 1839, Captain Ericsson proceeded to America, where he has remained ever since.

In all his earlier experiments, Ericsson employed two propelling wheels of the construction represented at page 24.; but in one of the trials at which Smith happened to be present, he suggested to Ericsson that he would probably obtain a better performance if he removed one of the wheels. This was accordingly tried, and Smith's anticipation turned out to be correct. The "Robert F. Stockton" was so constructed as to be able to use one wheel or two, as might appear advisable; but Ericsson's general practice since this time has been to use only one wheel.

Before Ericsson had been long in America, he had an opportunity of introducing his propeller into the United States navy. The "Princeton" war steamer was built and fitted with Ericsson's screw: the engines, which were also designed by Ericsson, were so constructed as to lie beneath the water line, and were, therefore, more out of the reach of shot. These were the first engines made upon this principle. Ericsson's propeller has been widely adopted in America for commercial purposes. Some hundreds of vessels in that country are now propelled by the screw, and Ericsson's propeller is the type which they have almost universally followed.

When Ericsson left this country, he consigned his interests to the guardianship of Count Adolph E. de Rosen, and, in 1843, Count Rosen received an order from the French government to fit a 44 gun frigate, the "Pomone," with a propeller on Ericsson's plan, and with engines of 220 horse power, which were to be kept beneath the water line, as in the case of the "Princeton." In 1844, the English government gave Count Rosen instructions to fit the "Amphion" frigate with a propeller and with engines of 300 horse power, which were to be kept below the water line in the manner of the engines of the "Pomone." The engines of these vessels were the first engines in Europe which were kept below the water line. They were also the first direct-acting horizontal engines, employed to give motion to the screw. The air pumps, which were also horizontal, were double acting,

and were furnished with canvas valves to diminish the shock incident to the shutting of large apertures where so high a speed had to be maintained. Both vessels were completely successful. The speed engaged to be given was five knots an hour. A speed of about seven knots an hour was actually obtained.

Ericsson's propeller having been the first successful propeller that was introduced into France, has in consequence obtained a wide acceptation in that country. Numerous war and other vessels have been fitted with it. At an early period of its introduction, the proprietors of some French screw coasting vessels, having heard of the satisfactory performance of certain screws in England which were provided with only two propelling blades, caused three of the six helical plates, or paddles, of which Ericsson's propeller is composed, to be removed from their vessels, leaving only three plates available for propulsion. During the summer months a benefit was found to result from this alteration; but in the winter months the vessels were found to be less efficient than before. It is now known that the number of blades which it is advisable to introduce into a propeller, depends conjointly on the depth and diameter of the propeller, and the amount of power, relatively with the resistance of the vessel, which has to be applied. A heavy cargo vessel which is restricted in the draft of water will be most effectually propelled by a screw of many blades, whereas a light and swift vessel, especially if not restricted in the draft of water, will be most advantageously propelled by a screw of few blades. In the case of heavy vessels, provided only with auxiliary power, screws of several blades are the best; and the screw should in every case be sunk as deeply as possible in the water.

Such then have been the respective merits of Smith and of Ericsson in connection with the practical introduction of the screw propeller; and in weighing those merits against one another, it appears to me that Ericsson has the advantage in mechanical capacity, and Smith in persistency of character. Ericsson, indeed, previous to his connection with the screw, was an accomplished engineer; Smith was only an amateur, with almost everything except the leading idea to learn. Ericsson's mechanical resources gave him means of overcoming difficulties such as Smith did not possess; and Smith had therefore to accept expedients then usual among engineers as his starting point, whereas Ericsson could reject those expedients in favour of others which his own ingenuity suggested. Thus, in bringing up the speed of the screw, Smith had to submit to the use of gearing, because that was the expedient which was approved by orthodox engineers; but Ericsson threw the dogmas of engineers to the winds, and coupled the engine immediately to the propeller. This comparative destitution of mechanical resources must have added to the difficulties of Smith's career. But his steady and resolute perseverance rose superior to all impediments, and the lead he took at the outset, he throughout maintained. Smith's patent was taken out on the 31st May, 1836; Ericsson's patent was taken out on the 13th July, 1836. The first trial of Smith's experimental boat was made on the 31st May, 1836; the first trial of Ericsson's experimental boat was made on the 30th April, 1837. In the summer of 1837, Ericsson exhibited his vessel to the Lords of the Admiralty, but without result, owing, as is alleged,

to the anticipated difficulty of steering. In September, 1837, Smith carried his vessel to sea, and showed, by repeated experiment, that the objection said to have been entertained in the case of Ericsson's plan, did not, at all events, exist in his. Ericsson's vessel appears to have been more efficient than Smith's. Its engine power was greater, and the mechanical details of its construction were more perfect. But Smith's vessel was also completely successful. She towed the "British Queen" steamer in the river, and also the "Lord William Bentinck," a heavily laden ship, at a speed of 2½ miles an hour, although there was an opposing breeze. The five miles already referred to as having been performed between Hythe and Folkestone in three quarters of an hour, were accomplished against a strong wind, which, as the sailors phrase it, blew "dead in her teeth," and the average speed realized, in a voyage of 400 miles, was eight miles an hour. Both vessels were therefore successful, but Smith's vessel was first in order of time.*

I do not think it necessary to dwell here upon the experiments made by Woodcroft, Lowe, and others, whose pretensions have been put forward in connexion with this subject; for I do not consider that those persons, whatever else they may have done, have contributed in any measure to the practical introduction of the screw propeller. Woodcroft's experiments were made in a boat on the Irwell, near Manchester, in 1832. A long copper spiral, with a greatly increasing pitch, was placed on each side of the boat, and these spirals were turned by manual labour, as in Lyttleton's experiment in 1794. A speed was thus realised of about four miles an hour. Lowe's trials were made upon the Thames in 1838, in a boat called the "Wizard." But before that time, Smith and Ericsson had resolved the problem of propelling successfully by means of a screw.

* The following screws were exhibited by Mr. Smith at the Great Exhibition, and they relate the history of the invention without the aid of words: — 1. A screw of two entire turns of a single thread, as applied to his working model in 1835; and subsequently to an experimental boat of 6 horse power in 1836. 2. A screw of one entire turn of a single thread, as applied to the same boat; and subsequently to the "Archimedes," a vessel of 237 tons, and 80 horse power, in 1838. 3. A screw of two half turns of a double thread, as applied to the "Archimedes" in 1839; and subsequently to the "Princess Royal," of 50 horse power, in 1841; the "Great Northern," of 4515 tons and 360 horse power, in 1842; and H.M.S. "Rattler," of 888 tons and 200 horse power, in 1843. 4. The same screw, reduced to two quarter turns of a double thread, and tried experimentally in H.M.S. "Rattler," in 1844. 5. The same screw, reduced to two one-sixth parts of a turn, as tried in H.M.S. "Rattler," in the same year; H.M. steam yacht "Fairy," in 1845; and which is now applied to upwards of 40 ships in the British navy of all classes up to 80 guns; and very generally used, with some few modifications as regards the number of threads and variations in the pitch, in nearly 200 vessels in the merchant service. The same screw was further reduced to two one-eighth parts of a turn, and tried in the "Rattler," but the result was inferior to the last. 6. The actual propeller used by Mr. Smith in his experimental boat of 6 horse power in 1836–7, on the Paddington canal, and with which she performed the *first sea trip* ever made with a screw propeller. 7. The original screw, two inches diameter, made by Mr. Smith, and applied to his working model boat in 1835. 8. An original working model of the "Archimedes," with a screw of one entire turn. 9. Two models, showing the manner in which 1, 2, 3, 4, and 5 are made, in sections or portions of a screw, each section being half an inch in length, or one forty-eighth part of the pitch. 10. *Fac simile* of a model of the screw propeller of H.M. steam yacht "Fairy," presented by Mr. F. P. Smith to her Most Gracious Majesty Queen Victoria, on board the "Great Britain" steam ship, at Blackwall, on the 22nd of April, 1845.

It is maintained on Lowe's behalf, that he was the first person who used segments of screws in combination with a shaft below the water-line. But Ericsson used this combination successfully before the time of Lowe's patent, as did also Brown, who fitted a vessel with a screw propeller in 1825; and although in some of Brown's trials flat blades set at an angle with the shaft were employed, yet, in other cases, he employed helical blades. It is true Brown's experiment led to no practical result, but neither did Lowe's; for the question had already been practically settled before his patent was taken out: and although Smith did not, in his original trials, arrive at the best length of screw, yet the accident which carried away half of the screw of his experimental vessel in the beginning of 1837, showed that the length might be diminished with advantage. *How far* it might be advantageously diminished was not then ascertained. Neither was it ascertained by Lowe; but was only determined after the experiments made upon the "Rattler" in 1844. It does not appear, therefore, that Lowe was either the first person who suggested the use of segments of a screw, set on a revolving axis below the water-line, or that it was from his experimental investigations the proportions of screw now in general use have been derived. No one would have been disposed to adopt those proportions the more readily merely because Lowe had introduced them into a patent; for he was not known to the world as a person of engineering reputation, whose opinion on such a subject would carry weight; and there was no such self-evident superiority in the use of a short screw over a long one, that its bare announcement would command universal acquiescence. The best length of screw could not be settled at random, or by a lucky guess; but before results of any practical authority could be arrived at, a series of carefully executed experiments upon the large scale was necessary, which should determine at what point the abridgment of the length of the screw ceased to be advantageous. Such a series of experiments was performed by Smith upon the "Rattler," and the facts thereby elicited have ever since been the guide of engineering practice.

These considerations appear to me conclusive, as regards the moral value of Lowe's pretensions in connexion with the introduction of the screw propeller. Their legal value I do not pretend to discuss; nevertheless it seems proper to repeat, in connexion with this branch of the subject, that, long before the date of Lowe's patent, various persons, both in this country and abroad, had taken out patents for employing helical blades set on an axis, revolving beneath the water, in the propulsion of vessels. For example, Bramah's patent for propelling vessels by means of blades like the vanes of a windmill set on an axis, revolving beneath the water at the stern, was taken out in 1784, and every person must have been free to use such blades, or such an instrument, after that patent had expired. Now the blades of windmills are portions of a screw; and in Maclaurin's "Fluxions," published more than a century ago, it is explained that the arms or sails of windmills should be so made as to form a portion of a true helix. The same directions are repeated in Fergusson's "Lectures," and in various other works

on Mechanics. According to Smeaton's practical rules, however, for setting out windmill sails, they will not form a portion of a true helix, a certain deviation from that form having been found to give the best results; but in screw propellers it is also found that the best results are obtained when there is some deviation from the helical form. Bramah, in his specification, states that the fans or wings which he proposes to employ in propelling, are similar to those in the fly of a smoke-jack, or to the vertical sails of a windmill. Since, however, the vanes of a smoke-jack are generally flat, and the sails of a windmill are generally curved, it has been maintained that the description is inconsistent with itself, and that the patent should therefore be held to be invalid. This supposed inconsistency, however, I can in nowise discern; for a smoke-jack is substantially a small windmill; and although the vanes of a smoke-jack are very frequently made flat for facility of manufacture, they are not necessarily or always made so. Sometimes the vanes of a windmill are made flat, where cheapness of construction is the main consideration; but it is all the while perfectly well known that such a mode of construction is not the most efficient, and is not regulated by just principles. The blades of smoke-jacks have, for a like reason, generally been made flat; but they have, in many instances, been made helical, and in a few cases with an increasing pitch. It has been known very widely for at least a century, that a helical form of the blades is that which science prescribes; and there cannot be much inconsistency of representation in coupling windmills and smoke-jacks together, when the two instruments are substantially identical. That this identity of principle was very well known to Bramah can hardly be doubted, when it is recollected that he was not a superficial or thick-witted adventurer, but one of the most talented engineers of his time; and Trevithick and Millington, also engineers of eminence, subsequently employed the same language when describing the modes of propelling which they proposed to introduce. The conclusion at which we must ultimately arrive, however, will not materially differ, if the blades of smoke-jacks be held to be necessarily flat, and those of windmills necessarily helical; for both flat and helical blades are used for propelling vessels at the present time, and any terms of definition seeking to include both varieties of propeller, could not differ materially from those which Bramah employed.

With these remarks I conclude this chapter on the practical introduction of the screw as a propeller; and, while I am quite sensible of its many deficiencies, I believe that it will be recognised by the engineering community as an accurate statement of the facts of the case, and as a just award of the merit pertaining to particular inventors. To engineers, it has long been known that F. P. Smith has been the author and establisher of the art of screw propulsion, — at all events in this country; and engineers are certainly as well qualified to form a just opinion on this subject as any other class of the community, and have as little temptation to strain their real convictions. Other screw patentees there are, who, like Indian mercenaries, have lain by until the battle was fought by Smith and Ericsson, and have then come forward to claim the fruits of victory; and courts of law, bewildered by questions they did not understand, have permitted claims to be

entertained which ought to have been at once disallowed. But whatever decrees may be elsewhere pronounced, the judgment of the public is pronounced already, and will be ratified by posterity. And when the people of future times inquire in what way, or by whose instrumentality, the art of propelling vessels by a screw was first established, they will learn that this important amelioration was accomplished, not by any eminent engineer or learned academician, but by a farmer at Hendon, called, like another Cincinnatus, from the plough, to advance the interests of his country. Against that time, other names, at present far more imposing, will have faded from the recollections of mankind; but the name of the originator of a new art lives as long as the art itself, and gathers new lustre by the lapse of years.

But, while rendering to Smith and to Ericsson the honour to which they are justly entitled, it would be unfair to pass over, without acknowledgment, the services of those who were their coadjutors in this important work, or by whom their progress was assisted. And first among these auxiliaries must be mentioned Mr. Wright the banker, but for whose aid Smith's patent would perhaps never have been taken out; or his speculations would have died out perhaps, without fruit, like those of his predecessors. To Messrs. Rennie also a large amount of credit is due, for, among engineers, they were the first who augured favourably of the issue of the project, and they also had a considerable pecuniary stake in the result. The gentlemen composing the Screw Propeller Company advanced a large sum of money for the construction of the "Archimedes," and for other purposes connected with the prosecution of the undertaking, and this money has not been repaid by any profits accruing from the success of the invention. Captain Chappell and Mr. Lloyd appear to have acquired a very favourable opinion of the screw at an early period of its history, and its adoption for the service of the navy was the result of the favourable report they gave of its performance. Mr. Brunel also recommended it to be introduced into the "Great Britain" instead of paddles, which had been originally intended; and this was done at a time when the screw was still regarded with doubt by a large part of the engineering and nautical communities. In the case of Ericsson, his early progress appears to have been mainly aided by Mr. Francis B. Ogden, the United States consul at Liverpool; and it was after him that Ericsson's experimental vessel was named. Ericsson's subsequent connexion with Captain Stockton of the United States navy has been already narrated; and to Captain Stockton's efforts much of Ericsson's subsequent success in America must be ascribed.

CHAPTER III.

SCIENTIFIC PRINCIPLES CONCERNED IN THE OPERATION OF SCREW VESSELS.

FLUID RESISTANCE.

THE laws of Fluid Resistance are still involved in much obscurity; partly, no doubt, from the inherent difficulty of the subject, but mainly from the want of independent research on the part of the various authors who have undertaken the elucidation of the subject. It is an easier thing to copy than to think; and the mistakes incidental to the researches of Newton and other eminent philosophers, have, by the reverential acceptation of succeeding writers, been expanded into mischievous fallacies, which have at length overrun various departments of physical science, and are now found most difficult of eradication. Under these circumstances it becomes expedient to investigate, in a plain and practical way, a few of the leading principles of mechanics which bear upon the question before us, as there will be less trouble in taking a new course altogether, than in clearing away the errors with which the beaten track is found to be choked up.

Mechanical power is pressure acting through space; and the amount of mechanical power developed by any combination is measurable by the amount of the pressure, multiplied by the amount of space through which the pressure acts. A pressure of 10 lbs. acting through a space of 1 foot, represents the same amount of mechanical power as a pressure of 1 lb. acting through a space of 10 feet; and 10 lbs. gravitating through 1 foot, or 1 lb. gravitating through 10 feet, represents ten times the amount of mechanical power due to the gravitation of 1 lb. through 1 foot. In the same way, 1000 lbs. gravitating through 1 foot, is equivalent to 1 lb. gravitating through 1000 feet; and, in general terms, the weight or pressure multiplied by the space through which it acts, represents the power universally. If, therefore, a body falls freely through space by the operation of gravity, since it parts with none of its power during its descent, the whole power must be accumulated in the falling body in the shape of momentum; and, at the instant of reaching the ground, the body must have such an amount of mechanical power stored up in it as would suffice to carry it up again to the position from which it fell, if the power were directed to the accomplishment of that object. The amount of mechanical power, therefore, in any moving body, is measurable by the weight of the body, multiplied by the space through which it must have fallen by gravity, to acquire the velocity it possesses; and this fundamental law, if distinctly apprehended, and kept constantly in recollection, will ensure exemption from the fallacies which prevail so generally among English authors in reference

to such subjects. In Newton's "Second Law of Motion" it is maintained that "the change or alteration of motion produced in a body by the action of any external force, is always proportional to that force," from whence it is inferred, that to produce twice the quantity of motion in a body, will require just twice the power; and this is the doctrine maintained by Robison in his "Mechanical Philosophy," and by Hutton, Gregory, and most other English authors who have undertaken to illustrate such questions. Nevertheless, there is no doubt whatever that the doctrine, though resting on the authority of Newton, is altogether erroneous, as was shown by Leibnitz at the time of its promulgation, and subsequently by Smeaton, who, by a series of carefully executed experiments, proved very clearly that it required four times the amount of mechanical power to double the velocity of a moving body, that was necessary to put it into motion at first; and consequently that the momentum of moving bodies of the same weight varies as the squares of their respective velocities. The soundness of this conclusion is made manifest by a reference to the law of falling bodies, by which it will be found that it is necessary a body should fall through four times the height to double its ultimate speed; nine times the height to treble its ultimate speed, and so on; showing that the height, and therefore the power exerted in creating the motion, must be as the square of the ultimate speed; and consequently, that the ultimate velocities of all falling bodies will be as the square roots of the heights from which they have respectively descended. In the case of two bodies of equal weight, therefore, moving in space, but of which one moves with twice the velocity of the other, the faster will have four times the amount of mechanical power stored up in it that is possessed by the slower; for it must have fallen from four times the height to acquire its doubled velocity, and the relative quantities of power capable of being exerted by bodies of the same weight, is measurable in all cases by the spaces through which the weight or pressure acts. A cannon ball moving with a velocity of 2000 feet a second, has four times the momentum of a cannon ball, of equal weight, moving with a velocity of 1000 feet a second; and every particle of a stream of water moving with a velocity of 10 miles an hour, has four times the momentum of every particle of a stream of water moving with a velocity of 5 miles an hour. Every particle of the faster stream, therefore, will exert four times the effect in impelling any body on which it impinges, that is exerted by every particle of the slower stream. But in the faster stream, not only will every particle impinge with four times the force, but there will be twice the number of particles impinging in a given time; and a quadrupled force for each particle, and twice the number of particles striking in a given time, gives an effect eight times greater in a given time with a double velocity of the stream. Accordingly, it is found that in a water or wind mill, when the velocity of the current is doubled, the power exerted is about eight times greater than before; and it is also found that a steam vessel, to realise a double velocity, requires about eight times the amount of power: but these results, it is obvious, have reference, not merely to the increased velocity of the particles of matter, but to the larger number of them brought into operation; and any *given quantity* of water, if flowing with a double velocity, would only exert four times

the power exerted before. In the same manner a steam vessel, to accomplish any given voyage in half the time, would require four times the quantity of coal previously consumed; for although eight times the quantity of coal would be consumed per hour, yet only half the number of hours would be occupied in accomplishing the distance. The number of particles of water to be displaced by a vessel in performing *any given voyage*, is the same, whatever the velocity of the vessel may be; but the number of particles displaced *in the hour* differs with every different velocity, and the power expended must consequently vary in a corresponding proportion. It may hence be asserted, generally, that the power or dimension of engine necessary to propel a vessel, increases as the cube of the velocity required to be attained; but the consumption of fuel will only increase as the square of the velocity, looking to the number of miles of distance actually performed.

It may be useful to compare with these doctrines the statements of some of the most eminent authors who have treated of Theoretical Mechanics. Robison, in his "Treatise on Mechanical Philosophy," vol. ii. page 269., gives the following as the fundamental proposition of the doctrine of the resistance of fluids:—"The resistances and (by the third law of motion) the impulsions of fluids on similar bodies, are proportional to the surfaces of solid bodies, to the densities of the fluids, and to the squares of the velocities jointly;" and Robison says that he has borrowed the demonstration from Newton's "Principia," book ii. proposition 23. In Tredgold's work on the Steam Engine, there is an Appendix on paddle-wheels by Mr. Mornay, where the same doctrines are propounded. At page 122. Mr. Mornay writes as follows:—"In order to be able to calculate the absolute amount of power required to produce a given effect, it is necessary to be acquainted with the laws which govern the resistance of fluids to the motion of solid bodies in them, which are generally admitted to be based on the following theorem. If a plane surface move at a given velocity through a fluid at rest, in a direction perpendicular to itself, the resistance is proportional to the density of the fluid, and to the square of the velocity of the plane."

He adds, "It is assumed that the resistance to a plane moving in a fluid at rest, is equal to the pressure of the fluid on the plane at rest, the fluid moving at the same velocity and in the contrary direction to that of the plane in the former case; on which hypothesis the ratio of the square of the velocity is explained in two very different ways. The first is, that 'the resistance must vary as the number of particles which strike the plane in a given time, multiplied into the force of each against the plane; but both the number and force are as the velocity, and consequently the resistance is as the square of the velocity.' The second explanation is, 'that the force of the fluid in motion must be equal to the weight or pressure which generates that motion, which it is known is equal to the weight of a column of the fluid, whose base is equal to the area of the surface and altitude, the height through which a body must fall to acquire the given velocity.'" These explanations, Mr. Mornay adds, are extracted from Dr. Gregory's "Treatise on Mechanics;" and in the works of Hutton, and most other English writers on theoretical mechanics, similar statements are to be found: yet it is quite certain that they are altogether erroneous, and

their original promulgation is traceable to the accident of the mechanical force resident in moving bodies having been set down by Newton as measurable by the velocity, instead of by the square of the velocity, as is now known to be the case. If, therefore, the resistance varies as the number of the particles multiplied by the force of each particle, it must vary as the cube of the velocity; for the number of particles varies as the velocity, and the force of each particle varies as the square of the velocity; and the velocity, multiplied by the square of the velocity, is obviously the cube of the velocity. It consequently cannot be true that the impact of a fluid in motion will produce a pressure only equal to that due to the head of fluid that will produce the motion, as was long ago perceived by Daniel Bernouilli. For, as water issuing from a reservoir has the same velocity as any heavy body would acquire by falling freely from the level of the surface of water in the reservoir to the level of the issuing stream, and as, by the laws of falling bodies, the ultimate velocity of a falling body is just double its mean velocity, it is clear that a jet issuing horizontally, after having acquired the ultimate velocity due to the head, will pass through a distance equal to twice the distance that a body would pass through in descending from the level of the water-surface to the level of the orifice. Hence Bernouilli inferred that the accumulated hydraulic pressure by which a vein of heavy fluid is forced out through an orifice in the side or bottom of a vessel, is equal to the weight of a column of the fluid, having for its base the section of the vein, and for its height *twice* the fall productive of the velocity of efflux.

Bernouilli's theory was adopted and still further developed by Euler, who gives a formula for ascertaining the percussive effect of a jet of water on a plate, which is as follows:—

Let R = force of impact in permanent percussion.
a = area of vein.
H = height due to actual velocity of jet.
h = height due to velocity of reflected water.
ϕ = angle of reflected water to axis.

$$\text{Then } R = 2aH\left(1 - \frac{\sqrt{h}}{\sqrt{H}} \cos.\ \phi\right).$$

The experiments of Morosi and Bidone lend material confirmation to the doctrines of Bernouilli and Euler on this subject. Euler says, that the theoretical value of the percussion of a fluid vein may increase until it is equal to the weight of a fluid column of the same base as the section of the vein, and of a height four times greater than that due to the velocity of the vein. Bidone found that the sudden shock of a jet upon a plate is to the force of the jet, when permanent, as 1·84 to 1; but this effect may be in some measure attributed to the momentum acquired by the parts of the instrument by which the percussive force was measured.

According to the results of the experiments made by Colonel Beaufoy, for ascertaining the resistance of bodies moving through water, it appears that at low speeds, such as two knots an hour, the weight necessary to draw the body varies as the square of the velocity; but at higher speeds, such as eight knots an hour, the weight necessary to draw the body does not increase in quite so great a proportion as the square of the velocity. The weight necessary to overcome the friction of a body moving in water, appears to vary at about the 1·7th power of the velocity; but the proportion appears to diminish slightly with an increase of speed. The friction upon a square foot of plank, moving through the water in the manner of the bottom of a ship, was found to be equal to a weight of ·014 lbs. with a velocity of one nautical mile an hour; or, in other words, it would require a weight of ·014 lbs., acting on a string passing over a pulley, to overcome the friction of a square foot of plank, when passing through the water at a velocity of one nautical mile per hour. At a speed of two nautical miles per hour, the friction was found to be equal to a weight of ·0472 lbs; three miles an hour, ·0948 lbs.; four miles an hour, ·153 lbs.; five miles an hour, ·2264 lbs.; six miles an hour, ·3086 lbs.; seven miles an hour, ·4002 lbs.; eight miles an hour, ·5008 lbs.; and, by carrying the law up to thirteen nautical miles per hour, the weight necessary to overcome the friction upon each square foot is found to be about 1·2 lbs. At two nautical miles per hour, the weight necessary to overcome the friction varies as the 1·823 power of the velocity. At eight nautical miles per hour, the weight necesssary to overcome the friction varies as the 1·713 power of the velocity. In the gross, it may be asserted that the weight necessary to draw any body through the water varies nearly as the square of the velocity; but the distance through which the weight descends varies also as the velocity, so that the *power expended* in any given time, varies nearly as the cube of the velocity. It does not, however, follow that the resistance is made up in the manner supposed by Newton's hypothesis; for water does not consist of little balls which strike independently of one another, and the mutual interference of the particles when the water is reflected from the body struck, the viscidity, friction, and other elements, introduce different conditions from those which that theory supposes. Indeed, it is nearly certain that, while the aggregate resistances vary in the manner which has been stated, with such speeds as those usual in steam vessels, the elementary resistances of which this aggregate is made up, follow different laws altogether. Don Georges Juan, one of the ablest authors who has treated of the theory of naval architecture, and one whose works are but little known in this country, after recapitulating the errors of preceding writers, lays down a new theory of the resistance of fluids, which he states is in perfect accord with fact, and with the known principles of science. He states that the resistances of bodies moving in fluids vary as the densities of the fluids, as the surfaces of impact, as the square roots of the depths to which they are submerged, as the simple speeds, and as the simple sines of the angle of incidence under which the surfaces are struck. This is the law which is followed when the surface is completely immerged in the fluid, and where the anterior part of the body resembles the posterior part. But when one part of the surface is out of the fluid,

there is a new quantity to consider in the resistances which depend in no degree upon the surface struck, but which proceed simply from the velocity; and this quantity is neither as the simple velocities, nor as their squares, but as their fourth powers. In certain cases, there ought yet to enter a third quantity into the expression of the resistance, which is as the squares of the velocities, and as the surfaces struck; and, finally, there are circumstances under which it is necessary to have regard to a fourth quantity, which does not in any degree depend upon the speed, but only upon the surfaces struck. According to this theory, therefore, the resistances depend upon four distinct quantities, of which some vanish in certain cases; and in researches respecting sailing ships, these quantities reduce themselves usually to one, which is the first of those which have been mentioned. Nevertheless, in cases of a great velocity, it is necessary to take the second quantity into account; whilst to the third, which heretofore has been the only one which has claimed attention, it is usually unnecessary to pay regard.

It is also stated by this very able author, that it follows from his theory, that ships may not merely sail as fast as the wind, but faster than it; a result well known to nautical men to be sometimes attained. He states, also, that his theory accords with the results of experiments made with kites, and also with the results of Smeaton's experiments to determine the force with which water acts to turn water-wheels. And the errors in the previously accepted law of the resistance of fluids, vitiate, he says, all the calculations which had been antecedently made touching the angle which the sail should make with the keel and with the wind, the pressure upon the sail with reference to stability, and other questions of that nature. In previous theories, the curve of the sail, and the angle which the vessel assumes from the side pressure of the wind, had been disregarded, and the pitching and rolling motions of the vessel had been considered as referable to the laws which govern the operation of pendulums; whereas, those motions are, in fact, mainly governed by the movements and dimensions of the waves. Prows of the form of the solid of least resistance, which had often been recommended by mathematicians as advantageously applicable to ships, would have, he says, this difficulty attending them, that in an agitated sea they would cause the bow to be buried in the waves; and, to say nothing of other objections, the shocks of the sea, and the increased immersion, would cause a diminution of speed which would neutralise the benefit resulting from the finer form. This objection, however, it is obvious, chiefly holds where the bow is made sharp without a corresponding sharpening of the stern.

When the sail of a vessel, considered as a plane surface, is struck by the wind, the direction in which the sail would move, if not resisted, is in a line perpendicular to its surface. This line is called the line of moving force; and the line which would be followed by the aggregate sails of a ship standing at different inclinations, is called the mean line of moving force. If the vessel was subjected to no other force or impediment than that which she receives from the sails, she would always follow the direction of the mean line of moving force, and the same result would follow if the hull consisted of a portion of a

cylinder or sphere. But in a vessel of the ordinary form, the resistance of the water against that side which the vessel presents most to the impulsion of the water being greater than that sustained on the opposite side, it is manifest that this inequality of resistance will turn the vessel out of the mean line of moving force. It is also clear that, if this resistance was infinite in reference to that encountered by the stem, or, what comes to the same thing, if the vessel did not experience any resistance or difficulty in cleaving the water, she would go along the line of the keel, whatever position it occupied in relation to the mean line of moving force. Since, however, the resistance which the water makes to the bow is neither nothing, nor infinitely small in relation to that which is encountered by the side, it is natural to suppose that the course of the vessel will follow neither the line of the keel nor the line of moving force, but will follow a third line intermediate between the two preceding, making with the keel the angle which is called the angle of lee-way. In vessels with the same lateral resistance, the amount of lee-way will mainly depend upon the facility with which the vessel passes through the water; and as an auxiliary screw virtually diminishes the resistance encountered by the hull, screw vessels will be more weatherly than ordinary sailing vessels. In light beam winds, also, the screw will operate advantageously in bringing the vessel continually into a new stream of wind; so that the wind will not stagnate against the sails, and such of its power as is really brought to act, will also be more effectually used up. To obtain a maximum effect from a given quantity of wind, the sails should move with about half the velocity of the wind itself; and if the vessel moves with a very small velocity, the wind will be reflected from the sails with nearly the same velocity it had at first, and only a small amount of power can be communicated in such a case. It follows, consequently, that vessels maintaining a considerable rate of speed through the water, whether by the aid of steam or otherwise, will, under most circumstances, utilise or use up a larger proportion of the power of the wind than slow vessels, from the sails of which the wind is reflected with nearly its original force. Whatever power or velocity the wind loses the vessel acquires, and the object which should be sought to be attained, therefore, is to intercept as large a column of the wind as possible, and to cause it to be reflected from the sails with the least possible force. The size of the column, and the difference between the initial and residual velocities, represents the power gained by the ship.

It would be foreign to the design of the present work to enter further into the discussion of these topics, than to show the doubt and discrepancy which still hangs over the question of fluid resistance, and to indicate, in a general manner, certain laws or axioms which may be accepted as an approximation to the truth, having been derived, not from theoretical considerations, but from experiments frequently repeated upon actual vessels, of different forms and of different proportions of power. And whatever theory of fluid resistance may be eventually adopted, it is at least certain that in the case of ordinary vessels and ordinary velocities, the power necessary to accomplish any particular speed which may be prescribed, is ascertainable by the equation $\frac{S^3A}{C}$=horse power,

53239

where S is the speed in miles per hour, A the immerged sectional area of the vessel in square feet, and C a certain number, or co-efficient, which varies with the form of vessel employed; and in the Table of the Performance of Screw Vessels given in the Appendix, will be found the co-efficients applicable to the screw vessels of the navy. This co-efficient, as set down in the table, is obtained by multiplying the cube of the speed, in nautical miles per hour, by the immerged midship section of the vessel in square feet, and dividing by the indicated horse power of the engine; and a number is thus obtained, by the aid of which the power necessary to accomplish other speeds, with a similar form of hull, may be approximately found.

In all cases of the impact of water upon a solid body, the water is reflected or rebounds from the surface of the body with a certain velocity, occasioning thereby a corresponding loss of power, if the force or reaction of the water has to be employed for any purpose. In undershot water-wheels, which are driven by a stream of water, and also in paddle-wheels, especially if they strike the water with any considerable shock, a material diminution in the useful effect is produced from this cause. Bidone concludes, from his experiments, that water giving out its power by impact, will only produce half the effect that is due to its weight and velocity. In undershot water-wheels, it is found that somewhat less than half the theoretical power of the stream is on the average available in turning round the wheel; and in steam vessels, propelled by common paddle-wheels, in which the float surface is generally too small, it is found that not much more than half the power of the engine is available in the propulsion of the vessel, the residue being lost in creating a disturbance of the water. It consequently becomes important, in every kind of propelling apparatus, to take care that the least possible disturbance of the water shall be occasioned; that in forcing the vessel forward through any given distance, the water upon which the propeller reacts shall be forced backward through the least possible distance; and, other things being equal, that species of apparatus will be the most efficient in propelling, which most effectually fulfils this condition. The whole of the engine power must be expended in some shape or other, and all the power which is not expended in disturbing the water, must be expended in propelling the vessel. In paddle vessels, the larger the floats are made, as a general rule, the less will the water be disturbed, and the more will it approximate in resisting power to a solid. It consequently becomes an important indication, both in screw vessels and in paddle vessels, to make the pushing or resisting area of the propeller as large as possible, as the slip of the propeller will be less the larger the hold it has of the water, and the speed of the vessel will be correspondingly increased. There are practical limits, however, to the dimensions of the floats in paddle vessels, which greatly add to the difficulty of obtaining high rates of speed through the instrumentality of paddles alone; for it will not answer well to make the floats very deep, else the water will not gain access to the heart of them, and there are obvious objections against making them very long.

When a locomotive is put in motion on a railway, the force with which the driving-

wheel revolves will be less than the force urging the piston, just in the proportion in which its velocity is greater; and if the circumference of the driving-wheel is twenty feet, and the double stroke of the piston two feet, then every 100lbs. of pressure on the piston will be balanced by 10lbs. pressure on the driving-wheel. If, therefore, 11lbs. of counteracting pressure were to be applied to the driving-wheel for every 100lbs. pressure upon the piston, the engine would first be brought to a state of rest, and would then revolve in the opposite direction. If, however, instead of applying a greater counteracting pressure, the carriage were held fast, and the wheels suffered to revolve upon the rails, the velocity of the engine would go on increasing until the resistance occasioned by the friction of the revolving wheels just balanced the pressure upon the pistons, and at this speed the wheels would continue to revolve so long as the supply of steam was maintained. In a steam vessel, the operation of the engines upon the paddle-wheels or screw, is much the same as in the case just recited. If a steam vessel be tied at the stern, and the engines be then set into revolution, their velocity will go on increasing until the resistance at the centre of pressure of the paddle-wheels just balances the pressure on the piston,—the centre of pressure being a point in the depth of every float at which the pressure above and below it is the same, or at which the aggregate pressure may be supposed to be collected. Now, as the resistance at the centre of pressure must just balance the pressure upon the piston, it follows that the pressure urging forward the vessel will be the same, whether the vessel is at rest or in motion, supposing always that the engines are adequately supplied with steam; and the resistance created at the centre of pressure will be the same, whether the paddle floats are large or small,—only, if they be small, a greater velocity of revolution will be necessary to create the resistance requisite to balance the pressure upon the pistons, and a larger consumption of steam will be occasioned, without any countervailing advantage. If, however, the wheel be diminished in size, the pressure upon every paddle-float will be increased, for a larger resisting area will then be necessary to balance the pressure upon the pistons, in consequence of the diminished length of leverage acting against that area; and when a small diameter of wheel is employed, either a larger area of float is necessary, or else the centre of pressure will pass with a greater velocity through the water, which is tantamount to saying that the slip will be increased. In the case of the screw, similar results will be found to ensue. Setting aside the loss of power occasioned by the friction of the screw when revolving in the water, and the resistance occasioned by its cutting edge, it will be obvious that the forward thrust of the screw shaft will be the same whatever the dimensions of the screw itself may be, for the velocity of rotation will go on increasing until the resistance which the screw encounters balances the pressure on the pistons; and if the pressure on the pistons be considerable, so will be the thrusting or pushing force of the screw. If the screw, however, be of inadequate dimensions, then the velocity of its rotation will be much greater than what answers to the speed of the vessel, and there will be a larger consumption of steam by the engine than would be necessary, if the screw were of a larger size. It is hence obvious that a very small diameter of screw, relatively with the midship section,

or with the resistance to be overcome, is inadvisable, just as a small area of float-board is inadvisable in the case of a paddle-wheel. Nevertheless, it is possible to make a screw too large, just as it is possible to make a vessel too sharp, and that point will be attained when the friction consequent upon the increased diameter, the resistance arising from the extension of the cutting edge, and other analogous sources of loss, more than balance the loss arising from the slip. From some experiments which were made by Mr. Brunel at Bristol, in 1840, with half a disc of metal 5 feet 9 inches diameter, set on a shaft revolving in water, it appears that it took 6·4 horses' power by the indicator to give the shaft a velocity of 101 revolutions per minute, when the semi-disc revolved in air without the contact of water; and that it took 9 horses' power by the indicator to give the shaft a velocity of 100 revolutions per minute, when the semi-disc revolved in water. Hence it was inferred, that the resistance to the semi-disc which a screw with an equal amount of surface, and an equal length of cutting edge, suffers from the water at a speed of 100 revolutions per minute, will be overcome by about 3 horses' power of the engine. This is equivalent to a weight of about 55 lbs. at the end of the arm, or at the circumference of the disc, hindering its revolution for 5 feet 9 inches, or 69 inches $\times$ 3·146 $\div$12=1806·42 feet per minute, and 3 times 33,000 lbs. or 99,000lbs. $\div$1806·42=55lbs. very nearly; but the weight will of course be greater than this at the centre of effort of the screw. Probably the resistances were somewhat underrated in these experiments, as no adequate precautions seem to have been taken to prevent the water in which the half disc revolved, from itself acquiring some rotatory motion. Beaufoy's experiments, already mentioned, enable an approximate estimate of the friction to be made; and such a result may be also arrived at by comparing the actual with the theoretical discharge of water through pipes. The theoretical velocity of water flowing from a pipe is the same as that of a heavy body falling from the level of the water in the cistern to the level of the orifice. The actual velocity is ascertainable by the following rule:—Multiply 2500 times the diameter of the pipe in feet by the height in feet, and divide the product by the length in feet, increased by 50 times the diameter; the square root of the quotient will be the velocity of discharge in feet per second. If we take the rubbing surface of the screw, reduced to an equivalent number of square feet, moving with the same average velocity, and if we take a pipe of such a diameter that a pound of water just covers a square foot of its internal surface, then, if this pipe be set at such a declivity that the velocity of the water within it comes up to the velocity of the screw, but does not exceed it, it is clear that the gravitation down the plane of the water in a foot length of the pipe will be the same as the friction in pounds upon a square foot of its internal surface, which again is equal to the mean friction in pounds upon a square foot of the surface of the screw. All rivers which flow with a uniform velocity have the gravitation of the water down the inclined plane of the bed balanced by the friction of the water upon the bottom and sides of the channel; and with any given declivity of bed, the velocity of a river will increase in proportion to its depth and size, there being relatively less rubbing surface when the volume of water is great.

It will be obvious from the general tenor of the foregoing observations, that the laws of fluid resistance have not yet been ascertained in so conclusive a manner as to warrant reliance upon them in any case which differs materially from cases commonly occurring in practice. In steam vessels of the usual form, and with the ordinary rates of speed, the resistance of the vessel, or what comes to the same thing, the amount of thrust necessary to be imparted by the paddle or screw shaft, increases very nearly as the square of the velocity; and as in order to communicate twice the velocity to the vessel, the engines must not merely be able to work against four times the load, but must also move with twice their previous speed, the power expended in a given time will be nearly as the cube of the velocity of the vessel. Contrariwise, if the engine power of a vessel be increased while her immersion and other elements remain without alteration, her speed will be increased in the proportion of the cube root of the increased power. If, therefore, the engine power of a given vessel be doubled, her speed will be increased in the proportion of the cube root of 1 to the cube root of 2, or in other words in the proportion of 1 to 1·25. If the original speed of the vessel therefore were 10 knots an hour, the effect of doubling the power would be to raise the speed to $12\frac{1}{2}$ knots an hour. While however this result may be confidently expected in the case of such speeds as 10 or 12 knots per hour, it does not follow that the law will apply in the case of such speeds as 18 or 20 miles an hour, supposing the same form of vessel to be retained. Indeed it is well known that at high velocities the resistance of any given vessel increases in a higher ratio than the square of the speed. The main cause of this accelerated increase in the resistance in the case of high speeds, is traceable to the inability of the water to close in at the stern of the vessel with sufficient rapidity to impart its proper pressure thereto, and in addition therefore to the ordinary resistances, the vessel has under such circumstances to encounter the hydrostatic pressure due to the deficient gravitation of the water against the stern. At high speeds it is consequently indispensable to make the stern very fine, else the vessel in passing through the water may leave a vacant space behind her, and the resistance will be enormously increased thereby. Each different speed, indeed, has a corresponding form of vessel, which will make the resistance a minimum. A vessel with any given amount of power, and with any given displacement, may be sharpened so much that an additional sharpening would increase the resistance, by increasing the friction of the bottom in a greater ratio than the bow and stern resistances were diminished. And when, by adopting such an amount of sharpness as gives the best result the total resistance is brought to a minimum for one particular amount of power, it will be found that a further sharpening is necessary to make the resistance a minimum for an increased amount of power. In practice cases have occurred where a vessel has been made too sharp, since with the same engine power placed in a blunter vessel a better speed was obtained. But with an increased power the sharper vessel would have afforded the best result.

The disadvantage of a deficient sharpness of the stern is materially aggravated if the vessel be set to ply in shallow water; for in such circumstances the friction of the water

upon the ground retards its entrance into the vacant space caused by the motion of the vessel through the water. Practically, therefore, the existence of shallow water is tantamount to an increased fullness of the stern. In other words, if two vessels of the same speed be taken, and one of them be set to ply upon shallow water, then the velocity will be so much reduced, from the difficulty of the water flowing in at the stern, as will be equivalent to the retardation caused in the other vessel by increasing the fullness of the stern. Whatever sharpness of the stern, therefore, it may be found advisable to give to ordinary vessels moving with a given speed in deep water, must be very much increased in the case of vessels intended to move with the same speed in shallow water. In all cases it is found that vessels plying in shallow water attain the best speed when trimmed very much by the head. The stern is thus partially raised out of the water, and made virtually finer than before; and vessels intended to ply upon shallow lakes or rivers should not merely be made very sharp at the stern, but the greatest immersion should be near the bow, from whence the keel should rise gradually upward towards the stern until it comes out of the water altogether. The higher the speed that is intended to be maintained the more imperative becomes the condition of giving extreme sharpness to the stern; and by no other known method of construction is it possible to navigate shallow waters at a considerable rate of speed.

CONFIGURATION AND PROPORTIONS OF THE SCREW PROPELLER.

The screw propeller, as now commonly applied to the propulsion of vessels, consists of two or three helical or twisted blades set upon a shaft or axis, revolving beneath the water at the stern. The shaft where it protrudes through the stern of the vessel is surrounded by a stuffing box, containing hemp packing, whereby the entrance of the water into the vessel is prevented, and the extremity of the shaft in the rear of the screw is supported in a socket or bearing attached to the rudder post. This post rests upon the keel, and from it the rudder is suspended. The screw revolves in that thin part of the stern of the ship which is called the deadwood, in which a hole of suitable dimensions is cut for its reception; and the thrust or forward pressure caused by the action of the screw upon the water is transmitted to some point within the vessel, which can be amply lubricated. The most perfect lubrication of this point is indispensable to counteract the friction caused by the combined thrust and rotation of the shaft, and cases have occurred in practice in which the end of the shaft became white hot even with a stream of water playing upon it, and actually welded itself to the steel plate against which it pressed. It is the thrust of the shaft which is operative in propelling the vessel, and the amount of this thrust can be measured by means of a dynamometer applied to the end of the shaft within the vessel.

The diameter of the screw is the diameter of the circle described by the arms; and the length of the screw is the length which the arms occupy upon the revolving shaft. If a

string be wound spirally upon a cylinder it will form a screw of one thread. If two strings be wound upon a cylinder with equal spaces between them they will form a screw of two threads. Three strings similarly wound will form a screw of three threads, and so of any other number. If instead of strings flat blades be wound edgeways round the cylinder, and if each blade has one of its edges attached to the cylinder by welding, soldering, or otherwise, then if a slice be cut off the end of the cylinder there will be only one piece of blade attached to that slice if the screw be of one thread, two pieces of blade if the screw be of two threads, three pieces of blade if the screw be of three threads, and so of any number. The number of blades, therefore, of any screw determines the number of threads of which it is composed, and this indication equally holds however thin the slice cut off the end of the screw may be.

The pitch of a screw is the distance measured in the direction of the axis between any one thread and the same thread at the point where it completes its next convolution. Thus a spiral staircase is a single-threaded screw, and the pitch of such a screw is the vertical distance from any one step to the step immediately overhead. Ordinary screw propellers are not made nearly so long as what answers to a whole convolution, and in speaking of their pitch, therefore, it is necessary to imagine the screw to be continued through a whole convolution at the same angle of inclination with which it was begun. Of this whole convolution any given proportion may be employed as a propeller, and the length of a screw therefore cannot be determined from the pitch.

The form of screw most frequently employed in this country is a screw of two blades or threads. The pitch of the screw is usually made equal to its diameter, or a little more, and the length of the screw is usually made equal to one-sixth of the pitch. The thrusting surface of the screw is measured by the area of the circle described by the arms, which is termed the area of the screw's disc. The screw's disc should have about 1 square foot of area for every $2\frac{1}{2}$ or 3 square feet in the immersed transverse section of the vessel. Thus, a vessel with 226 square feet of immersed section should have a screw of such diameter, that the disc will have an area of about $75\frac{1}{2}$ square feet. This answers to a diameter of screw of 10 feet. The pitch of such a screw should be about 11 feet, and the length of the screw about 1 foot 10 inches. These proportions are those proper for screws with two blades, but they will also apply to screws with three blades. The more numerous the blades are, the smaller may be the diameter of the screw and the coarser the pitch; but screws of many blades are not well calculated for the attainment of high speeds.

POSITIVE AND NEGATIVE SLIP OF THE SCREW.

By slip, it will be recollected, is meant the difference between the actual advance of the propeller through the water and the advance which would be accomplished if there were no recession of the water produced by the pressure of the propelling surface. A screw of

10 feet pitch, if working in a stationary nut, would advance 10 feet for every revolution it performed; but, when such a screw acts in the water, it may only advance 9 feet for every revolution,—the water being, during the same time, pressed back 1 foot, from its inertia being inadequate to resist the moving force. In such a case the slip is said to be 1 foot in 10, or 10 per cent. With every kind of propeller which acts upon water, there must be a certain amount of slip; for any force, however small, will overcome the inertia of the water to a certain extent; but, by so proportioning the propelling apparatus that it will lay hold of a large quantity of water, the backward motion of the water will be small relatively with the forward motion of the vessel,—or, in other words, the slip will be reduced to an inconsiderable amount.

One of the most remarkable phenomena connected with the action of the screw is, that under some circumstances its apparent progress through the water is not only as great as that of the ship, but greater. In some of the early voyages of the "Archimedes," when the vessel was proceeding under the joint action of steam and sails, it was found that the progress made by the vessel through the water was greater than if the screw worked in a solid nut. It was from hence inferred that the ship must be overrunning the screw; yet that, it was also plain, could not be the case, as the engine was all the while well supplied with steam, and had the usual load upon it. The engine was, therefore, evidently driving *something*, and it was certain that the mere friction of the machinery and of the screw in the water could not consume all the power. There was also the usual thrust upon the screw shaft; so that the screw, although moving slower than a patent log would do, if put over the stern, was nevertheless propelling the vessel. Shortly afterwards, the vessel was fitted with a number of different screws by Mr. Brunel, and it was ascertained that with some of these screws the vessel went faster without the aid of sails, than if the screw had been working in a solid nut. In various other vessels the same action has since been observed; and if the pitch of the screw be made much less than the diameter of the screw, this action is very likely to follow. At first the phenomenon appeared so paradoxical as to be pronounced incredible; but it is now known to be mainly a question of relative velocities between the screw and a column of water which follows the ship, and that column and the water of the sea.

When a strong current of water runs through the arches of a bridge, the water may be observed to curl around those ends of the piers which stand lowest in the stream; and if a chip of wood be thrown into that spot, it will not be carried off by the stream, but will remain at rest, showing that the water is not in motion at that place. Now, if we suppose a screw to be placed in this stationary water, it will be obvious that *any* movement of rotation given to it will produce some thrust upon the screw shaft; whereas if the screw were placed in the stream, it would require to revolve faster than the stream runs, before any thrust upon the screw shaft could be produced. If, now, we suppose the pier to be a ship, the other circumstances we have specified will not be altered thereby; and it is conceivable that a screw acting in this dead water, might enable the vessel to stem the

current, even though the screw moved with a less velocity than that of the current itself. That the screw will exert some reacting force upon this dead water, even with *any* speed of rotation, is obvious enough; but whether with a speed inferior to that of the stream, it will produce a sufficient thrust to enable the vessel to stem the current, will depend very much upon the shape of the vessel and the dimensions of the screw employed. If the pitch be fine, and the number of revolutions answering to a given speed of vessel be great, there will be a tendency to pile up the water at the stern, owing to the adhesion of the water to the rapidly-revolving blades, and the consequent acquisition of a considerable centrifugal force by the water. Where this action occurs, the vessel will be forced forward, to some extent, by the hydrostatic pressure produced by the elevation of the water at the stern, and this pressure will aid the thrust of the screw. If, then, by such an arrangement, a vessel could be made to stem a current, she could obviously, under like conditions, be made to move through still water. All vessels carry a current in their wake, which answers to the dead water in the case of the bridge; and if the screw acts in this current, then the *apparent* slip will be positive or negative, just as the *real* slip or the velocity of the current may preponderate. In every case the screw must have some slip relatively with the water in which it acts, but if that water has itself a forward motion, the result cannot be the same as if the water were stationary, and it will be necessary to reckon the forward motion of the current as well as the forward motion of the ship. Thus, if the real slip of the screw be three miles an hour, and the following current runs at the rate of three miles an hour after the ship, then there will appear to be no slip, if the comparison be made with the open ocean on each side of the vessel; or there will appear to be a *negative* slip, as it is termed, of one mile an hour, if the following current runs at the rate of four miles an hour. The whole perplexity vanishes, if we consider that a current follows the ship at a rate which may be either greater or less than the slip of the screw. This current is confined to the water very close to the ship; so that a log, whether of the ordinary or the patent kind, will not take cognisance of it, if thrown over the stern. But if a patent log were to be set in the spot where the screw revolves, it would show the velocity with which the vessel leaves the current, and the real slip of the screw would then be ascertained. In all screw vessels I believe the slip to be greater than it is commonly reckoned, for in all of them there is a following current in which the screw works; and as, in some cases, this current makes the apparent slip to disappear altogether, so it will, I believe, in every case reduce the visible slip to a less amount than the real slip, and it is the real slip which it concerns us to determine. There is no benefit derived from the existence of a following current in screw vessels; for to produce the current requires a large expenditure of power; and in screws so proportioned as to produce a negative slip, a worse performance has been obtained than in cases in which screws producing an apparent slip of 10 or 12 per cent. have been employed.

CENTRIFUGAL ACTION OF THE SCREW.

In the ordinary form of screw with helical blades standing at right angles with the axis, there is some loss of power from the centrifugal velocity given to the water, even under the most favourable circumstances which can attend its operation. But when the speed of the vessel is arrested by head winds or otherwise, a large proportion of the engine power is thus uselessly dissipated. At no time is the water thrown back in a cylindrical column from such a screw; but the water has the figure of the frustum of a cone, with the smallest end against the screw, even when the vessel is proceeding with little slip. If, however, the course of the vessel through the water be resisted, so that the screw has less of a progressive motion in the water, the arms act like a centrifugal fan, and the central part of the screw becomes in all probability a hollow space in which there is no water at all. The result of this operation is, that the screw moves with nearly the same velocity as if there were no extra impediment; yet there is no increased thrust upon the screw shaft, and power is lost by slip to a very serious extent. These defects are more conspicuous in vessels of shallow draft, and using screws of small diameter, than in deep vessels with large screws; and in cases where the screw is above the water, when the vessel is stationary, it becomes covered so soon as the vessel gets under weigh, owing to the volume of water thrown upward by its centrifugal action. It is found, also, that in small and shallow screw vessels, the engines, if set on at their full power when the vessel starts, instead of moving slowly at first, until the inertia of the vessel is overcome, as in the case of paddle vessels, actually *run away*, if permitted, and throw up a cascade of water at the stern. Such a result, if it only happened when the vessel was being started, would not be of much consequence; but it also occurs, to a greater or less degree, when the vessel is resisted by a head wind or sea; and this peculiarity of the screw renders it much less eligible than the paddle for propelling vessels head to wind. To some extent, this fault may be corrected by bending back the arms of the screw towards the stern, in the manner suggested by the Earl of Dundonald and by Hodgson, whose plans have been already described. But this will not be sufficient of itself to cure the defect, and the proper remedy appears to lie in sinking the screw deeper in the water. I consider that in no screw vessel has the screw yet been sunk sufficiently deep in the water. If the screw be but little immerged, it follows that the water is thrown backwards or outwards faster than the particles of water can descend by gravity from the surface of the fluid to fill the vacuity up. The efficient diameter of the screw is consequently greatly diminished, and a serious loss of power by slip is the necessary result. It is obvious that the velocity with which the water will rush into any empty space caused by the centrifugal or repellent action of the screw, depends upon the head of water above that empty space; or, in other words, upon the amount of the screw's immersion: and to prevent a vacant space from being formed, therefore, at the stern, the screw must be sunk in the water as deeply as possible. A deep

screw is better than a large screw, as it presents less surface for friction, and will be equally efficient in preventing slip.

It will be seen from this recapitulation, that the centrifugal action of the screw operates detrimentally in two ways: first, in occasioning a dispersion of the water in a radial direction, whereby power is consumed without any compensating advantage; and, second, in so reducing the efficient diameter of the screw, that the necessary reaction cannot be obtained unless the screw moves with a very great velocity relatively with the velocity of the vessel. A wasteful amount of slip is thus produced, and the high velocity of the screw increases its centrifugal action and adds to the loss sustained from that cause. Under such conditions I believe the effective part of the screw's disc to be reduced to a sort of half moon occupying the inferior portion of the circle. At the lower part of the disc the hydrostatic pressure compels the water to enter the circle described by the arms; but, in the other portions of the disc, I believe the water to be, to a considerable extent, shut out, or to be driven *outwards* instead of *backwards*, as ought to be the case. To recover some portion of the power thus dissipated, it has been proposed to surround the screw with a species of shrouding, which should receive an impulse from the moving water in the manner of a turbine; and the power thus recovered was to be rendered available in aiding the screw's rotation. But such an apparatus would be too complicated, and would cause too much friction to be usefully available in practice. It has also been proposed to enclose the screw in a tube; but screws working in this manner have been found to give less favourable results than screws working in open water. In Ericsson's propeller a hoop encircles the propelling blades, which will prevent the radial dispersion of the water to some extent. Nevertheless, this expedient does not adequately meet the evil; but its efficacy would probably be somewhat increased if the hoop, instead of being made to encircle the blades, were set a little astern of them, so that it would more effectually encounter the conical column of water caused by the combined operation of the slip and the centrifugal force. In common screws some benefit would probably be derived from bending or curving the blades sideways to a certain extent, so that the water, in flowing outwards, would impinge upon the curve, and aid the revolution of the screw. But the most effectual expedient of all is to sink the screw more deeply in the water; for, by this procedure, the centrifugal action and the inability of the water to obtain access to the heart of the screw will be simultaneously remedied. The deeper the screw is sunk in the water, the higher becomes the column which the centrifugal action must support, and an increased impediment to the radial dispersion of the water is thereby afforded. At the same time, the hydrostatic pressure of a high column compels the water to enter instantly into any vacuity caused by the action of the screw, or rather prevents such a vacuity being formed at all: and the screw will thus always have solid water to act upon. A vessel, of which the screw is sunk deeply in the water, will be able to contend with head winds as effectually as a paddle vessel; for the speed of the engines will be in all cases proportional to the speed of the ship, and the amount of slip will be nearly uniform whether the winds are favourable or adverse. No doubt, even with a deep

screw there will be some centrifugal action, caused partly by the impulse of the propelling blades and partly by the friction, which will cause some water to adhere to them, and acquire thereby a centrifugal motion. But when the slip is rendered uniform by the use of a deep screw, any centrifugal action which remains can for the most part be counteracted by giving a suitable form to the screw itself. With a uniform amount of slip there will be a uniform amount of centrifugal motion; and a uniform amount of centrifugal motion may be counteracted by imparting to the water such an amount of centripetal motion as will balance it precisely. This may be done by slightly bending backwards the arms of the screw, so that the centre of the arms shall be somewhat in advance of their extremities. Such a screw gives to the particles of water an impulse which would cause them to converge at a point if no counteracting force were applied; but, as they simultaneously receive a centrifugal impulse, they will follow a course intermediate between a convergent and a divergent one, — or, in other words, they will be projected backwards from the screw in a cylindrical column of the same diameter as the screw itself.

CHAPTER IV.

COMPARATIVE EFFICIENCY OF THE SCREW AND PADDLE AS A PROPELLER.

THE comparative efficiency of the screw and paddle as a propeller can only be ascertained by finding the velocity given by either instrument to a vessel of a given form, when using the same amount of engine power. Approximations to such a determination were made in the early career of screw propulsion, by comparing the speed of the screw vessel "Archimedes" with the speeds of various paddle vessels of about the same power and size. But more conclusive experiments have been subsequently made upon the sister vessels "Alecto" and "Rattler," and the sister vessels "Basilisk" and "Niger;" the "Alecto" and "Basilisk" being paddle vessels, and the "Rattler" and "Niger" screw vessels. These vessels were built specially to illustrate this particular question, and the results which the experiments upon them have afforded constitute the best guide that we yet possess in this branch of the subject.

"ARCHIMEDES" AND "WIDGEON."

In 1840 various experiments were made to determine the speed of the "Archimedes" as compared with that of the mail packets "Ariel," "Swallow," "Beaver," and "Widgeon," plying between Dover and Calais. The main dimensions of these several vessels were as follows: —

	Length.	Breadth.	Tonnage.	Power.	Area of Midship Section.	Speed in Statute Miles.
	Feet.	Feet.	Tons.	Horses.	Sq. Feet.	
Ariel - - -	108	17·3	152	60	95	10·4
Swallow - -	107·6	14·8	133	70	84	10·4
Beaver - -	102·2	16	128	62	84	11·2
Widgeon - -	108	17·10	162	90	95	10·3
Archimedes - -	106	21·10	237	80	143	

The first trial was made between the "Archimedes" and the "Ariel," both vessels using at the time sail and steam. The "Archimedes" beat the "Ariel" by 6 minutes between Dover and Calais, and on the return voyage, both vessels still using sail and steam, the "Archimedes" again beat by 5 minutes. The speed maintained was $9\frac{3}{4}$ knots. The next trial of the "Archimedes" was with the "Beaver," between Dover and Ostend. Here the speed maintained on the outward voyage was $9\frac{1}{2}$ knots, and on the homeward voyage $9\frac{1}{4}$ knots.

Outwards the "Archimedes" beat the "Beaver" by 4 minutes, and homeward the "Beaver" beat the "Archimedes" by 9 minutes. The next vessel against which the "Archimedes" was tried was the "Swallow," and under steam alone without any sails being set, the speed of the "Archimedes" was found to be somewhat greater than that of the "Swallow." The next vessel against which the "Archimedes" was tried was the "Widgeon." On a distance of 19 miles, with a light following wind, but no sail set, the "Widgeon" beat the "Archimedes" by 6 minutes; the speed of the "Archimedes" being $8\frac{1}{2}$ knots. In returning with a moderate head wind the "Widgeon" beat the "Archimedes" by 10 minutes; the speed of the "Archimedes" being then from $7\frac{1}{2}$ to 8 knots. In a subsequent trial with no wind and the sea quite smooth, the "Widgeon" beat the "Archimedes," $3\frac{1}{2}$ minutes on 19 miles. In a subsequent trial with a fresh breeze, and both vessels carrying sail, the "Archimedes" beat the "Widgeon" by 9 minutes on 19 miles. The "Archimedes" on one of these occasions performed the distance from Dover to Calais in 1 hour $53\frac{1}{2}$ minutes, being the swiftest passage which had then been performed. Upon the whole, the result of these trials showed that in head winds or calms the paddle vessel had an advantage; but in beam or other winds where sail could be set, the screw vessel had an advantage. The screw vessel, however, spread the most canvass, but she had also the largest midship section and the least proportionate power.

"RATTLER" AND "ALECTO."

The experiments with the "Rattler" and "Alecto" give more precise results than those afforded by the foregoing. The vessels were more exactly alike than in any previous instance, and the power exerted by the engines of both vessels was ascertained by the indicator. The thrust also upon the screw shaft was ascertained by the dynamometer, an instrument consisting of a combination of levers, like a weighing machine for carts, in which a small weight balances a heavy pressure. The following are the principal dimensions of the two vessels:—

	Length.	Breadth.	Tonnage.	Power.	Area of Midship Section at 11 ft. $5\frac{1}{2}$ in. Draft.
	Ft. in.	Ft. in.	Tons.	Horse.	
Rattler - -	176 6	32 $8\frac{1}{2}$	888	200	281·8
Alecto - -		32 $8\frac{1}{2}$	800	200	281·8

The only difference in the form of the vessels was, that the "Rattler" was lengthened out about 15 feet at the stern, to facilitate the introduction of the screw. The draft of water of the "Rattler" at the time of trial was forward, 11 feet 9 inches, and aft 12 feet 11 inches, making the mean draft 12 feet 4 inches. The draft of water of the "Alecto" at the time of trial was forward, 12 feet, aft 12 feet 7 inches, making the mean draft 12 feet $3\frac{1}{2}$ inches.

First Trial.—This trial was made under steam only. The weather was calm, and the water smooth. At 54 minutes past 5 in the morning both vessels left the Nore, and at 30½ minutes past 2 the "Rattler" stopped her engines in Yarmouth Roads, where in 20½ minutes afterwards she was joined by the "Alecto." The mean speed achieved by the "Rattler" during this trial was 9·2 knots per hour; the mean speed of the "Alecto" was 8·8 knots per hour. The slip of the screw was 10·2 per cent. The actual power exerted by the engines as shown by the indicator was, in the case of the "Rattler," 334·6 horses, and in the case of the "Alecto," 281·2 horses, being a difference of 53·6 horses in favour of the "Rattler." The forward thrust upon the screw shaft was 3 tons 17 cwt. 3 qrs. 14 lbs. The horse power of the shaft obtained by multiplying the thrust in pounds by the space passed through by the vessel in feet per minute, and dividing by 33,000, was 247·8 horses power. This makes the ratio of the shaft to the engine power as 1 to 1·3.

Second Trial.—This trial was made under the conjoint action of sails and steam, with a moderate breeze astern and smooth water. At 32½ minutes past 3 P. M. both vessels started abreast from Yarmouth Roads, steering to the North. At 21 minutes past 6 P. M. the "Rattler" stopped her engines and rounded to, and at 34½ minutes past 6 the "Alecto" rejoined her. The distance run was 34 miles, in which distance the time gained by the "Rattler" was 13½ minutes. The mean speed of the "Rattler" during the trial was 11·9 knots per hour. The mean speed of the "Alecto" during the trial was 11·2 knots per hour.

Third Trial.—This trial was made under steam alone against a strong head wind and sea. At 22½ minutes past 9 A. M. the two vessels were abreast, steering northward at full speed. At 10 the "Rattler's" steam having been accidentally permitted to become deficient in pressure, the "Alecto," which had fallen astern, came up alongside. At 44 minutes past 10 the "Alecto" had again fallen astern about a mile. The course was then changed so as to bring the wind and sea upon the larboard bow. At 17½ minutes past 5 P. M. the "Rattler" stopped her engines and anchored, and at 56½ minutes past 5 the "Alecto" came up. The distance run was 60 miles, and the time gained by the "Rattler" in that distance was 39 minutes. The mean speed of the "Rattler" during this trial was 7·5 knots per hour; the mean speed of the "Alecto" was 7 knots per hour. The speed, however, varied considerably during the run. At its commencement, when the wind was right ahead, and blowing very strong, the speed of the "Rattler" was only 5·5 knots per hour; whereas, towards its termination, when the wind and sea had moderated, and had been brought by the change of course more upon the larboard bow, the speed increased to 8·8 knots per hour. At the commencement of the run, the actual power exerted by the engines was, in the case of the "Rattler," 364 horses, and in the case of the "Alecto," 250, being an excess of power exerted by the "Rattler" of 114 horses. The mean slip of the screw was, during the same period, 42·2 per cent. The thrust of the screw shaft during this time varied considerably, owing to the pitching of the ship. The minimum thrust was 2 tons 5 cwt. 2 qrs.; the maximum thrust, 5 tons 13 cwt. 3 qrs., and the mean thrust 4 tons 4 cwt.

2 qrs. 18 lbs. The horse power of the shaft, with a speed of 5·5 knots, was 160·2 horses; and the ratio of the shaft to the indicator power was as 1 to 2·2. When the speed rose to 8·8 knots, the other particulars of the performance became as follows: — Actual power exerted by the engines, 388 horses; minimum thrust of the screw shaft, 1 ton 16 cwt. 3 qrs.; maximum thrust of the screw shaft, 5 tons 5 cwt.; mean thrust of the screw shaft, 4 tons 2 cwt. 2 qrs. 23 lbs.; horse power of shaft, 249 horses; ratio of shaft to engine power, 1 to 1·5; mean slip of the screw, 19·1 per cent.

As a sequel to the foregoing trial, the vessels made a short run under steam alone before the wind, but without sail, and with the spars struck. The wind had by this time moderated, and the water had become smooth. The speed realised by the "Rattler" was 10 knots per hour. The slip of the screw was 11·2 per cent. The actual power exerted by the engines of the "Rattler" was 368·8 horses; the actual power exerted by the engines of the "Alecto" was 291·7 horses. The thrust of the shaft was equal to a weight of 4 tons 4 cwt. 1 qr. 1 lb. The horse power of the shaft was 290·2 horses, and the ratio of the shaft to engine power as 1 to 1·2. The results of this trial are remarkable for the near equality of the shaft and engine power. The more nearly alike those powers are, the more efficient is the operation of the screw.

Fourth Trial.—This trial was made under sail only with the wind astern. To enable it to be accomplished, the "Alecto" had to unship her paddle boards; and in the "Rattler" the screw was set vertical, so as to bring it in a line with the stern post. At 42 minutes past 4 P. M. the vessels were abreast, steering northward under all plain sail, and topmast and lower studding sails. At half-past 6, the "Alecto" being astern 2503 yards, as determined by angulation, the "Rattler" shortened sail, and the trial terminated. The speed of the "Rattler" varied from 5 to 6½ knots. The breeze was moderate, and the water smooth. At one period of this trial it was found that the screw had been accidentally left in a horizontal position; but the difference of speed gained by restoring it to the vertical position was not considerable.

Fifth Trial.—This trial was also made under sail only, on a wind. At half past 9 A. M. both vessels started on the port tack under all plain sail. The speed was about 3·2 knots an hour. At noon, the wind having shifted, both vessels tacked. At half past 2 the "Rattler" ranged up to windward of the "Alecto," and a trial of 5 hours was closed with a slight advantage on the part of the "Rattler." The wind was moderate, and the water smooth.

Sixth Trial.—This trial was also made under plain sail only, with the wind a-beam. At 33 minutes past 2, both vessels started under all plain sail, with smooth water and a freshening breeze. At half-past 3 the "Rattler," then going 10 knots, took in her top-gallant sail, and reset it at half-past 4. At 52 minutes past 5 the "Rattler" shortened sail, and was joined by the "Alecto" at 32½ minutes past 6. The mean speed of the "Rattler" was 8 knots an hour; and, in a trial of 4 hours, she gained in time about 38 minutes.

Seventh Trial.—In this trial the "Rattler," under steam only, was set to tow the

"Alecto," from which vessel the paddle-boards had first been removed. The water was perfectly smooth, and there was no wind. The speed of the "Rattler" with the "Alecto" in tow was found by the patent log to be about 7 knots. The actual power exerted by the engines of the "Rattler" during this trial was 351·6 horses. The mean thrust upon the screw-shaft was 4 tons 11 cwt. 3 qrs. 2 lbs. The horse power of the shaft was 222·6 horses; the ratio of shaft to engine power was 1 to 1·5, and the slip of screw was 33·6 per cent.

Eighth Trial.—In this trial the "Alecto," under steam only, was set to tow the "Rattler," in which vessel the screw was set vertical, so as to come in the line of the stern-post. The speed of the "Alecto" with the "Rattler" in tow was ascertained by the patent log to be somewhat under 6 knots. The "Rattler," therefore, had an advantage of speed when towing, of somewhat more than a knot an hour. But her engines exerted considerably more power than those of the "Alecto," and consequently required more coals to supply them with steam.

Ninth Trial.—In this trial the ships were tied stern to stern, and the engines of both were then set on so as to determine which exerted the largest amount of tractive force. As it was supposed by some persons that the vessel whose engines were first started would gain an advantage which she would afterwards retain, the "Alecto" was permitted to start her engines first, and to tow the "Rattler" astern at the rate of two knots an hour, before the "Rattler's" engines were set on. In 5 minutes after the engines of the "Rattler" had been started, her stern way was arrested, and the two vessels were standing still; the "Rattler" then gradually moved ahead, and dragged the "Alecto" astern against the whole force of her engines, at a speed of 2·8 knots an hour.

The power actually exerted by the engines of the "Rattler" during this trial was 299·8 horses. The power actually exerted by the engines of the "Alecto" was 140·7 horses; being less than half the preceding. The mean thrust of the screw shaft was equal to a weight of 4 tons 13 cwt. 3 qrs. 5 lbs. The horse power of the shaft was 90·41 horses; the ratio of shaft to engine power 1 to 3·3, and the slip of the screw 66 per cent.

These towing experiments exhibit, in a conclusive manner, one of the main defects of the screw: namely, its approach to a uniform speed under all variations of resistance; for, as the vessel cannot proceed with nearly the same velocity when the resistance opposed to her progress is greatly increased, there must be a large amount of slips, under such circumstances, if the propeller maintains a nearly uniform speed, and power and coals will be thus uselessly consumed. Now, the number of strokes made by the engines of the "Rattler" and "Alecto" respectively, in the several trials of which the results have been already recapitulated, were, in the first trial, "Rattler" $23\frac{3}{4}$, "Alecto" $19\frac{3}{4}$; in the third trial, "Rattler" $22\frac{1}{2}$, "Alecto" 18; in the seventh trial, "Rattler $24\frac{1}{2}$, and in the ninth trial, "Rattler" 19, "Alecto" $8\frac{3}{4}$. Thus such an increase of the resistance as sufficed to reduce the speed of the engines of the "Alecto" from $19\frac{3}{4}$ strokes to $8\frac{3}{4}$, or more than half, reduced the speed of the engines of the "Rattler" only from $23\frac{3}{4}$ to 19, or not so much as one-fourth. In the screw, therefore, when the vessel is resisted by any opposing force, the loss by slip is much greater than in the paddle; and in this particular experiment the screw

lost more power by slip than was consumed in the paddle vessel altogether. Thus, if from the indicator power of 299·8 horses we subtract the shaft power of 90·41 horses, we have 209·39 horses as the amount of power consumed by slip and friction in the "Rattler." But the total power expended in the "Alecto" was only 140·7 horses altogether.

After the experiments upon towing had been concluded, two experiments were made to ascertain the results obtainable in the "Rattler" with a diminished power. The weather was calm and the water smooth, and the speed obtained when the engines were set to work on the lowest grade of expansion, was 8 knots an hour. The number of revolutions made by the engines in the minute was 21; the power actually exerted by the engines was 204·7 horses. The thrust upon the shaft was equal to a weight of 2 tons 15 cwt. 1 qr. 25 lbs. The horse power of the shaft was 152·6 horses, and the ratio of the shaft to the engine power was as 1 to 1·3. The slip of the screw was 12·2 per cent.

The steam was next further shut off until the speed was reduced to 6 knots. The number of strokes of the engine in the minute was then 17; actual horse power 126·7; thrust upon the shaft 2 tons 2 cwt. 3 qrs. 14 lbs.; horse power of shaft 88·4 horses; ratio of shaft to engine power 1 to 1·4; slip of the screw 18·7 per cent. These results are somewhat anomalous, as they show that the slip is not diminished, nor the proportion of the shaft-power increased by making the engine-power small relatively with the diameter of the screw.

Tenth Trial.—This trial was made under steam only, with the wind four points on the larboard bow. The distance run was 72 miles. The time occupied by the "Rattler" in performing this distance was 4 hours, 31½ minutes; and by the "Alecto" 5 hours, 22¼ minutes. The average speed of the "Rattler" during the trial was 9·07 knots, and the average speed of the "Alecto" was 8·19 knots. The number of strokes per minute made by the engines of the "Rattler" was 24¼, and by the engines of the "Alecto" 18. The power actually exerted by the engines of the "Rattler" was 324 horses, and by the engines of the "Alecto" 245·8 horses. The thrust upon the screw shaft was equal to a weight of 3 tons 10 cwts. 1 qr. 3 lbs. The horse power of the screw shaft was 219·2 horses. The proportion of shaft to engine power was as 1 to 1·4; and the slip of the screw was 11·1 per cent.

Eleventh Trial.—This trial, which lasted for 7 hours, was made against a strong head wind, and heavy head sea. The speed of the "Rattler" by patent log was 4·2 knots, and at the conclusion of the trial the "Alecto" had the advantage by about half a mile. Owing to an accidental injury to the indicator, the power exerted by the engines of the "Rattler" in this trial could not be ascertained. It is certain, however, that it must have been large, and that the loss by slips must have been great, since, although the speed of the vessel was reduced to about 4 knots, the number of strokes made by the engines in the minute was 22, whereas in the "Alecto" the number of strokes in the minute was only 12. During a great part of the trial the "Rattler" was deficient in steam, owing to the necessity of closing the openings into the engine room to keep out the sea, and by this partial exclusion of the air the draft of the furnaces was impaired. The "Alecto," however, though placed in similar circumstances, had large quantities of steam blowing off; a result which furnishes

additional proof of the wasteful expenditure of power or steam by screw vessels in head winds; for the "Alecto" would have been as deficient in steam as the "Rattler," if the engines had been running at the same high velocity. The minimum thrust upon the screw shaft in this experiment, when the vessel was pitching, was 2 tons 7 cwt. 1 qr.; the maximum thrust, 5 tons 3 cwt. 1 qr.; mean thrust, 4 tons 7 cwt. 0 qr. 16 lbs. The horse power of the shaft was 125·9 horses, and the slip of the screw was 56 per cent.

Twelfth Trial. — This trial was made under steam only, on the return of the vessels from Yarmouth roads to Woolwich, but owing to an accident which occurred to one of the boilers of the "Alecto," and to the interruptions occasioned by encountering vessels entering the Thames, the result of it cannot be stated with any precision. The advantage, however, lay with the "Rattler." With a strong breeze on the larboard bow, but aided by the flood tide, the "Rattler" passed the measured mile in the river at the rate of 11·88 knots per hour.

In the whole of these trials it will be remarked, the "Rattler" exerted considerably more power than the "Alecto," and the disparity is greatest when the vessels were employed in towing, or were set to encounter head winds. Under steam alone, without wind, or under the conjoint influence of steam and sail, the two modes of propulsion appear to be equally efficient with the same expenditure of power; but in the case of towing, or in head winds, these experiments show that the paddle is by much the most efficient propeller with the same expenditure of power. Two important points, however, are left by these experiments undetermined. The first is the relative efficiency of screw and paddle vessels with deep, light, and medium immersions; and the second is, the comparative efficiency of a given screw in a given vessel when the screw is sunk to different depths in the water. The first of these questions has since received satisfactory elucidation from the experiments with the "Niger" and "Basilisk;" but I am not aware of any experiments which have been made to determine how much a deep screw is better than a shallow one, though this is one of the most important questions connected with the subject.

"NIGER" AND "BASILISK."

The "Niger" is a screw vessel of 1072 tons. Her length between perpendiculars is 194 feet; breadth 34 feet 8 inches; mean draught of water at constructor's deep immersion, 15 feet 6 inches; area of midship section, 426·4 square feet; diameter of screw, 12 feet 6 inches; pitch of screw, 17 feet $4\frac{1}{2}$ inches; length of screw, 2 feet 6 inches; and nominal power, 400 horses. The "Basilisk" is a paddle vessel, built off the same lines as the "Niger," and of the same nominal power; but there are about 15 square feet less of immersed sectional area of hull in the "Basilisk" than in the "Niger." The diameter of the "Basilisk's" paddle wheel is 22 feet 1 inch; length of float, 9 feet 6 inches; breadth of float, 2 feet 3 inches; and the immersion of the wheel is 4 feet 8 inches when the vessel is

drawing 15½ feet of water. During the trials with the "Niger," however, the floats were reefed or drawn towards the centre of the wheel, until its effective diameter was reduced to 21 feet.

With these vessels a number of experiments were made in 1849 to determine the comparative efficiency of the screw and the paddle as a propeller. In these experiments the power actually exerted by the engines of both vessels was ascertained by means of the indicator, as in the case of the trials between the "Rattler" and "Alecto." The progress of each vessel relatively with the other was also observed by proper angulation; and the results were compared and mutually agreed upon by the commanders of the respective vessels before they were finally accepted. Three distinct series of experiments were performed altogether. The first series was performed with the vessels under steam alone; the second was performed with the vessels under steam and sail together; and the third was performed with the vessels under sail alone. Each series was subdivided into three subsidiary classes, of which the first comprehended those experiments made when the vessels were at a deep immersion; the second when they were at an intermediate immersion; and the third when they were at a light immersion. The more important results as forwarded to the Admiralty are exhibited in the following table: —

SUMMARY of the Results of Experiments made in H. M. Ships "NIGER" and "BASILISK," between May and August, 1849, to test the relative Propelling Powers of the Screw and Paddle Wheel.

Nature and Circumstances of the Trials.					Order of Trials.	Date of Trials.	Duration of Trials. Hours.	Superiority of Speed. As shown during the Trial.			As determined in proportion to the Power employed		
								In favour of	In Knots.	Per Cent.	In favour of	In Knots.	Per Cent.
1st SERIES under Steam only.	Deep Immersion.	Full power.	Smooth water.	Highest speed	1	May 31.	8	Basilisk	0·168	1·8	Niger	0·45	·5
		,,	,,	Faster ship keeping pace with slower	2	June 1.	8	Equal	0·3	,,	Equal	,,	,,
		,,	,,	Highest speed	7	June 18.	8	Niger	0·162	1·8	Niger	0·279	3·1
		,,	,,	Highest speed repeated	14	June 22.	6	Basilisk	0·13	1·6	Niger	0·013	·2
		,,	,,	Proceeding to Plymouth	17	June 24-5.	21	Basilisk	1·2	12·4	Niger	0·2	·2
		,,	,,	Towing each other alternately one hour	6	June 9	2	Basilisk	2·85	38·	Basilisk	2·256	·29
		,,	,,	Towing each other stern to stern	10	June 20.	1	Not determd.		,,	,,	,,	,,
		,,	,,	Towing each other stern to stern (repeated)	11	June 20.	1	Niger	1·466	,,	,,	,,	,,
		,,	,,	Towing each other alternately 1 hour (repeated)	12	June 20.	2	Basilisk	0·37	6·1	Basilisk	0·44	7·1
		Half furnaces.	,,	Highest speed	3	June 2.	8	Basilisk	1·363	20 7	Niger	0·098	1·2
		,,	,,	Faster ship keeping pace with slower	4	June 6.	8	Equal	,,	,,	Basilisk	0·041	·6
	Intermediate Immersion.	Full power.	,,	Speed at measured mile in Stokes Bay	,,	May 15.	,,	Basilisk	0·323	3·	,,	,,	,,
		,,	,,	Highest speed	18	July 9.	6	Basilisk	0·313	3·4	Basilisk	0·192	2·1
		,,	,,	Faster ship keeping pace with slower	19	July 9.	6	Equal	,,	,,	Basilisk	0·235	2·7
		,,	,,	Highest speed	31	August 1.	5	Basilisk	0·284	3·3	Basilisk	0·039	1·4
		,,	,,	Faster ship keeping pace with slower	32	August 1.	5	Equal	,,	,,	Niger	0·05	·5
		Reduced speed	,,	Equal speed	33	August 2.	5	Equal	,,	,,	Basilisk	0·356	4·6
	Light Immersion.	Full power.	,,	Highest speed (ships very light)	24	July 22.	5	Basilisk	0.659	7·5	Basilisk	0·412	4·7
		,,	,,	Faster ship keeping pace with slower	25	July 22.	5	Equal	,,	,,	Basilisk	0·095	1·5
		Half furnaces.	,,	Highest speed	26	July 23.	5	Basilisk	1·774	20·2	Basilisk	0·032	4·
		,,	,,	Faster ship keeping pace with slower	27	July 23.	5	Equal	,,	,,	Basilisk	0·31	8·8
		Reduced power.	,,	Equal speed proceeding to Plymouth	30	July 26.	5	Equal	,,	,,	Basilisk	0·18	2·8
2d SERIES under Steam and Sail.	Deep Immersion.	Full power.	,,	Highest speed, fore and aft sails only on a wind	8	June 19.	3	Not determined.					
		,,	,,	Ditto, all plain sail on a wind	9	June 19.	6	Niger gained to windward pr.h.			0·437	,,	
	Intermediate Immersion.	,,	,,	Ditto, all sail wind abeam	20	July 10.	6	Basilisk gained ahead per hour			0·309	3·1	
		,,	,,	Ditto, all sail wind abaft the beam	21	July 10.	6	Basilisk gained ahead per hour			0·52	5·2	
3rd SERIES under Sail only.	Deep Immersion.	,,	,,	All plain sail on a wind	5	June 7.	8	Niger gained to windward pr.h.			0·937		
		,,	,,	All sail, wind abeam	15	June 23.	3	Niger gained ahead per hour			1·42		
	Intermediate Immersion.	,,	,,	All sail, wind abaft the beam	16	June 23.	3	Niger gained ahead per hour			0·584		
		,,	,,	All plain sail on a wind	22	July 11.	6·25	Niger gained to windward pr.h.			0·567		
		,,	,,	All plain sail on a wind	24	July 12.	8	Niger gained to windward pr.h.			0·646		
	Light Immersion.	,,	,,	All plain sail on a wind.	28	July 24.	·5	Niger gained to windward pr.h.			0·74		
		,,	,,	All plain sail, wind abeam	29	July 25.	5	Niger gained ahead			1·219		

By a reference to this table the following facts will be made apparent:—when the vessels were tried under steam alone, with a deep immersion and at their highest speed, as was the case in the trials numbered 1., 7., 14., and 17., the "Basilisk" had in every case but one an advantage in point of speed varying from 1·6 to 12·4 per cent. But the "Basilisk" at the same time exerted the greatest amount of power; and if the speed be reduced to what it would have been if the same amount of power had been exerted in the two vessels, then it will be seen that the "Niger" had in every case an advantage varying from ·5 to 3·1 per cent. of the total speed. When the vessels, still under steam alone, were tried with a medium immersion at their highest speed, as was the case in the trials numbered 18. and 31., the "Basilisk" had an advantage in speed of 3·3 to 3·4 per cent. But the "Basilisk" during this time exerted more power than the "Niger;" and if, the speed of the "Basilisk," be reduced to that point which it would have reached if only the same power had been exerted, it will then be seen that the "Basilisk" had still an advantage of 1·4 to 2·1 per cent. over the "Niger." When the vessels, still under steam alone, were tried with a light immersion, and at their highest speed, as was the case in the trial numbered 24., the "Basilisk" had an advantage in speed of ·659 knots per hour, or 7·5 per cent. But the "Basilisk" during this time exerted more power than the "Niger;" and if the speed be reduced to that point which it would have reached if only the same power had been exerted, it will be seen that the "Basilisk" had still an advantage of 4·7 per cent. of the total speed over the "Niger." It appears, therefore, that in similar vessels employing the same amount of engine power, and impelled by steam alone at their highest attainable speed, the screw is the most advantageous propeller in the case of deep immersions, and the paddle in the case of light and medium immersions. The absolute speed of each vessel is not stated in the table; but the speed of each vessel under steam alone, as ascertained at the measured mile, was about 10 knots an hour, and the mean speed of the "Niger," during the seven trials of the highest speed at sea, was 8·475 knots. The mean progress of the screw of the "Niger" through the water, during the seven preceding trials, was at the rate of 11·205 knots per hour, so that the mean slip of the screw during these trials was at the rate of 2·73 knots per hour, or rather more than 24 per cent.

It will further be seen, by a reference to the table, that when the two vessels were tied stern to stern, and the engines were then set on, the "Niger" dragged the "Basilisk" backwards against the whole force of her engines at the rate of 1·466 knots per hour. But during this time the engines of the "Basilisk" were reduced in their speed 134 per cent., and in their power 103 per cent., and the screw exerted the most power by 188 horses. In another trial, in which the "Niger" dragged the "Basilisk" backwards at the rate of 1·1 knots per hour, the engines of the "Niger" were working with an actual power of 529·63 horses, and the engines of the "Basilisk" were, from their reduced speed, working with a power of only 341·5 horses. The engines of the "Niger" are direct action engines, or, in other words, are coupled immediately to the screw shaft without the intervention of gearing. When the vessels were tied stern to stern, and the "Niger" was towing the "Basilisk" at

the rate of 1·1 knots per hour, the engines of the "Niger" made 3150 revolutions in the hour, whereas the engines of the "Basilisk" made only 452 revolutions in the hour, being somewhat less than half their usual speed.

We have here a similar result to that exhibited by the ninth trial of the "Rattler" and "Alecto," but in a somewhat less aggravated form. There, the power consumed by the screw vessel was more than twice that consumed by the paddle vessel; but the screw vessel towed the paddle vessel at the rate of 2·8 knots an hour. Here, the screw vessel is found to consume a good deal less than twice the power consumed by the paddle vessel; but her preponderance of speed is only from 1 to 1½ knots per hour. It appears, therefore, by a comparison of these experiments, that the amount of preponderance of the screw vessel over the paddle vessel is proportional in a certain degree to the excess of engine power consumed by the screw vessel. Nevertheless, this additional power cannot give an increased thrust to the screw shaft, since whether in a screw vessel or a paddle vessel the velocity of rotation will always be such that the thrust will balance the pressure upon the pistons of the engine; and so long as the pressure upon the engine is uniform, so must the thrust be, whatever may be the velocity of revolution. Accordingly, it was found, by the experiments upon the "Rattler," that when the vessels were tied stern to stern, the thrust upon the screw shaft was 4 tons 13 cwt. 3 qrs. 5 lbs., being about the same as in previous trials, in which the vessel had only her own resistance to overcome; and as this thrust had only sufficed to give the "Rattler" a slight superiority over the "Alecto" when both vessels were pursuing an unfettered course through the water, how comes it that it was able to give a preponderance of nearly three knots an hour when the vessels were tied stern to stern? This is a question which, so far as I am aware, has not yet received any solution; but it appears quite clear to me that the superior tractive efficacy displayed by the screw vessel under such circumstances, is not the result of any increased pressure or thrust exerted by the propelling instrument, but is caused by the gravitation of the screw vessel down an inclined plane, formed by the surface of the water in which she floats. The centrifugal action of a screw, when set into revolution under water with little or no progressive motion, causes a bulging up of the water-surface over the screw to an extent proportional to the centrifugal force; and if such a wave be raised at the stern of a screw vessel, she will obviously slide down it by gravity with a force proportional to her own weight and to the height of the wave. Accordingly, it is found that when a paddle and screw vessel are set to drag one another, after having been tied together at the bow, the superiority of the screw vessel in tractive power is not maintained; and upon the whole, it appears tolerably certain that the screw vessel is forced forward mainly by the artificial wave raised against the stern. No doubt this wave being raised between the vessels must affect the paddle vessel also to a certain extent; but as this wave, in common with all others, will be much steeper at the vertex than at the base, and as the sterns, from their natural over-hang, cannot be brought close together, the stern of the screw vessel will be in the vertex of the wave, and the stern of the paddle vessel nearer its base. The screw

vessel, therefore, will have a steeper plane to slide down than the paddle vessel has to slide up, and will consequently preponderate. Nor can the stern of the paddle vessel be dragged into the vertex of the wave by its progressive motion astern; for the wave will necessarily travel with the screw vessel; being, in fact, continually produced by the action of the screw, and continually subsiding so soon as the water is released from the disturbance of the centrifugal force which the screw exerts.

Now, although in some particular exigencies it must be reckoned an advantage to be able with *any* expenditure of power to increase the tractive force of a vessel, yet the habitual use of an expensive power for such a purpose is obviously inadvisable; and since screw vessels of the ordinary construction, when set to tow against a heavy resistance, are very expensive in power, they are consequently, as at present constructed, but ill fitted for the performance of such a function. If the power consumed in the "Rattler" or the "Niger" when set to drag their sister paddle vessels astern against the force of their engines, had been consumed in a suitable vessel fitted with paddle-wheels, a much better result would have been obtained; and the result would have also been better if the same power had been consumed in giving motion to a larger screw, or a screw with a deeper immersion. The screw of the "Rattler," being only 10 feet in diameter and 15 inches long, may be more readily put into rapid rotation in still water than the screw of the "Niger," which is 12½ ft. in diameter, and 30 inches long. Accordingly, the centrifugal action was greater in the case of the "Rattler" than in the case of the "Niger." More power was consumed, and a greater effect was also produced, owing, no doubt, to a larger wave having been raised against the stern. But far less effect was produced than if the same power had been expended in a beneficial manner, by giving a slower motion to a propelling instrument which had such an increased hold of the water as was proportional to the increased resistance which had to be overcome.

It will further be seen, by a reference to the table, that in the trials numbered 6. and 12., in which the screw and paddle vessels were set to tow one another alternately, the paddle vessel attained the highest speed with the least power. Thus, in the trial number 12., the "Niger" towed the "Basilisk" at the rate of 5·63 knots per hour with a power of 593·9 actual horses, the engines making 3632 strokes in the hour; whereas the "Basilisk" towed the "Niger" at the rate of 6 knots per hour with an actual power of 572·3 horses, the engines making 827 strokes in the hour. The screw engine, therefore, exerted about 22 horses more power than the paddle engine; yet the screw vessel had the smallest speed. The paddle engine in this trial lost 28 per cent. of its speed of piston, but only 21 per cent. of its power; for, as the velocity of the piston diminished, the pressure of the steam slightly increased. The screw engine lost only 10 per cent. of speed of piston, and 10 per cent. of power, the pressure of the steam remaining without alteration.

Throughout these experiments it was found that the "Niger" consumed, on an average, one-third more fuel than the "Basilisk" to produce the same engine power; but this result was accidental merely to the imperfections of the engines or boilers of the screw vessel,

and had no connection whatever with the character of the propeller employed. In this respect, indeed, the issue would have been the same if the engines of the "Niger" had been set to drive paddle wheels, or to generate power for any purpose. Taking, however, the same amount of power as existing in each vessel,—and which it is certain can be produced in each case with the same quantity of fuel,—there still remains the balance of disadvantage against the screw, from the waste of power its use involves either in towing a vessel through the water, or in contending with head winds. So far as the action of the screw is concerned, the effect will be the same, whether the speed of the vessel be reduced from 10 knots to 6 by towing another vessel behind her, or by the obstruction occasioned by adverse winds; and since in towing, the screw, as applied in these vessels, is a wasteful instrument, so in all cases in which ships have habitually to encounter head winds, the screw, as usually applied, is certainly ineligible as a propeller.

In the second series of experiments, in which the vessels were propelled under the combined action of steam and sails, the "Basilisk" appears to have maintained an efficiency quite equal to that of the "Niger;" but the winds were too light at the time to warrant these results being reckoned as completely conclusive. In the third series of experiments, which were made under sail only, the "Niger" had an advantage in every instance. In the last of the trials, under sail only, the speed accomplished by the "Niger" was about 12 knots an hour.

I do not consider it necessary to enter into any enquiry respecting the comparative eligibility of the screw and paddle in any other respect than as regards their relative mechanical efficiency as propellers, since, in all other points in which a comparison could be made, the advantage manifestly lies with the screw. The screw, it is obvious, is a much less cumbrous instrument than the paddle, and interferes less with those nautical arrangements which are judged proper for a vessel that has to employ sail. At the same time, it does not appear, from the experiments which have been recited, that the superiority of a screw vessel under sail and steam combined, or under sail alone, is so great as to constitute any material advantage. Paddle vessels spreading the same area of sail will, unless they be of small dimensions, realise about the same amount of speed as screw vessels; and the superiority heretofore imputed to screw vessels in this respect is traceable to the circumstance that they have usually been furnished with a larger proportion of canvass. There does not appear, therefore, to be any reason for concluding that paddle vessels of considerable tonnage, fitted with auxiliary power, would be less efficient than screw vessels of the same tonnage fitted with auxiliary power; and the vessels employed by the General Steam Navigation Company for many years past have, in effect, been paddle vessels fitted with auxiliary power,—the engines being but of small dimensions relatively with the dimensions of the ships. In vessels, therefore, in which auxiliary power has to be introduced, it is not so much on the ground of superior efficiency that a preference is to be given to the screw, as on the ground of greater facility of application. Screw engines may be made to occupy a much less space in the vessel than paddle engines, and are also lighter and less expensive. In the case of

war vessels, the whole of the propelling machinery may be set below the water line, and will therefore be more out of the reach of shot, and the decks will be left free and unobstructed for the service of the guns. For vessels, therefore, with so small a proportion of power as to be inconsistent with the intention of encountering strong head winds, and for vessels also which are intended for purposes of warfare, the screw is unquestionably the best propeller; while for vessels with a large proportion of power, and which are required to steam against variable or adverse winds through voyages of no great length, but with the greatest regularity and economy, the paddle is as assuredly the best propeller. If the voyage be a long one, however, relatively with the size of the vessel, so that the supply of coals necessary for the voyage greatly affects the immersion, then it will happen that the paddles will be so deep in the water at the commencement of the voyage, or will have such an inadequate immersion at its termination, as to produce at those times a most defective performance. It therefore happens, that paddle vessels of large power, when starting upon a long voyage, will sometimes be outstripped in speed by screw vessels of a power greatly inferior; for the paddle-wheel acts in its worst manner when sunk very deep in the water, whereas the screw acts in its best.

All paddle vessels of the best class are now fitted with expansion apparatus, by means of which the engines can be wrought very expansively in calm weather or in fair winds, and with the full pressure of steam throughout the stroke in adverse winds. By working the engines expansively is meant stopping the entrance of the steam into the cylinders after a certain proportion of the stroke is completed, and leaving the residue of the stroke to be completed, not by the admission of new steam, but by the expansion of that steam already shut within the cylinders. Of course the power exerted by an engine during each stroke is thus diminished, but the consumption of steam is diminished in a greater proportion. For if the steam be shut off from the cylinder when half the stroke is performed, only half the steam will be required for each stroke, but more than half the power will be exerted, since the expanding steam communicates *some* power, and this power is obtained without any expense. It is consequently, under suitable conditions, an economical practice to work engines expansively, as it is termed; and in steam vessels of modern construction this is generally done when the engines have not to overcome any extra load. But when by the resistance presented by a head wind the speed of the vessel, and consequently of the engines, is diminished, a larger supply of steam is admitted to the engines at every stroke, by giving a suitable adjustment to a valve provided for regulating its supply; and the speed of the vessel is thus more effectually maintained than if the surplus steam accumulated in consequence of the diminished speed of the engines were suffered to go to waste. By this expedient, the force applied to urge the piston of a paddle engine is increased in the same proportion in which the speed of the engine is diminished; and if the forward thrust produced by the engine were to be measured by a dynamometer, it would be found to be considerably greater when the wind is foul than when the wind is fair. In a screw vessel, however, of the usual description, this action cannot occur to any considerable extent; for,

as the speed of the engines is nearly as great under adverse circumstances of wind and water as when those circumstances are favourable, there can be no accumulation of steam to employ in the manner described. If the engines of a screw vessel, therefore, are under favourable or indifferent circumstances worked expansively, they must continue to be so worked when the wind is adverse; as there will be no supply of steam available for working them in any other manner. If the screw had only the same proportionate slip as the paddle when encountering the augmented resistance due to a head wind, the engines of the screw vessel could, under such circumstances, be also worked with the full pressure of steam throughout the stroke; and the thrust of the screw shaft would thus be increased at the same time that less fuel was consumed.

DYNAMOMETER AND INDICATOR, DIAGRAMS OF THE "RATTLER."

In plates I. and II. are given the dynamometer and indicator diagrams taken from the "Rattler" in the several experiments of which the main incidents have been already described. The indicator diagrams of the "Alecto" are also given, so as to enable a comparison to be made of the efficiency of the engine power in the two vessels. It is the dynamometer diagrams, however, which will prove most instructive, and the specimens given are selections from the very large assortment of diagrams taken at the time. In some cases the dynamometer consists of a single long lever, the end of which is pressed by a spiral spring, and in other cases there is a combination of levers, by which the same purposes are subserved. The drum on which the paper is wound may be formed of wood, and the expedient by which it is put into revolution, is usually such that the speed of rotation may be increased or diminished in certain definite proportions. By this arrangement, if the fluctuations of pressure are rapid and frequent, the velocity of rotation of the drum may be increased, and the several lines inscribed upon the drum will thus be in less danger of being confounded together.

Diagrams A *and* B, *Plate I.* Diagram A was taken at 45 minutes past 9 A. M. on the 30th of March, 1845, at the first of the series of trials already referred to. The engines at the time were working with the second grade of expansion, and were making $23\frac{3}{4}$ revolutions in the minute; the speed of the vessel was 8·6 knots. The average pressure upon the spring, as exhibited by this diagram, is 40·24 lbs., and the average pressure shown by three similar diagrams is 39·20 lbs. The ratio of the pressure on the spring, to the pressure on the shaft, is 1 to 196. The diagram B, though apparently differing from the diagram A, is substantially the same. The difference in the appearance is caused by the motion of the drum being slower in the case of the diagram B, than in the case of the diagram A. The mean pressure exhibited by the diagram B is 44·12 lbs., and the average pressure of three similar diagrams is 42·55 lbs.; but another calculation gives 44·5 lbs. The engines when these diagrams were taken were working on the second grade of expansion, and were making 24 revolutions per minute.

Diagrams C *and* D, *Plate I.*—These diagrams were taken on the third trial of the "Rattler," March 31st, 1845, with a fresh breeze ahead and some sea. Diagram C was taken at 35 minutes past 10 A.M., and the time occupied in taking it was 6 minutes. The engines were making at the time 23 revolutions in the minute, and the vessel was making $5\frac{1}{2}$ knots an hour. Diagram D was taken on the same day, at $\frac{1}{2}$-past 3 P.M., the engines making 25 revolutions, and the vessel making 8·8 knots. The mean pressure upon the spring shown by diagram C is 47·89 lbs., and the mean pressure shown by three similar diagrams is 48·3 lbs. The mean pressure upon the spring shown by diagram D is 47·52 lbs., and the mean pressure shown by three similar diagrams is 47·26 lbs. The results given by diagrams C and D, therefore, are very nearly the same, and the difference in the appearance of the diagrams is caused by the difference in the velocity of rotation of the drum upon which the paper was wound. In diagram C the drum did not revolve with half the speed at which it revolved in the case of diagram D, and diagram D therefore is more drawn out. The greater irregularity of outline in diagrams C and D, than is exhibited in the case of diagrams A and B, is caused by the roughness of the sea.

Diagram E, *Plate I.*—This diagram was taken at 11 A. M. on the 1st of April, 1845, not during one of the trials with the "Alecto," but it is recorded as it exhibits about the best performance obtained. The engines were making, at the time, 26 revolutions, and the vessel was maintaining a speed of 10 knots through the water, with a breeze aft, but no sail set. The mean pressure on the spring, as indicated by this diagram, was 48·23 lbs.; but the mean pressure, as shown by five similar diagrams, was somewhat less than this, or 46·74 lbs. The mean pressure of the steam and vacuum in the cylinders, as ascertained by the indicator at the same time, was somewhat over 12 lbs. after deducting $1\frac{1}{2}$ lbs. for friction. This diagram, it will be remarked, is much less serrated than those which have preceded it, and the difference must be imputed to the influence of the following wind upon the ship and sea.

Diagram F, *Plate I.*—This diagram was taken on the seventh trial, on the 3d of April, 1845, at $\frac{1}{2}$ past 10 A. M.; the "Alecto," at the time, being towed by the "Rattler," at the rate of $7\frac{1}{2}\frac{1}{0}$ knots per hour. The engines were making, at the time, $24\frac{1}{2}$ revolutions per minute. The mean pressure upon the spring, as shown by this diagram, was 50·89 lbs., and the mean pressure exhibited by two similar diagrams is 50·72 lbs.; but another computation gives 52·44 lbs. The outline of this diagram is here less serrated than in the case of some of the preceding diagrams, which must be attributed to the diminished speed with which the vessel passed through the water.

Diagram G, *Plate I.*—This and two other similar diagrams were taken to test the accuracy of a conjecture which had been made respecting the cause of the serrated outline of the dynamometer diagrams. Taking the case of such an outline as that of diagram A, it was remarked that one of the larger projections was produced by each revolution of the engine, and one of the smaller fluctuations — of which the larger are built up — by each revolution of the screw. It was further remarked, that the thrust of the screw was greatest

when its two arms, or blades, were vertical, and therefore in a line with the stern-post; and its increased thrust, when in that position, was attributed to its operation upon the dead water in the rear of the stern-post, which travelled with the ship. It is obvious that, in the case of a screw working in the open sea, the thrust of the screw will be proportionate to the difference between the speed of the vessel and the speed with which the screw would advance if it were working in a stationary nut; and if the screw advances through the water merely with the velocity with which the vessel advances, there can be no thrust whatever upon it. If, however, instead of working in the open sea, the screw works in a tank of water which travels with the vessel, there will be some thrust upon the screw-shaft with every velocity of revolution; and the dead water lying in the rear of the stern-post, as it travels with the ship, acts in much the same manner as if it were enclosed in a tank affixed to the vessel. It follows, consequently, that when the screw comes into this dead water, the thrust is no longer that which answers to the difference in the advance of the screw and the ship, but more nearly that which answers to the whole advance of the screw. If this resistance were opposed to the screw at every part of its revolution, the result would only be, that the velocity of its rotation would be diminished until the resistance was brought into equilibrium with the force exerted by the engine. But, as the increased resistance exists only when the screw is in one position, the momentum of the screw, and of the other machinery, carries the screw through that point without any diminished velocity; and the consequence is, that the thrust of the screw is momentarily increased. The thrust is also increased in that part of the stroke in which the engines exert the largest power; and these combined influences give to the dynamometer diagram that serrated outline which marks the fluctuations in the thrust.

It will be obvious from these considerations that if the main cause of the serrated outline of the dynamometer diagrams be the entrance of the screw, when its arms are vertical, into the dead water in the rear of the stern-post when the vessel passes rapidly through the water, that serrated outline will disappear when the screw is in action without the vessel being moved at all; and accordingly, diagram G and two similar diagrams were taken to determine this point. The vessel having been first propelled astern at the rate of 8 knots, the engines making 26 revolutions, the motion was suddenly reversed so as to compel the vessel to go ahead. While, however, thevessel was still going somewhat astern, and before any head-way had been acquired, diagram G and two similar diagrams were taken, and it was found, as had been expected, that the serrated outline had entirely disappeared. The mean pressure upon the spring as indicated by diagram G is 54·71 lbs., and the mean pressure as exhibited by three similar diagrams is 51·72 lbs.

Diagram H, *Plate 1.* — This and two similar diagrams were taken on the ninth trial, when the vessels were set to try their relative tractive powers when tied stern to stern. This trial was made on the 3rd of April, 1845; the "Rattler's" engines at the time were making 19 revolutions, and she towed the "Alecto" astern against the whole force of her engines at the rate of $2\frac{8}{10}$ knots per hour. The average pressure upon the dynamometer

spring exhibited by diagram H. is 52·02 lbs., and the average pressure exhibited by three similar diagrams is 53·6 lbs. It will be remarked that in these latter experiments, where from the diminished speed of the vessel, the speed of the engines has somewhat decreased, the thrust of the screw-shaft has become somewhat greater than before, owing to the accumulation of steam within the boiler, and the increased pressure of steam upon the pistons produced by a more ample supply of steam. With the same pressure upon the pistons there could be no material increase of pressure upon the screw-shaft, whatever the velocity of its rotation or the speed of the vessel might be.

Diagram I, *Plate I.* — This diagram was taken at ½ past 7 P. M. on the 3rd of April, 1845, to determine the thrust upon the screw-shaft when the engines were working with the lowest grade of expansion, — the engines making 21 revolutions per minute. There was no wind, and the speed of the vessel was 8¼ knots per hour. The mean pressure upon the dynamometer spring as indicated by diagram I is 31·81 lbs., and the mean pressure as shewn by four such diagrams is 31·7 lbs. Among the indicator diagrams given in Plate II. will be found the diagram answering to this experiment, from whence the amount of the expansion may be ascertained.

Diagram K, *Plate I.* — This diagram was taken to shew the thrust upon the screw-shaft when the steam was shut off as far as could be done conveniently by the throttle-valve without stopping the engines altogether. When shut off so as to reduce the revolutions to 17, the speed of the vessel was 6 knots; and when shut off, so as to reduce the revolutions to 12, the speed of the vessel was 4 knots. Diagram K was taken when the engines were making 12 revolutions, and the speed of the vessel was 4 knots an hour. The mean pressure upon the spring of the dynamometer as shewn by diagram K is 24·44 lbs., and the mean pressure as shewn by four similar diagrams is 24·04 lbs. Here, it will be remarked that the projections of the diagram are very much drawn out, as the alternations in the thrust occur less rapidly, owing to the fewer number of revolutions; and this effect is tantamount, in its operation on the outline of the diagram, to that which would be produced by giving an increased velocity to the drum on which the paper is wound.

Diagram L, *Plate I.* — This diagram was taken on the tenth trial of the "Rattler" at 11 A. M. on the 8th of April, 1845. The sea was moderate, and a fresh breeze was blowing at 4 points on the larboard bow. The engines were making 24½ revolutions, and the mean pressure on the pistons, after deducting 1½ lbs. for friction, was 11·93 lbs. The speed of the vessel was 8½ knots. The mean pressure upon the spring of the dynamometer exhibited by diagram L, is 40·81 lbs., and the mean pressure as exhibited by four such diagrams is 41·84 lbs., or by another calculation 40·16 lbs.

Diagram M, *Plate I.* — This is one of the most important diagrams of the series. It was taken at the eleventh trial of the "Rattler" at ½ past 10 A. M. on the 10th of April, 1845, with a strong head wind and a heavy head sea. The engines at the time were making 22 revolutions, and the speed of the vessel was, from the severity of the weather, only 4·2 knots. The mean pressure upon the spring of the dynamometer as shewn by this

diagram is 41·89 lbs., and the mean pressure exhibited by five similar diagrams is 41·93 lbs., or by another determination; 49·8 lbs. but the former of these quantities is the more correct.

On the twelfth trial of the "Rattler," no dynamometer diagrams were taken, and those above described, and which will be found delineated in Plate I., will serve to give a very just idea of the general nature of the results obtained in these experiments.

Indicator Diagrams, Plate II.—In Plate II. will be found the indicator diagrams, taken from the cylinders both of the "Rattler" and the "Alecto" in the foregoing trials, and each figure is so designated as to enable it to be referred to the particular trial at which it was taken, and also to enable its relation to the dynamometer diagrams to be readily traced. An indicator diagram, it may be explained, serves to determine the efficiency of an engine by registering the varying pressures, both of the steam and of the vacuum, throughout the stroke. This is done by applying, to the top or bottom of the cylinder, a small cylinder and piston of half an inch or an inch diameter; and this small piston is pressed by a spring, so that the extent to which it is pressed up or sucked out down, when a connexion is opened between it and the engine, determines the amount of steam pressure above the atmosphere, and of vacuum below the atmosphere, which are urging the piston. If now a pencil be affixed to the small piston, and this pencil be made to press upon a drum or piece of paper moved in a horizontal direction, it will follow that the compounded vertical motion of the pencil and horizontal motion of the paper will cause a figure to be traced, the nature of which will show the power with which the engine is working. This figure is what is termed an indicator diagram. Before the cylinder of the indicator is put in connexion with the engine, a horizontal motion is communicated to the paper, which traces a horizontal line called the *atmospheric line;* and all that part of the diagram appearing above the atmospheric line is due to the pressure of the steam, and all that part appearing below it is due to the pressure of the vacuum. The total height of the diagram indicates the total force urging the piston; and if any convenient number of ordinates be drawn as in some of the figures in Plate II., so as to ascertain the mean height of the diagram, then that height measured on a scale which must be regulated by the diameter of the piston of the indicator and the strength of its spring, will give the number of pounds pressure urging each square inch of the piston. Taking from this pressure $1\frac{1}{2}$ lbs. to compensate for the power consumed in overcoming the friction of the engine itself, and multiplying the residual pressure by the area of both pistons in square inches, by the velocity of motion of the piston in feet per minute, and dividing by 33,000, we have the number of actual horses power with which the engines work.

CHAPTER V.

ON THE COMPARATIVE MERITS OF SCREWS OF DIFFERENT KINDS.

NUMEROUS experiments have been made in Her Majesty's steam vessels "Rattler," "Dwarf," and "Minx," and in the French war steamer "Pelican," to determine the comparative efficacy of different kinds of screw propellers. The whole of these experiments have afforded valuable results, but the experiments made in the "Pelican" are more elaborate than the others, and appear to have been conducted with greater scientific precision. There is one important point, however, in which the French are less satisfactory than the English experiments,—there was no dynamometer employed to measure the thrust of the shaft; and although the speed achieved by a given screw, relatively with the power expended, gives a measure of the efficiency of that screw in propelling, yet it is very advantageous to be able to measure the direct thrust of the shaft as well as the power of the engines and the speed of the vessel.

The experiments in the "Rattler" commenced in 1843, and their main purpose was to ascertain the best length of screw to obtain a maximum speed of ship. The original screw of the "Rattler" was 9 feet in diameter, 5 feet 6 inches long, and 11 feet pitch. It was, in fact, one half turn of a double-threaded screw, such as had previously been used in the "Archimedes." Its length was successively reduced to 4 feet 3 inches, 3 feet, 1 foot 6 inches, and 1 foot 3 inches. An advantage was found to result from diminishing the length. Various kinds of screws were tried, and also propellers, consisting of flat blades set at an angle with the axis, but it was found that the ordinary screw with two blades and with a uniform pitch was as efficient a propeller as any of the other varieties.

The experiments in the "Dwarf" were made in 1845, and their main purpose was to determine the proper pitch and length of the screw relatively with its diameter. The screw employed was a screw of two blades, and of a uniform pitch. The diameter of the screw was 5 feet 1 inch, and the pitch was increased from 8 feet to somewhat more than 13 feet. With a pitch of 8 feet four experiments were made, the length of the screw being progressively reduced from 2 feet 6 inches to 2 feet, 1 foot 6 inches, and 1 foot. The average number of revolutions of the engine per minute with these lengths of screw were 28·3, 29·6, 30·1, and 32·2 revolutions respectively; and the power exerted by the engines was 130½, 151½, 137, and 169 horses in the respective trials. The speed of the vessel increased somewhat as the length of the screw was diminished. In the trial with the screw 2 feet 6 inches long, the speed of the vessel was 8·65 knots per hour, but in the other trials the speed increased to 8·95, 8·95, and 9.11 knots. Relatively with the power consumed, however, the result with the shortest of these screws was worse than with the longest of them.

Eight experiments were made with different lengths of a screw of 10·32 feet pitch, and twelve experiments were made with different lengths of a screw of 13·23 feet pitch. With a screw 2 feet 10 inches long and of 10·32 feet pitch, the area of the blades is the same as in the case of a screw 2 feet 6 inches long and 8 feet pitch, — namely, about 22 square feet: and such a screw with 30·9 revolutions per minute of the engine, and with the exertion of about 144 horses power, propelled the vessel at a speed of 8·89 knots per hour. The efficacy of such a screw, therefore, is as nearly as possible the same as that of a screw of the same area of blade and of 8 feet pitch. Again, a screw 3 feet $1\frac{5}{8}$ inches long and 13·23 feet pitch has the same area of blades as a screw 2 feet 10 inches long and 10·32 feet pitch and such a screw, with 34 revolutions of the engine in a minute, and with the exertion of $149\frac{1}{2}$ horses power, achieved a speed of vessel of $8\frac{1}{2}$ knots per hour. The performance, therefore, obtained with the coarser pitch, is not quite equal to that obtained with the finer pitch; and throughout the whole series of the experiments with the 13·23 feet pitch, and with the length of the screw varying from 1 foot up to somewhat more than 3 feet, the result is inferior to that obtained both with the 8 and 10 feet pitches. The best result in the series, or in other words the largest speed of the vessel relatively with the power consumed, is that obtained with the screw 18 inches long and 8 feet pitch.

The experiments with the "Minx" were made in 1847 and 1848; their main purpose was to determine the comparative efficiency of Smith's screw with a uniform pitch, and Woodcroft's screw with an increasing pitch. A screw was also tried of a form suggested by Mr. Atherton, chief engineer at Woolwich, formed with a less pitch at the centre than at the circumference, in order that the central part of the screw might advance through the water like a screw working in a nut, while the circumferential part of the screw would alone be influential in propelling. The design of this arrangement is to prevent a centrifugal motion from being given to the water by the action of the central part of the screw, and screw propellers are now very frequently constructed in this manner; the difference between the pitch at the boss and the pitch at the circumference being usually made about 10 per cent. The pitch of a screw is the distance measured in the direction of the axis between any one thread and the same thread at its next convolution, so that the pitch is an expression for the coarseness or fineness of the screw; and a spiral stair of the ordinary kind is a screw of a uniform pitch. If, however, the steps of the stair become higher and higher in ascending the tower, then such a stair forms a screw with an increasing pitch in the direction of its length; and if the steps are all alike, but each step is deeper at the centre than at the circumference of the tower, then such a stair forms a screw with its pitch increasing from the centre to the circumference. A form of screw was also tried in the Minx, in which the pitch increased from the centre to the circumference and in the direction of the length at the same time; and this form of screw was found to realize a very excellent performance. Upon the whole, however, the amount of benefit obtained by departing from the form produced by a uniform pitch was found to be very inconsiderable; and this will be especially the case when the screw is so proportioned that but little slip can take place.

SCREWS TRIED IN THE "RATTLER."

THE forms of the several screw-propellers employed in the "Rattler" are represented in the accompanying woodcuts. Figure 174, is a perspective view of Smith's screw, of two threads or blades, as finally settled in the "Rattler," and this is the form of screw now commonly adopted in the navy of this country. Figure 175 is an end view of the same screw, or an elevation looking against the end of the shaft. Smith's screw of three threads differs from this screw only in having three arms instead of two. Figure 176. is an end view, and figure 177. a side view, of Steinman's propeller. This propeller is intended to be a reproduction of Blax-

Figs. 174, 175, 176, 177.

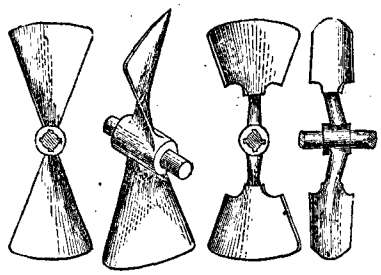

SUMMARY of EXPERIMENTS made with various Screw Propellers, in H. M. S. V. "Rattler," in 1843, 1844, and 1845. At a mean draught of 12 feet 3 inches the area of mid-ship section of "Rattler"=380 square feet; the breadth extreme is 32 feet 8½ inches; the nominal power is 200 horses.

No. of Trial.	Date of Trial.	Form and Description of Screw Propeller.	Diameter of Screw.	Length of Screw.	Pitch of Screw.	Revolutions of the Engine per Minute.	Revolutions of the Screw per Minute.	Rate of the Screw per Hour.	Rate of the Ship per Hour.	Slip in Knots and per Cent. per Hour.	Remarks.
	1843,		*Ft. in.*	*Ft. in.*	*Ft. in.*					*Per Cent.*	
1	Oct. 30	Smith's 2 threads	9 0	5 6	11 0	- -	- -	- -	- -	- - -	No trial was made at the measured mile, nor the speed of the vessel determined in any way that could be relied on.
2	Nov. 6	do. do.	9 0	4 3	11 0	23·5	93·0	10·088	8·343	1·745 or 20·91	These early experiments ought not to be noticed, being considered merely preliminary to the trial with "Prometheus" (sister ship).
3	„ 8	do. do.	9 0	4 3	11 0	24·0	94·0	10·197	8·247	1·950 or 23·64	
4	„ 16	do. do.	9 0	3 0	11 0	25·0	98·0	10·631	8·865	1·766 or 19·92	
	1844.										
5	Feb. 3	do. do.	9 0	3 0	11 0	26·4	106·0	11·499	9·240	2·259 or 24·44	Speed of "Prometheus" 8·757 knots per hour; slip of strap 2·70 per cent.
6	„ 9	Smith's 3 threads	9 0	2 3	11 0	24·2	94·3	12·297	8·237	4·060 or	One of the straps broke.
7	„ 19	do. do.	9 0	1 8½	11 0	23·1	92·0	9·980	8·096	1·884 or	Wind fresh abeam.
8	„ 23	do. do.	9 0	1 7	11 0	24·8	99·3	10·955	8·561	2·384 or 21·8	Light wind abeam, steam very low.
9	„ 28	Smith's 2 threads	10 0	3 0	11 0	23·8	94·6	- -	8·958	- - -	Two straps broke; wind abeam.
10	March 5	do. do.	10 0	3 0	11 0	24·8	98·0	10·780	9·231	1·360 or 12·9	
11	„ 11	do. do.	10 0	2 0	11 0	25·4	100·6	10·910	9·448	1·462 or 13·4	Slip of strap 1·1 per cent.
12	„ 14	Smith's 3 threads	9 0	1 2	11 0	27½ to 28	- -	- -	- -	- - -	No result in consequence of the threads of the screw breaking off at the axis.
13	„ 18	Woodcroft's 4 do.	9 0	1 7	increasing pitch 11ft. forward, 11·55 aft.	26·2	104·3	11·323	8·180	3·143 or $2_{7·77}$	Wind abeam; slip of strap 1·0 per cent.
14	„ 20	Smith's 2 threads	10 0	1 3	11 0	26·4	105·5	10·6	9·673	- - -	Screw broke.
15	April 13	Woodcroft's 4 do.	9 0	1 7	increasing pitch 11ft. forward, 11·55 aft.	24·1	95·9	10·674	8·159	2·515 or 23·56	Wind light abeam; slip of strap 0·634 per cent.
16	„ 18	do. 2 do.	9 0	1 7	ditto.	27·0	107·5	11·950	8·632	3·318 or 27·76	Wind very light.
17	„ 23	Smith's 3 threads	9 0	1 2	11 0	27·3	108·4	11·769	9·980	1·889 or 16·0	Position of screw 1 foot before centre of opening in the dead-wood; chamfered on the after-side.
18	„ 29	do. do.	9 0	1 2	11 0	25·3	100·8	10·942	9·628	1·314 or 12·0	Wind fresh eastward.
19	May 6	Smith's 2 threads	10 0	1 6	11 0	25·7	102·1	11·078	9·721	1·357 or 12·24	Screw 20 inches in length at the boss; position about 10 inches before centre of opening.
20	June 8	do. do.	10 0	1 3	11ft. outside 9ft. inside.	27·4	108·2	11·737	9·579	2·158 or 18·3	Wind light.
21	„ 13	do. do.	10 0	1 6	ditto	27·9	110·7	12·000	9·811	2·189 or 18·24	Position of screw 1 ft. 2 in. abaft centre of axis.
22	„ 27	do. do.	10 0	1 3	11 0	26·1	103·6	11·246	10·074	1·172 or 10·42	One of the straps broke. No wind.
23	July 13	do do.	10 0	1 3	11 0	26·0	103·4	11·223	10·014	1·207 or 10·77	Passed the "Caledonia," Scotch steamer, at the rate of 1 m. per hour.
24	Oct. 4	do do.	10 0	1 3	11 0	25·2	100·4	10·891	9·659	1·232 or 11·22	
25	„ 10	Sunderland's do.	8 2	8 0	26 0	17·4	69·9	17·090	8·380	9·610 or 53·5	Angle of propeller 45 degrees.
26	„ 12	Steinman's do.	10 1	- -	11 6	26·0	104·2	11·817	9·537	2·280 or 19·2	Wind light.
27	„ 15	Sunderland's do.	with 9½ in. cut from under side of plane.	- -	26 0	14·2	57·0	18·564	8·346	10·218 or 55·0	
28	„ 17	Smith's do.	10 0	1 3	11 0	27·0	108·0	11·715	9·893	1·822 or 15·5	Steam low.
	1845.										
29	Jan. 10	Hodgson's do.	- -	10 0	- -	- -	- -	- -	6·856		
30	„ 13	Smith's do.	10 0	1 3	11 0	- -	- -	- -	- -	- - -	Wind very high; Reach crowded with shipping; no result in consequence; ship fully rigged and equipped for sea.
31	„ 22	Steinman's do.	10 0	altered by adding to the surface to'ds the centre.	11 6	25·22	100·94	10·945	9·457	1·488 or 15·73	Wind very light.
32	„ 23	Smith's do.	10 0	1 3	11 0	26·98	107·92	11·707	9·638	2·069 or 17·67	Stiff breeze; steam low.

land's, described at page 32. of the present work; but the propelling plates instead of being flat are somewhat twisted, so as virtually to constitute a screw with the central portion cut away. Figure 178. represents Sunderland's propeller as applied in the "Rattler." This propeller, which is described at page 36. of the present work, consists of two flat plates set upon arms affixed to an axis revolving beneath the water at the stern; and in the "Rattler" this propeller was placed in a hole in the dead-wood, instead of projecting out behind the rudder as Sunderland proposed in his patent of 1843.

Figs. 178, 179.

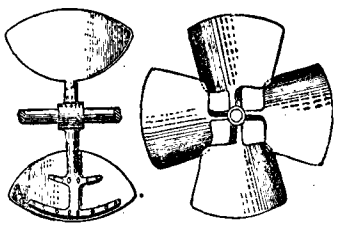

Figure 179. represents Woodcroft's propeller as applied in the "Rattler." This propeller, it will be remarked, has four arms or blades, and the pitch of the screw at its leading edge is less than the pitch at its terminal edge. The original form of Woodcroft's screw is shown at page 20., but in the "Rattler" its length was reduced, as had previously been found to be advantageous in the case of Smith's screw with a uniform pitch.

Hodgson's screw as applied in the "Rattler," did not realize a satisfactory performance. In figure 180. is represented that form of Hodgson's screw which is now usually employed, and with which very excellent results have been obtained. This species of screw has been much used in France, Holland, and other countries of the Continent; and in some cases in which a common screw has been superseded by a screw of this description, an improvement has been obtained in the speed of about a knot an hour. Such a result, however, will only ensue when the original screw has been of inadequate dimensions, so that the loss by slip has been large in amount, and the more the slip is reduced the less will become the advantage of any deviation from Smith's form of screw with a uniform pitch.

Fig. 180.

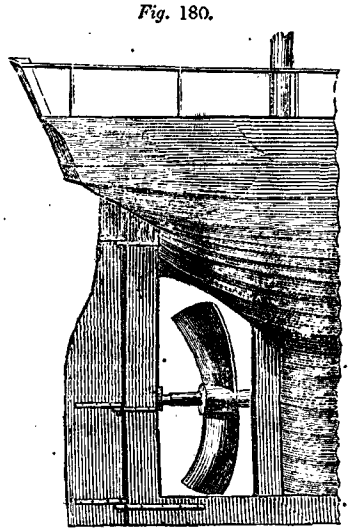

HODGSON'S SCREW PROPELLER.

SCREWS TRIED IN THE "DWARF."

The particulars of the performance of the screws, 5 feet 8 inches diameter, but of different pitches and lengths, which were tried in the "Dwarf," in 1845, are exhibited in the following table. These experiments were made by Mr. Murray, and it is necessary to remark that there are such obvious inconsistencies in the quantities set down as representing the pressure shown by the dynamometer, that those quantities and the numerical results deduced from them must be rejected. Thus it will be seen on referring to the table, that in experiments 5. to 8., the thrust of the shaft, as shown by the dynamometer, is set down as less than the thrust in experiments 21. to 24. although the same screws were used in both cases, and although the power exerted by the engines was greater in the 1st experiments than in the 2nd. The result of this

EXPERIMENTS made with H. M. Screw Steamer "Dwarf," in 1845, to determine the proper Pitch and Length of Screw Propellers, relatively with their Diameters.

Burden in tons 163 $\frac{89}{94}$; depth in hold 9 feet; draught of water constant 7 ft. aft.; 5 ft. 10 in. forward; length between perpendiculars 130 ft.; breadth 16 ft. Engines; diameter of cylinder 40 in.; length of stroke 2 ft. 8 in.

No. of Experiment.	Date of Experiment.	Diameter of the Screw.	Pitch of the Screw.	Length of the Screw.	Area of Blades of the Screw.	Angle of the Screw.	Average Revolutions of the Engine per Minute.	Average Revolutions of the Screw per Minute.	Proportion of Revolution of the Screw to the Engines.	Average Pressure of Steam in the Cylinder taken by the Indicator.	Average Pressure on Spring Balance of Dynamometer.	Average Pressure at the end of Shaft indicated by Dynamometer.	Speed of Screw per Hour.	Slip of the Screw per Cent.	Speed of the Vessel per Hour.	Gross average Power exerted by Engines in the Cylinder.	Average Power expended in propelling Ship, as indicated by Dynamometer.	Speed of the Vessel computed as if the Power exerted had been 160 Horses.	Gross Horses Power in the Cylinder computed as necessary to give a Speed of 9 Knots per Hour.	Ratio of Gross Indicator to Dynamometer Power.	Difference between Indicator and Dynamometer Powers.
	1845.	Ft. in.	Ft. in.	Ft. in.	Sq. ft.					lbs.	lbs.	Tons.	Knots.		Knots.	Horses.	Horses.	Knots.	Horses.		Horses.
1	June 5.	5 8	8 0	2 6	22·2	24·12	28·333	146 165	5·16 : 1	11·36	33·87	1·361	11·532	25·017	8·647	130·736	80·993	9·249	147·41	1·62	49·723
2	„ 7	-	-	2 0	17·8	-	29·604	152·754	-	12·6	37·191	1·494	12·052	25·697	8·955	151·512	92·102	9·119	153 607	1·65	59·41
3	„ 11	-	-	1 6	13·3	-	30·124	155·441	-	11·2	35·3	1·418	12·264	27·112	8·939	137·043	87·263	9·413	139·871	1·57	49·78
4	„ 13	-	-	1 0	8·9	-	32·166	165·973	-	12·92	37·728	1·516	13·094	30·419	9·111	168·805	95·06	8·95	162·71	1·78	73·745
5	„ 30	-	10·32ft	1 8 1/16	13·3	30·6	31·763	127·05	4 : 1	11·53	26·697	1·073	12·931	33·447	8·606	148·757	63·538	8·818	170·135	2·33	85·219
6	July 2.	-	-	2 3 1/4	17·8	-	30·823	123·293	-	10·89	23·807	·957	12·548	30·823	8·743	136·342	57·561	9·222	148·722	2·34	78·781
7	„ 4	-	-	1 1	8·9	-	34·943	139·772	-	10·85	20·833	·837	14·225	36·387	9·049	153·998	52·135	9·165	151·51	2·95	101·863
8	„ 8	-	-	2 10 1/16	22·2	-	30·899	123·595	-	11·46	22·75	·914	12·572	29·295	8·889	143·832	55·924	9·21	149·003	2·57	87·908
9	„ 16	-	13·23ft	1 10 3/16	13·3	36·37	36·489	114·213	3·13 : 1	10·91	29·25	1·175	14·902	40·411	8·83	161·701	71·83	8·849	168·345	2·25	89·871
10	„ 18	-	-	3 1	22·2	-	34·048	106·571	-	10·81	33·687	1·353	13·405	38·706	8·523	149·401	79·4	8·718	176·033	1·9	70 101
11	„ 19	-	-	1 3 1/16	8·9	-	40·222	125·894	-	10·83	43·25	1·738	16·426	44·758	9 074	176·937	108·53	8·775	172·643	1 62	68·407
12	„ 22	-	-	2 6	17·8	-	35·714	111·784	-	11·47	43·385	1·743	14·585	39·479	8·827	166·39	105·906	8·713	176·366	1·57	60 484
13	„ 29	-	-	2 6	17·8	-	26·42	105·682	4 : 1	14·16	44·319	1·781	13·789	39·88	8·29	151·957	101·604	8·434	194·439	1·49	50·353
14	Aug. 1.	-	-	3 1	22·2	-	25·397	101 588	-	13·53	43·069	1·73	13·254	39·565	8·01	139·574	95·403	8·517	197·986	1·47	44·171
15	„ 5	-	-	1 10 3/16	13·3	-	26·028	104·111	-	11·09	42·	1·688	13·584	41 674	7·923	117·264	92·025	8·788	171·853	1·27	25·041
16	„ 6	-	-	1 3 1/16	8·9	-	29·83	119·322	-	12·17	48·111	1·983	15·568	46·172	8·38	147·458	110·586	8·611	182·669	1·32	36·872
17	„ 13	-	-	1 3 1/16	8·9	-	21·658	111·756	5·16 : 1	13·26	40·888	1·643	14·581	46·122	7·856	116·651	88·831	8·729	175·426	1 31	27·82
18	„ 15	-	-	1 10 3/16	13 3	-	19·889	102·629	-	14·14	40·416	1·624	13 39	42·913	7 644	114·232	85·436	8·553	186·446	1·34	28·796
19	„ 16	-	-	2 6	17·8	-	18·98	97·938	-	14·46	43·083	1·731	12·778	41·165	7·518	111·479	89·573	8·48	191·255	1·23	21·906
20	„ 18	-	-	3 1	22·2	-	18·491	95·413	-	14·49	42·555	1·71	12·449	39·553	7·215	108·831	88·557	8·556	186·192	1·22	20·274
21	„ 19	-	10 32ft	2 10 1/16	22·2	30·6	22·514	116·171	-	13·92	49·486	1·988	11·823	29·933	8·284	127·297	113·368	8·94	163·24	1·12	13·929
22	„ 20	-	-	1 8 7/16	13·3	-	24·88	128·382	-	13·26	47·566	1·911	13·066	36·423	8·307	134·005	109·272	8·312	170·418	1·23	24·733
23	„ 21	-	-	1 1	8·9	-	26·656	137·546	-	12·79	49·622	1·994	13·999	38·51	8·608	138·481	118·125	9·033	158·272	1·17	20·356
24	„ 25	-	-	2 3 1/4	17·8	-	23·864	123·136	-	13·06	48·347	1·943	12·532	32·948	8·403	126·594	112·349	9·085	155·538	1·13	14·245
25	„ 28	4 5½	-	1 8 7/16	9·51	24·12	30·807	158·965	-	11·58	45·069	1·811	15·677	49·353	7·94	144·405	98·961	8·222	211·033	1·46	45·944

SUMMARY OF EXPERIMENTS MADE WITH VARIOUS

At a mean draught of 5 ft. 2½ in., the area of mid. section of the "Minx" = 82 sq. ft.; the breadth extreme is 22 ft. 9 in.; diameter of cylinder 34 in.;

Date of Experiment.	Draught of Water.	Dimensions of the Screw.				Average Revolutions of the		Average Pressure.			Speed of the	
		Diameter.	Pitch.	Length.	Area.	Angle.	Engine.	Screw.	Of Steam in Cylinder taken by Indicator.	On Spring Balance of Dynamometer.	At the end of Shaft indicated by Dynamometer	Screw.	Vessel.
	Ft. in. Ft. in.	Ft. In.	Ft. In.	Ft. In.	Sq. Ft.	°	Per Minute.		Lbs.	Lbs.	Tons.	Knots per Hour.	
Screws of uniform Pitch.													
1847. 4th June	Fore 4 5½ Aft 5 11½	4 6	5 10	1 0	Corners cut off 7·1	22 24	49·55	198·2	9·36	Defective.	-	11·403	7·669
5th „	Fore 4 6 Aft 5 11	do.	do.	do	do.	- - -	51·06	204·2	9·67	do.	-	11·751	7·848
9th July	Fore 4 6½ Aft 5 10½	-	do.	0 8	4·93	do.	54·16	216·6	9·42	-	-	12·464	8·123
17th Aug.	Fore Aft	do.	do.	0 6	3·7	do.	56·8	227·2	9·14	-	-	13·071	7·677
4th Sept.	Fore Aft	do.	do.	1 0	Corners cut off 7·1	do.	54·16	216·7	10·12	-	-	12·468	7·882
Woodcroft's. — Pitch expanding Fore and Aft.													
(Fine pitch forward) 8th July	Fore 4 6½ Aft 5 10½	4 6	Fore 4 10 Aft 5 2	1 0	Corners cut off 7·2	Fore 18 53 Aft 20 4	54·29	217·2	9·52	Dynamometer.		Fore 10·351 Aft 11·065	8·069
(Coarse pitch forward) 17th Aug.	do.	do.	Fore 5 2 Aft 4 40	do.	do.	Fore 20 4 Aft 18 53	55·86	223·4	8·81	-	-	Fore 11·386 Aft 10·651	6·625
Mr. Atherton's. — Pitch expanding from the Boss to the Circumference.													
11th Aug.	Fore Aft	4 6	Boss 4 10 Cir. 5 4	1 0	Corners cut off 7·3	Boss 18 53 Cir. 20 40	53·4	213·6	9·42	-	-	Boss 10·381 Cir. 11·235	7·442
„ „	Fore 4 7 Aft 5 11	do.	Boss 4 0 Cir. 5 0	do.	do. 7·8	Boss 15 48 Cir. 19 29	59·67	238·7	9·21	-	-	Boss 9·415 Cir. 11·769	7·674
4th Sept.	Fore Aft	do.	Boss 4 3 Cir. 6 3	do.	do. 7·5	Boss 16 44 Cir. 23 51	54·15	216·6	10·34	-	-	Boss 9·078 Cir. 13·35	7·957
Screws of uniform Pitch.													
16th Sept.	Fore 4 7 Aft 5 10½	4 6	5 10	0 10	5·97	22 24	53·96	215·8	8·83	40·52	1 785	12·417	7·521
17th „	Fore 4 6½ do.	-	5 0	1 0	Corners cut off 7·2	19 29	62·44	249·8	9·95	47·75	2·104	12·315	8·354
„ „	Fore Aft	-	5 10	0 8	4·93	22 24	59·45	237·8	9·91	45·17	1·99	13·68	7·972
„ „	Fore Aft	4 6	do.	0 10	5·97	do.	58·	232·	10·12	44·97	1·981	13·346	8·043
„ „	Fore Aft	do.	do.	1 0	Corners cut off 7·1	do.	54·68	218·7	10·17	44·32	1·952	12·583	7·843
Mr. Atherton's. — Pitch expanding from the Boss to the Circumference.													
18th Sept.	Fore 4 6½ Aft 5 10½	4 6	Boss 4 10 Cir. 5 4	1 0	Corners cut off 7·3	Boss 18 53 Cir. 20 40	56·71	226 8	9·41	44·39	1·956	Boss 10·813 Cir. 11·932	7·708
„ „	Fore Aft	do.	Boss 4 0 Cir. 5 0	-	do. 7·8	Boss 15 48 Cir. 19 29	65·5	262·	9·54	42·9	1·89	Boss 10·335 Cir. 12·919	8·038
„ „	Fore Aft	do.	Boss 4 3 Cir. 6 3	-	do. 7·5	Boss 16 44 Cir. 23 51	56·6	226·5	10·18	48·12	2·12	Boss 9·495 Cir. 13·963	8·083
14th Oct.	Fore 4 6½ Aft 5 11	4 6	do. do.	-	do. 7·5	Boss 16 44 Cir. 23 51	56·01	224·	10·99	48·77	2·149	Boss 9·391 Cir. 13·81	8·014
Mr. Atherton's Compound Expanding Pitch, uniform at the Boss, but expanding from the Boss to the Circumferenee, and increasing from the Circum-													
14th Oct.	Fore Aft.	4 6	uniform Boss 4 3 Cir. Fore 5 6 „ Aft 7 0	0 9	5·95	Boss 16 44 Cir. Fore 21 15 „ Aft 26 20	53·55	214·2	11·33	47·7	2·101	Boss 8·977 Cir. Fore 11·617 „ Aft 14·786	8·001
							The vessel was docked and her bottom cleaned ten days previous to the fol-						
Screws of uniform Pitch.													
1848. 30th June	Fore 4 5 Aft 6 1	4 6	5 10	1 0	Corners cut off 7·1	22 24	52·83	231·32	11·891	33·437	1·52	13·306	8·445
Woodcroft's. — Pitch expanding Fore and Aft.*													
30th June	Fore 4 5 Aft 6 1	4 6	Fore 5 4 Aft 5 8	1 0	Corners cut off 6·8	Fore 20 40 Aft 21 51	63·37	253·48	10·872	35·462	1·612	Fore 13·332 Aft 14·165	8·466
Screw of uniform Pitch.													
30th June	Fore 4 5 Aft 6 0	4 6	5 6	1 0	Corners cut off 7·1	21 15	60·14	240·56	11·43	34·98	1·59	13·047	8·514
Mr. Atherton's. — Pitch expanding from the Boss to the Circumference.													
30th June	Fore 4 5 Aft 6 0	4 6	Boss 4 3 Cir. 6 3	1 0	Corners cut off 7·5	Boss 16 44 Cir. 23 51	59·6	238·4	11·862	37·773	1·717	Boss 9 992 Cir. 14·694	8·762
Mr. Atherton's Compound Expanding Pitch, from the Boss to the Circumferenee, and Fore and Aft.													
30th June	Fore 4 3 Aft 6 1	4 6	uniform Boss 4 3 Cir. Fore 5 6 „ Aft 7 0	0 9	5·95	Boss 16 44 Cir. Fore 21 15 „ Aft 26 20	54·16	216·64	10·931	34·222	1·556	Boss 9·079 Cir. Fore 11·75 „ Aft 14·954	8·406
Screw of uniform Pitch.													
1st July	Fore 4 5 Aft 6 0	4 6	5 10	0 10	5·97	22 24	63·	252·	12·26	37·337	1 697	14·958	8·765
Woodcroft's. — Pitch expanding Fore and Aft.													
1st July	Fore 4 5 Aft 6 0	4 6	Fore 5 4 Aft 5 8	1 0	Corners cut off 6·8	Fore 20 40 Aft 21 51	66·37	365·48	11·196	40·13	1·824	Fore 13·964 Aft 14·837	8·702
Screw of uniform Pitch.													
1st July	Fore 4 5 Aft 6 0	4 6	Fore 4 10 Aft 5 2	1 0	Corners cut off 7·1	21 15	65·34	261·36	12·132	39·855	1·812	14·177	8·88
Woodcroft's. — Pitch expanding Fore and Aft.													
1st July	Fore 4 5 Aft 6 0	4 6	5 6	1 0	Corners cut off 7·2	Fore 18 53 Aft 20 4	63·53	254·12	12·194	41·313	1·878	Fore 12·114 Aft 12·949	9·137
Screws of uniform Pitch.													
1st July	Fore 4 5 Aft 6 0	4 6	5 0	1 0	Corners cut off 7·2	19 29	65·49	261·96	12·	38·3	1·741	12·916	8·844
12th „	do.	do.	5 10	do.	7·1	22 24	64·23	256·92	12·967	42·05	1·912	14·779	9·43
„ „	do.	do.	5 0	do.	7·2	19 29	62·52	250·08	10·219	33·542	1·525	12·331	8·531
Woodcroft's. — Pitch expanding Fore and Aft.													
12th July	Fore 4 5 Aft 6 0	4 6	Fore 4 10 Aft 5 2	1 0	Corners cut off 7·2	Fore 18 53 Aft 20 4	59·63	238·52	10·712	35·733	1·625	Fore 11·369 Aft 12·153	8·64

* This screw, on Woodcroft's principle, was made at the factory at Woolwich; Mr. Woodcroft was written to, but declined to specify the proportion of extremes suitable to a mean pitch of 5ft. 6in.

SCREW PROPELLERS OF TWO BLADES IN H. M. S. V. "MINX," IN 1847 AND 1848.

length of stroke 2 ft. 9 in.; nominal horse power 100; multiple of screw gearing 4.; ratio of multiplying power of dynamometer 98·68 : 1.

Slip of the Screw.	Gross average Power exerted by the Engines in the Cylinders.	Average Power exerted in propelling Ship as indicated by Dynamometer.	Speed of the Vessel computed as if the P. exerted had been 100 Horses.	Gross H. P. in the Cylinders computed as necessary to give speed of 8 knots per H.	Ratio of gross Indicator to Dynamometer Power.	Difference between the Indicated and Dynamometer Powers.	Per centage of Loss, taking Indicator power as 100.	REMARKS.
Per Cent.	Horses.		Knots.			Horses.		
32·75	140·36	Defective.	8·011	159·3	-	-	-	Nearly calm.
33·21	149·44	do.	8·029	158·8	-	-	-	Moderate breeze abeam.
34·91	154·4	- -	8·21	148·	-	-	-	Light breeze abeam.
41·27	157·19	- -	7·723	167·9	Dynamometer.			Experiments made for the purpose of *testing the effect of reduced surface.*
36·78	165·94	- -	7·787	173·51	-	-	-	This is the same screw as was tried on the 5th of June, to test the effect of *the fouling of the vessel since that date (three months).* The reduction of effect from the three months' fouling appears to be 8·029 − 7·787 = ·242.
Fore 22·04 / Aft 27·08	156·47	Dynamometer.	8·429	152·5	Defective.			Proportions prepared by Mr. Murray, approved by Mr. Wooderoft. Weather fine. Very light wind.
Fore 48·84 / Aft 37·8	148·99		6·785	262·34	-	-	-	Light breeze. This experiment was made to *test the effect of reversing Woodcroft's screw.*
Boss 26·9 / Cir. 33·76	152·24	- -	7·567	189·11	-	-	-	- -
Boss 18·49 / Cir. 34·79	166·36	- -	7·575	188·47	-	-	-	Light wind abeam. Experiments made to test the effect of *varying the rate of expanding pitch;* showing a gradual improvement as the rate of expansion increases from six inches to two feet.
Boss 22·35 / Cir. 40·39	169·5	- -	7·806	172·26	-	-	-	- -
39·43	144·2	92·41	7·786	173·54	1·56	51·79	35·31	Very strong wind nearly down the Reach: tide running down. In consequence of the state of the weather, it was determined that the screw should be tried again. See Trial of the 17th.
32·16	188·06	120·95	7·916	165·15	1·55	67·11	35·69	Light breeze abeam: tide running down. (From these four trials, made on the same day, it appears that the most favourable result among the screws of uniform pitch was with the 5 feet pitch and 4 foot length.
41·73	178·25	109·19	7·69	180·13	1·63	69·06	38·74	Stiff breeze nearly abeam, but rather down the Reach: tide running down.
39·73	177·73	109·62	7·766	174·89	1·62	68·06	38·29	Fresh wind abeam; tide running up.
37·67	168·38	105·4	7·741	178·7	1·6	62·98	37·4	Stiff breeze rather down the Reach: tide running up.
Boss 28·72 / Cir. 35·4	161·45	103·75	7·685	180·5	1·56	57·7	35·74	Stiff breeze nearly abeam, but rather down the Reach: tide running down.
Boss 20·22 / Cir. 37·78	189·11	104·56	7·603	186·44	1·81	84·55	44·71	Ditto, ditto, ditto.
Boss 14·87 / Cir. 42·41	174·56	147·94	7·852	169·24	1·48	56·62	32·44	Stiff breeze nearly down the Reach: tide running down. This screw, tried on the 18th Sept., is again tried on the 14th Oct. to test the effect of the fouling of the vessel's bottom since the previous trial, being nearly 1 month.*
Boss 14·66 / Cir. 41·97	186·33	148·51	7·617	185·31	1·57	67·82	36·4	Fresh breeze nearly abeam, but rather up the Reach: tide running up.

ference, Fore and Aft.

Boss 10·87 / Cir. Fore 31·13 / „ Aft 45·89	183·56	115·72	7·643 ·235 = 7·278	183·49 (*See Note.*)	1·59	67·84	36·96	Tide running up.

lowing trials in Long Reach. Ratio of multiplying power of Dynamometer 101·84 to 1.

36·53	208·11	88·36	7·737	176·91	2·36	119·75	57·5	Fresh breeze athwart, and rather down the Reach: tide running down. Experiment to test the comparative effects of the expanding pitch, and the compound expanding pitch; the results showing the superiority of the latter. This screw, tried on the 17th Sept. 1847,* is again tried for the purpose of connecting the following experiments with the foregoing.
Fore 36·5 / Aft 40·23	208·51	93·95	7·751	175·94	2·22	114·56	54·9	Fresh breeze athwart, and rather down the Reach: tide running down.
34·74	208·22	93·2	7·8	172·74	2·23	115·02	55·2	Stiff breeze abeam: tide running up. Tried for the purpose of testing the relative merits of the uniform pitch 5′ 6″, and Woodcroft's 5′ 4″ and 5′ 8″ pitch.
Boss 12·31 / Cir. 40·37	213·96	103·57	7·953	162·85	2·07	110·39	51·6	Ditto, ditto.
Boss 7·41 / Cir. Fore 28·46 / „ Aft 43·79	179·17	90·02	8·095	154·44	1·99	89·15	49·8	Fresh breeze abeam, and rather down the Reach: tide running down.
39·54	233·75	102·41	7·725	177·73	2·28	131·34	56·2	Light breeze nearly down the Reach: tide running down.
Fore 37·68 / Aft 41·35	224·89	109·28	7·769	174·74	2·06	115·61	51·4	Fresh breeze nearly down the Reach: tide running up. These screws, tried on the 30th June, are again tried for the purpose of verifying the preceding trials.
37·36	239·9	110·75	7·759	175·41	2·17	129·15	53·8	Fresh breeze down the Reach: ditto
Fore 24·57 / Aft 29·44	234·45	118·12	8·045	157·36	1·98	116·33	49·6	Stiff breeze down the Reach: tide running down. Tried for the purpose of testing the relative merits of the uniform pitch of five feet, and Woodcroft's increasing pitch of 4′ 10″ and 5′ 2″.
34·52	237·84	106·	7·719	176·09	2·24	131·84	55·4	Ditto, ditto, occasionally priming.
38·22	252·06	120·14	7·847	169·57	2·1	131·92	52·3	Light breeze nearly up the Reach: tide running up.
39·82	193·35	89·54	8·009	159·45	2·16	103·81	53·7	Ditto, ditto.
Fore 24· / Aft 28·81	193·31	96·61	8·112	153·46	2·	96·7	50·	Ditto, ditto. These screws, tried on the 1st inst., are again tried for the purpose of verification.

* The reduced effect appears to be 7·852 − 7·617 = ·235. This quantity, therefore (·235), being added to the effect produced by the compound expanding pitch, on the 14th Oct., will class the effect of this screw with the others tried on the 16th, 17th, and 18th September.

decrepancy is, that the ratio of gross indicator to dynamometer power is twice greater in experiments 5. to 8. than it is in experiments 21. to 24., — a result which is possible, if in the 2nd series of experiments the vessel had been set to tow another vessel, or had been compelled to encounter adverse seas or winds, but which could not take place in the case of a vessel set merely to repeat the same experiments, under identical circumstances, in smooth water. In the 3rd experiment the speed realized was nearly 9 knots, and this speed is represented as having been attained with a thrust upon the shaft of less than $1\frac{1}{2}$ tons. In the 21st experiment the speed realized was about $8\frac{1}{4}$ knots, and this speed is represented as having been attained with a thrust upon the shaft of about 2 tons. It is certain, however, that the largest thrust will give the largest speed, unless there be adverse circumstances of wind or water, which, if they existed, should have been specified, or rather those experiments should have been rejected altogether, when such adverse influences interefered with the result. Since, therefore, the indications of the dynamometer obtained by Mr. Murray cannot be trusted, the column in which a computation is given of the speed which would have been attained by the vessel if the power had been 160 horses, will afford the best guide to the relative efficiency of the screws employed.

SCREWS TRIED IN THE "MINX."

By the table of the results of experiments tried in the "Minx," with screws of a uniform pitch, with screws of a pitch increasing in the direction of the axis, with screws of a pitch increasing from the boss to the circumference, and with screws of a pitch increasing both in the direction of the length of the screw, and from the boss to the circumference at the same time, it will be seen that the best performance was obtained on the 9th of July, 1847, when the screw employed was a screw of uniform pitch. The highest speed of the vessel was obtained on the 1st of July, 1848, with a screw of an increasing pitch in the direction of the axis, and on the 12th of July with a screw of a uniform pitch; but both of these results were somewhat inferior to the previous one relatively with the power expended. In this table, as in the preceding one, there is an apparent disagreement between the results obtained from the indicator, and those obtained from the dynamometer. The two columns of the speed of the vessel, computed as if the power exerted had been 160 horses, and the gross horse power in the cylinders necessary to give a speed of 8 knots, are calculated on the supposition that the power necessary for propulsion varies as the cube of the speed; and these columns, therefore, constitute an expression of the efficiency of the vessel in each particular trial. But the ratio of the indicator to the dynamometer power also constitutes an expression of the efficiency, and these two quantities ought at the same speed to be proportional to one another. It will be seen, however, by a reference to the table, that while the power necessary to produce a given speed, or the speed resulting from a given power, as computed by the ordinary law, remains pretty uniform in all the experiments, the ratio of the indicator to the dynamometer power increases with

the speed; or in other words, with a given indicator power, less dynamometer power is produced as the speed of the vessel is increased. At the same time the apparent slip of the screw remains pretty nearly uniform, but there is more friction of the screw in the water at the higher speed.

SCREWS TRIED IN THE "PELICAN."

The experiments upon the French steam-vessel "Pelican" were made in the years 1847 and 1848, and their main object was to determine the relations which it is expedient to establish between the diameter, the pitch, the number of blades, and the length of a screw propeller. A subsequent series of experiments upon screws of larger diameter was made on board the same vessel in 1849, and the results then obtained corroborated those which had been arrived at in the previous trials. These several experiments were conducted by M. Bourgois, a lieutenant in the French navy, and M. Moll, naval engineer; and in 1850 a committee of the French Institute, composed of MM. Arago, Dupin, Poncelet, Duperrey, and Morin, examined and reported favourably upon the results which had been thus obtained.

The "Pelican" is a vessel of 120 nominal horses power, 131 feet long, 22 feet 4 inches wide, and the mean immerged midship section is $109\frac{3}{4}$ square feet. The displacement of the vessel during the experiments was 258 tons: she was trimmed somewhat by the stern to enable as large a screw as possible to be got in, but a screw of 8 feet $2\frac{1}{2}$ inches in diameter was the largest that could be introduced. The engines consist of two vertical oscillating cylinders, with the necessary supplementary apparatus. The diameter of cylinder is 44 inches, and the length stroke 37·8 inches. The expansion valves were so adjusted as to be capable of cutting off the steam at 0·08, 0·15, 0·30, 0·50, 0·70, and 0·80 of the stroke. The maximum pressure of the steam during the experiments did not exceed 15 lbs. on the square inch above the pressure of the atmosphere. The total weight of the machinery of the "Pelican," including water in the boilers, is 80 tons. The diameters of the screws tried were 8 feet $2\frac{1}{2}$ inches, 6 feet $10\frac{3}{4}$ inches, and 5 feet 6 inches; or more correctly, 98·4 inches, 80·7 inches, and 66·14 inches, forming, thus, a geometrical progression, of which the ratio is 1·22.

With the view of ascertaining the change of circumstances in propelling, produced either by the form of the vessel herself, the influence of head winds, or other causes which determine the facility or otherwise with which she passes through the water, a plane or flat surface was applied at the head of the vessel, which by being lowered into the water would retard the vessel to any extent that might be desired. The speed of the vessel was determined by ascertaining the time necessary to run through a distance of 2017 metres, or 6615·76 feet, properly marked out by posts along the shore; and three observers separately noted the times at which the posts were passed, and the mean of these observations was entered as representative of the actual speed. By comparing the speed of the vessel with

the number of revolutions of the screw, the advance of the vessel for each revolution of the screw became readily ascertainable, and the ratio of the excess of the pitch over this advance constitutes a quantity which MM. Bourgois and Moll have termed the co-efficient of slip. If the screw, instead of acting upon a fluid, worked in a stationary nut, the co-efficient of slip would become nothing; or if the screw were set into revolution when the vessel was at anchor, the co-efficient of slip would become equal to 1. If in like manner a screw vessel in trying to stem a very strong head wind was driven bodily backward, the advance would become negative, and the co-efficient of slip would become greater than unity. It is easy to conceive that the co-efficient of slip is a quantity which must exercise a marked influence upon the efficiency of the vessel; and MM. Bourgois and Moll, by taking the relative velocities for the abscissæ of a curve, and the co-efficients of slip for the ordinates, have shown that the co-efficient of slip increases with the relative velocity, and that consequently the advance diminishes in like manner with this velocity. On the other hand, if we call B^2 the immerged midship section of the vessel, V' the relative velocity of the vessel, or in other words the velocity of the vessel relatively with the water in which she swims, K a numerical co-efficient, of which the value will be hereafter specified, then the resistance R of the hull, will, according to the law of the resistance of fluids, be expressed by the equation $R = KB^2 V'^2$, and the power consumed per second will be represented by the equation $RV' = KB^2 V'^3$. If the power exerted by the engine as ascertained by the indicator be represented by T, then the ratio of the power consumed in propelling the vessel to the power exerted by the engine will be represented by the expression $\frac{KB^2 V'^3}{T}$. This quantity, which MM. Bourgois and Moll designate by the term *utilization*, is tantamount to that given under the head of $\frac{\text{Speed}^3 \times \text{sect. area}}{\text{Indicated power}}$, in the table of the performance of the steam vessels in the British navy, at page iii. of the Appendix, and it is an expression of the efficiency with which the vessel works, whether resulting from the form of the hull or the form of the propeller. The larger this quantity is the more efficient is the vessel; and in designing steam vessels of every kind, the object which has to be attained is to make this quantity as large as possible.

In the experiments made with the screw of 66·14 inches diameter, pitches were tried of 76·18 inches, 92·95 inches, 113·38 inches, 128·3 inches, and 159·7 inches, and with each of these pitches screws were tried of a length answering to the following fragments of the pitch 0·300, 0·375, 0·450, 0·600, and 0·750, making in all thirty series of experiments for this one diameter. To make the results accruing from these experiments more readily intelligible, they were laid down in a curve, in which the pitches were taken for abscissæ, and the co-efficients of slip for ordinates. This comparison was made both in the case of the experiments performed when the resistance of the hull was aggravated by the plane immerged in the water at the bow, and in the case of the hull when unobstructed by this addition; and two series of curves were thus obtained, which showed very clearly that the co-efficient of slip diminished with the pitch, and diminished also as the fraction of the pitch increased. In other words, it was thus made plain, what indeed had been known before, that

there was less slip with a fine pitch than with a coarse one, and less also when the screw was tolerably long than when it was very short. The amount of slip, however, is not the only question to be considered in such a case, for the increased friction produced by the expedients which diminish slip may more than compensate for the advantage gained; and in another series of curves, in which the areas of the indicator diagrams were taken as the ordinates, the pitches being still the abscissæ, it was found that the performance increased, both as the pitch diminished and as the fraction of the pitch diminished. To such diminution, however, there is obviously a limit; and from the two preceding series of curves a third series was compounded, which pointed out under what circumstances the efficiency became a maximum, or, in other words, what the conditions were which united the largest speed of the vessel with the least consumption of coal. A more full development of these circumstances will be found in the citations from the Memoir of MM. Bourgois and Moll, which I shall presently give, and in the tables of results of the experiments made on board the "Pelican," given in the Appendix.

It appears from these, in common with other experiments upon the screw, that the slip increases the more the immerged area of the midship section exceeds that of the screw's disc. With a given midship section it is therefore advisable to make the screw as large in diameter as possible. The slip also increases with the velocity of the screw's rotation, and with the speed which it is necessary that the vessel should maintain; for a sharp and shallow vessel requires the same thrust upon the screw shaft for the accomplishment of a high speed that a deep and heavy vessel requires for the accomplishment of a low speed, and a small swift vessel, therefore, ought to have a screw of the same dimensions as a large and slow vessel, if it be required that it shall have only the same amount of slip. Screws with two blades have a larger slip than screws of four blades constructed of the same length in the direction of the axis and of the same pitch, and screws of six blades have about the same amount of slip as screws with four blades. As regards the mere question of slip, therefore, the screws with four blades appeared to be preferable to those with two blades, but as regards efficiency the screws with two blades appear to be equally effective. The increased slip with a screw of two blades appears to be compensated by its diminished friction.

In employing screws of a larger and larger diameter relatively with the immerged area of midship section, the following consequences are found to ensue: — 1st. The efficiency of the engine power in propelling the ship increases. 2nd. The ratio of the pitch to the diameter, which produces a maximum effect, goes on increasing. 3rd. It becomes proper to employ smaller and smaller fractions of the screw or of the total pitch. Thus in the case of the "Pelican," when fitted with screws of four blades, and of the diameters of 98·42 inches and 54 inches, the results have been found to be in the ratio of 1 to ·823. The most advantageous ratio of the pitch to the diameter was found to be 2·2 in the case of the large screw, and 1·384 in the case of the small. Finally, the fraction of the pitch found to be most advantageous was ·281 in the case of the large screw, and ·450 in the case of the

small screw. These results show that there are no absolute proportions of screw which are properly applicable to all vessels alike, but that the proportions and configuration must vary with the form of the vessel, with the draught of water, and with the amount of the engine power employed. Screws of two blades, in order that they may realize the same results as screws of four blades, should have a finer pitch, and screws of six blades appear to act very efficiently in the case of large diameters. According to these conditions, a vessel being given, and the area of the midship section being known, so that the limit of the screw's diameter—when taken as large as possible—is determined, the ratio of the square of the screw's diameter to the area of midship section becomes at once ascertainable. Multiplying this ratio by the co-efficient κ of the resistance of hull, and which MM. Bourgois and Moll take at the mean value of 6 kilogrammes, or 13·23 lbs. avoirdupois, per square metre of immerged section, they obtain a product which they term the *Relative Resistance*, and putting for abscissæ the values of this quantity in the case of the "Pelican," and successively for ordinates the fractions of the pitch and the values of the ratio of the pitch to the diameter corresponding to the maximum performance, they have constructed curves from which they have deduced, for values equidistant from the quantity which they have termed the relative resistance, the fraction of the pitch which should be employed, and also the proper proportion of the pitch to the diameter, in the case of screws with two, with four, and with six blades. They have next proceeded to classify the different vessels of the French navy, according to the ratio of the area of the immerged midship section to the square of the diameter of the screw, and they have thence deduced the value of the relative resistance for those vessels, and have shown how to determine the pitch, and the fraction of the pitch, proper to be employed in each particular case. For war vessels, which require to be capable of proceeding either under sails or under steam, they recommend the use of screws of two blades, — mainly in consequence of the facility with which such screws can be shipped and unshipped; but in the case of merchant vessels with auxiliary power, they recommend that the screw shall be made merely capable of revolving freely when disengaged from the engine, in the manner of a patent log. A screw thus fitted will, they say, offer scarcely any obstruction to the progress of the vessel under sail, while it will possess advantages in strength and simplicity, such as would not be otherwise attained.

MEMOIR RESPECTING THE EXPERIMENTS MADE IN THE "PELICAN."

The experiments performed with different screws on board the "Pelican," in 1847 and 1848, were made the subject of a Memoir by MM. Bourgois and Moll, describing the manner in which the experiments had been conducted, and discussing fully the nature of the results which had been obtained. This Memoir extended to 320 folio pages; but as it was difficult in so voluminous a document to discover those practical facts and conclusions which are alone interesting to the practical engineer, the French minister of marine invited

the authors of the Memoir to draw up a *résumé* of its more important contents, such as it would be proper to place in the hands of the engineers at the different French sea ports, to put them in possession of the most important points of information which these experiments had elicited. Accordingly, a new Memoir was prepared, of a character answerable to these intentions; and the conclusions put forth in this Memoir were verified by comparing them with the conclusions derived from a subsequent set of experiments upon screws of large diameter made in 1849. Even the abridged Memoir is a very bulky document, and it is often needlessly diffuse and transcendental; but it constitutes one of the most elaborate investigations of the action of the screw which has yet appeared, and upon the whole I consider it a safe and useful guide in practice. As this Report has not been printed, it is quite unknown in this country; and it will be useful therefore to recapitulate here, such of its leading topics of information, as may be available for the more complete elucidation of the subject.

The experiments made upon the "Pelican," had for their object the determination of the specific efficiency of all kinds of screw propellers in vessels of every size, proceeding at every speed, and under all circumstances of wind and sea, to the end that the particular species of propeller most proper for a given vessel might be readily specified. It was also a leading object to determine the value of the revolving force, or revolving stroke, that it was necessary to bring to act upon the screw-shaft to make the screw perform a determinate number of revolutions in a given time, supposing, of course, that the form of the vessel was known as well as the dimensions and form of the propeller; or rather, having once determined the law of the revolving stroke in functions of the number of revolutions, to assign the value of the elementary revolving stroke, that is to say, of the power consumed in a single revolution per unit of time, and the solution of this double problem evidently involves the elucidation of the question in all its generality.

By the term utilization, or efficiency, is meant the ratio of useful effect to the power transmitted by the engine to the screw-shaft, or in other words, it is the ratio of the engine power to the aggregate resistance, multiplied by the distance through which the vessel passes. This, therefore, is the same as the ratio of the indicator power to the dynamometer power. The value of this ratio, as has been seen by the experiments made with vessels to which a dynamometer has been applied, depends not merely on the proportions of the screw, but also on the size and form of the vessel, and upon the action of the winds and sea. Now the proportions of a screw have reference to the diamater, the form of the generatrix, the pitch, whether variable or constant, the fraction of the pitch or length in the direction of the axis, and the number of arms or blades of which the screw is composed. The efficiency, therefore, or what is the same thing, with any given indicator power the amount of the dynamometer power, is a very complex function of the diameter of the propeller, of the form of the generatrix, of the nature or the amount of the pitch, of the length in the direction of the axis, and of the number of blades of the propeller, and also of the resistance experienced by the hull at different speeds, of the immerged form of the stern,

and finally of the velocity of the vessel, or of the number of revolutions made in a given time by the propeller.

The results arrived at by the experiments made with the "Pelican" are susceptible of application in the case of all vessels of similar form, but of larger or smaller size, if the precaution be taken to make the velocities adopted as answering to one another, vary as the square roots of the linear dimensions of the vessels. When the vessels are not of similar forms this law will not apply, and it will be necessary in such a case to employ a co-efficient which may be considered as equivalent among other like or similar elements. To determine this quantity it will not be always necessary to establish a suitable ratio between the speeds of two dissimilar vessels, but in the greater number of cases it will suffice to establish between the linear dimensions of their respective screws a ratio, which shall be equal to the square root of the ratio of their elementary resistances. By elementary resistances are meant the resistances of the two hulls per unit of speed both brought into relation to the respective speeds of the two hulls; and in order to make the laws, ascertained to exist in the case of the "Pelican," applicable to any vessel of a different form, it is only necessary that in both vessels the ratio of the elementary resistance of the hull, to the area of the screw's disc, or the square of the screw's diameter, should be the same. It is obvious that if a vessel be propelled with twice the difficulty, she should have twice the propelling area in the screw's disc, or in the square of the screw's diameter, if the same velocity has to be maintained; and the elementary resistance of the hull is merely an expression of the ease or difficulty with which the vessel is propelled.

The ratio of the square of the diameter of the screw to the elementary resistance of the hull, gives the relative resistance of the screw and hull, and this is a quantity which enters largely into the subsequent investigations, and the precise nature of which it is necessary to apprehend. If a vessel of a given form, and with a given number of square feet of immerged section, be propelled through the water at a given speed, there will be a certain resistance per square foot of immerse section, which is ascertainable. A blunter vessel, if driven by the same power, at the same speed, must have a less immersed section; she will, therefore, present more resistance per square foot of immersed section, while a sharper vessel will present less. If, therefore, these several vessels be driven at the same speed, with the same power, and with the same screw, then as the screw exerts the same pressure or thrust in each case, and remains unchanged in diameter, the ratio of the square of the screw's diameter to the total area of immersed section must be different in each of the vessels, and this ratio is indicative of the relative resistance of the screw and ship. The thrust of the screw will always be just balanced by the resistance of the ship.

Taking the immerged midship section of the "Pelican" at 109¾ square feet, or more correctly, at 109·69 square feet—which immersion appears to have been maintained throughout the experiments with little variation,—and the diameters of the screws tried, at 66·14 inches, 80·7 inches, and 98·4 inches, or 5·51 feet, 6·726 feet, and 8·2 feet, with the common geometrical ratio of 1·22, then the different relative resistances corresponding to the series

of diameters will be expressed by $K \times \frac{109{\cdot}69}{(5{\cdot}51)^2}$, $K \times \frac{109{\cdot}69}{(5{\cdot}51)^2\,(1{\cdot}22)^2}$, $K \times \frac{109{\cdot}69}{(5{\cdot}51)^2\,(1{\cdot}22)^4}$, if the measurements be made in feet, — K being the value of the resistance of a square foot of immersed section of the vessel at a speed of one mètre, or 3·2808 feet, per second. If, however, the measurements are taken in mètres, then, as the immersed section is 10·20 square mètres, and the diameters of the screws 1·680 mètres, 2·050 mètres, and 2·50 mètres respectively, the expression becomes $K \times \frac{10{\cdot}20}{(1{\cdot}68)^2}$, $K \times \frac{10{\cdot}20}{(1{\cdot}68)^2(1{\cdot}22)^2}$, $K \times \frac{10{\cdot}20}{(1{\cdot}68)^2(1{\cdot}22)^4}$, K being the resistance of a square mètre of immersed section of the vessel at a speed of one mètre per second. It is obvious from these figures that the relative resistances are as the numbers $(1{\cdot}22)^4$, $(1{\cdot}22)^2$, and 1, or as 2·21533456, 1·4884, and 1·000; or, say, as 2·215, 1·488, and 1·000. The use of a retarding plane let down into the water at the bow of the vessel enabled the relative resistance to be extended to 3·323, a value corresponding to an imaginary diameter of screw of 4·5 feet, or 1·372 mètres, supposing the screw to be applied to the simple hull; and although the results obtained with this retarding plane have not the same authority as analogous results obtained with actual vessels of a blunter form, yet they afford approximations of sufficient accuracy to be of much utility in practice. The pitches tried were 6·348 feet, 7·746 feet, 9·449 feet, 11·525 feet, 17·156 feet, and 20·935 feet, having the common ratio 1·22, as in the case of the diameters. If the measurements be taken in mètres, the pitches will become 1·935 mètres, 2·361 mètres, 2·880 mètres, 3·513 mètres, 5·229 mètres, and 6·381 mètres.

The efficiency being the ratio of the useful effect to the amount of engine-power transmitted to the screw, and the useful effect being nothing more than the resistance of the vessel multiplied by the space through which she passes, or, in other words, being just the dynamometer power, it is easy, when the engine and dynamometer powers are known, to tell what the efficiency is, whatever may be the speed of the vessel. If we knew with precision the law of the increase in the resistance which a vessel experiences when her speed is increased, we should be able, by knowing the resistance at any one speed, to tell what it would be at any other, and also what would be the useful effect at that increased speed. Thus if it were the fact that the resistance increased as the square of the velocity, then a constant elementary resistance multiplied by the cube of the speed would give the useful effect at the increased velocity; and for speeds differing but little from one another this mode of computation may be adopted. In the case of dissimilar speeds, however, such a method of estimation will give fallacious results, since it is known that the resistance of vessels increases more rapidly than the square of the velocity in the case of considerable speeds. Thus, when the speed of the "Pelican" was increased from $6\frac{1}{2}$ to $9\frac{1}{2}$ knots per hour, or about one-third, the resistance rose, not as the square, but as the 2·28th power; so that, calling B^2 the immerged section of the vessel, V the velocity of headway, and K the resistance of a square foot of immerged section at the speed V, it will only be permissible to take the expression $KB^2\,V^3$ as representative of the resistance, on the understanding that K varies in functions of the speed according to the approximate law $K = K' \times V^{0{\cdot}28}$, where K′

is a constant co-efficient. In the following investigations it will not be necessary to adopt this notation, the formula $KB^2 V^3$ having the advantage of superior simplicity, and being, moreover, sufficiently exact in the case of similar speeds. But in the case of speeds of a different order, it is necessary to understand that the ordinary formula does not give exact results; and when employed in connexion with such speeds, therefore, a correction of the nature here indicated must be applied.

If we put h to denote the pitch of the screw, ρ the co-efficient of recoil or of slip, and n the number of revolutions of the screw in a unit of time, then the expression $KB^2 V^3$ may, it is clear, be put under the form $KB^2 (1-\rho)^3 h^3 n^3$, or under the form $KB^2 a^3 n^3$, supposing a be understood to represent the distance through which the vessel is advanced through the water by each revolution of the propeller. The area of the immersed midship section B^2 is readily ascertainable when the draught of water is known; and the advance a, the co-efficient of slip ρ, the speed of the vessel through the water V, and the number of revolutions n, are all to be determined by experiment. As regards the co-efficient K, its value for different speeds was fixed approximately, in the case of the "Pelican," by the aid of experiments directed to that object; but its value in functions of the speed is also deducible from the slip, and the efficiency or ratio of the dynamometer to the indicator power.

By the absolute speed of the vessel is meant the speed over the ground, determined by dividing the length of each run by the time of its duration. From the absolute speed the relative speed, or speed through the water, may be derived, by adding or subtracting the velocity of the current; and as this speed raised to the third power enters into the formula which expresses the efficiency of a propeller, it is highly important that it should be accurately determined, since any error which exists in the determination of this element will be multiplied by the subsequent operations. The precautions taken to ensure accuracy in determining the speed of the "Pelican" have been already related. Most of the experiments were made in the Roads of Minden, between the towers of Scee and Brillantes, proper lines of posts being erected upon the left bank of the Loire to fix the distances with exactitude, and the length of the run was generally either $1016\frac{1}{2}$ metres or double that distance. The usual course of procedure was to make four runs with the whole power of the engines acting so as to give the full speed; four runs with only one boiler in operation, so as to produce a reduced or medium speed; four runs with only one boiler and with the steam throttled, or rather worked with much expansion, so as to produce a low speed; and four runs with one boiler, and with the engines using all the steam which that boiler produced, but with a board or plane of 13·988 square feet, or 1·30 square mètres, lowered into the water at the bow, and fixed across the stem, so as purposely to increase the resistance of the vessel. The mean values of the speeds thus obtained were, with the simple hull, 9·5, 7·7, and 6·5 knots; and if N be the number of strokes made by the engine during the run, t the duration of the run in seconds, and r the ratio of the gearing wheels, then the number of revolutions n made by the screw in a second will be represented by the formula $n = \frac{Nr}{t}$. To determine the speed of the vessel through the water from the speed over

the ground, the vessel was successively tried with and against the current; and if a be the advance of the screw through the water made by each revolution, then it is clear that the value of this quantity will remain unchanged, or nearly so, whether the vessel proceeds with the current or against it, so long as there is an absence of wind. Putting then U, U + α, and U + 2α to represent the mean speeds of the current during each succeeding run, and n, n' and n'', the corresponding number of revolutions of the screw per second, then $n\,a$, $n'\,a$, and $n''\,a$ will represent the speed of the vessel through the water during each of the runs in question; and if we designate the absolute speed, or the speed over the ground in each of the runs by v, v', and v'', we shall have $v = n\,a \pm \mathrm{U}$, $v' = n'\,a \pm \mathrm{U} \pm \alpha$, and $v'' = n''\,a \pm \mathrm{U} \pm 2\alpha$. We hence find the value of a to be expressed by the equation $a = \frac{v + 2v' + v''}{n + 2n' + n''}$; and when the distance that the screw advances through the water by each revolution is known, it is easy to tell the speed of the vessel through the water per second or per hour, by multiplying the advance by the number of revolutions per second or per hour made by the screw.

These conclusions are only quite accurate under the supposition that the vessel is sailing in a perfect calm; but vessels are generally more or less affected in their speed by the influence of the wind, and this influence will not be properly eliminated in an experimental trial by running the vessel first before the wind and then against it, nor will it often happen that the current and the wind proceed in the same direction. M. M. Bourgois and Moll made some experiments in the "Pelican," to determine the effect of winds of different strengths upon the progress of the vessel, and also upon the co-efficient of slip; and by the aid of these experiments, they have constructed a table which gives the corrections, in functions of the speed, proper to be applied to the co-efficient of slip in the case of vessels proceeding at full speed and aided or opposed by winds of different strengths. These corrections are as follows: With the wind on end, or at two points of deviation from that direction, the correction proper for a strong breeze is ·024, for a pretty strong breeze ·021, for a light breeze ·018, for a gentle or feeble breeze ·012, and for light airs ·006. With the wind at six points of deviation from the course of the vessel, the corrections are just half the foregoing; and for a deviation of four points, the corrections are intermediate between the other two. It would have been more useful, however, to have given the corrections proper to be applied for each velocity of the wind, and for each foot of surface exposed to it.

Besides the corrections which have reference to the influence of the wind, there are two others to be taken into account, and they relate to the immersion and speed of the vessel. The mean draught of water of 8·2 feet, or 2·5 mètres, which corresponds with an immerged section of 109·79 square feet, or 10·2 square mètres, having been adopted as the normal immersion of the "Pelican" during the experiments, it is obviously necessary that any deviation from that draught should have a suitable allowance made for it in determining the final results. In proportion as the coals of a steam vessel are consumed, the vessel will be lightened, or her immersion will become less; but in the experiments with the "Pelican,"

this deranging influence was in a great measure counteracted by admitting water into the hold. Nevertheless, there was some variation in the draught, which, however, did not exceed 3 centimètres, or 1·18 inches; and two experiments, made with different immersions, on the 29th of August and the 3rd of September, indicated the influence which the immersion had upon the slip, and consequently fixed the limit of the influence which a difference in the immersion of 1·18 inches could exert. This influence ought to be nearly the same for all screws of the same diameter; and a correction of ·015 per decimètre or per 3·93708 inches of immersion, has been adopted as a proper allowance for variations of immersion in the case of high or full speeds. As regards the trim of the vessel, or the difference of draught at the bow and stern, the vessel has been very generally trimmed ·7 metres, or 2·296 feet by the stern; and two experiments made on the 18th and 20th of November, with the resisting plane, and at the medium speed, showed that no sensible difference in the speed resulted from altering the trim to the extent of 20 centimètres, or 7·87 inches.

From the general tenor of the experiments upon the "Pelican," it appears that with every kind of screw, the difference in calm weather between the co-efficients of slip at speeds of 9·5 knots and 6·5 knots does not exceed 0·03. A correction, therefore, of 0·01 per knot, in the case of such speeds as 9·5 knots per hour—which is adopted as the normal full speed in these experiments—will be a near approximation to the truth; and taking the co-efficients of slip as indicated in the tables, in the case of the experiments made at full speed, and in the case also of those made with the resisting plane, the several corrections proper for the force of the wind, the immersion, and the speed have been applied to them, and curves have been drawn for each of the series of screws of the same diameter, the same number of blades, and the same fraction of pitch, — the pitches being taken for abscissæ, and the co-efficients of slip for ordinates, as already intimated at page 140. In all operations of this kind there will be some of the points derived from the experiments which will fall a little within or without the curves, owing to accidental causes of disturbance, or perhaps to errors of observation; but the general law of the progression can be ascertained by curves drawn in the manner described, with sufficient accuracy for the wants of practice.

It has been already explained that the co-efficient of slip is the ratio of the diminished pitch of the advance of the screw to the entire pitch, or, in other words, it is the ratio of the progress of the vessel to that of the screw, supposing the screw to work in a solid nut so as to have no slip. It has also been explained that the results of the experiments made upon the "Pelican" are applicable to vessels of very different dimensions, but at speeds varying as the square root of the linear dimensions. The slip is the same in the case of all vessels of similar forms, and which have similar screws, and a resistance of hull proportional to the squares of the diameters of the several screws. By similar screws is meant screws which have the same number of blades, the same fraction of pitch, and the same ratio of the pitch to the diameter; and similar forms of hull and similar screws are merely

hulls and screws constructed on a different scale from the original, but in all other respects the same. Taking B^2 as the immersed midship section of the vessel, and D as the diameter of the screw, then $\frac{B^2}{D^2}$ will express the ratio of the immersed section to the square of the screw's diameter. Substituting for this expression the letter b, then Kb will represent the ratio between the resistance of the hull per unit of speed and the square of the screw's diameter; or, in other words, it will represent the relative resistance already referred to at page 142. Putting R for the resistance of the hull at the speed under consideration, then K being the co-efficient of the resistance of the hull, we have $K = \frac{R}{B^2 V^2}$. But K, according to the experiments upon the resistance already recited, varies slightly with the speed, and therefore putting $Kb = \frac{K B^2}{D^2}$ for the same screw, it is clear that the quantity Kb, and the slip which answers thereto, will vary also, and will, in fact, increase with the speed. The amount of increase, however, is not considerable, and is scarcely appreciable in speeds under 7 knots; and it appears probable that the increased proportion of slip at high speeds is due altogether to the increase in the resistance beyond that which the common law supposes, or, in other words, to the increase in the exponent of the speed which answers to the resistance in the case of high speeds. Thus, while with the simple hull the difference in the slip at a speed of 6·5 knots, and at a speed of 9·5 knots is 0·03, as has already been explained, the difference in the slip, if the comparison be made between the simple hull and the hull with the resisting plane, is, with equal speeds, from 0·10 to 0·11; and this quantity varies but little with the pitch of the screw. Bearing then in mind that the resisting plane occasions an increase of resistance of ·5, while the vessel passes from the speed of 6·5 knots to 9·5 knots, we may discover by interpolation the ratio of the increase of the co-efficient of resistance which shall produce an increased slip of 0·03, and that ratio we shall find to be 1·11. If then we call V′ the high speed of the vessel, and V the low speed, and R′ and R the respective resistances of the hull, we have $R = K B^2 V^2$ and $R' = 1{\cdot}11\ K B^2 V'^2$. But $1{\cdot}11 = \left(\frac{V'}{V}\right)^{0{\cdot}28}$ from whence it would appear, that while the vessel passes from the low speed to the high speed, the resistance varies as the 2·28th power of the speed. This result, deduced from the experiments upon the "Pelican," presents also a satisfactory agreement with the results of experiments made upon a smaller boat, when brought into relation to the speeds corresponding to the difference of dimensions.

In looking over the tables in which are collected the co-ordinates of the curves of slip, it is easy, by arranging in one group those which refer to screws of four blades, and having the same pitch, but different fractions of the pitch, or, in other words, different lengths in the direction of the axis, to see the direction in which the slip varies in functions of the fraction of the pitch. Very short screws occasion more slip than screws of a greater length; and it would be easy to express the law of the variation by a curve, having the fraction of the pitch for abscissa, and the slip for ordinate. For present purposes, however, it will be sufficient to indicate the nature of the general law; and the experiments show

that between the fractions of ·30 and ·75 of the pitch, or three tenths and three quarters of a complete convolution of the helix, there is a difference of slip of ·05 or ·06 in the case of screws with a pitch of 4·285 mètres, or 14·058 feet, though this difference decreases in the case of screws of both a less and a greater pitch. The rate in the diminution of the slip from increased length becomes very slow, moreover, before the proportion of three-fourths of a convolution has been attained; and after that point the diminution becomes inappreciable, and does not compensate for the increased friction. On the other hand, by progressively diminishing the fraction of the pitch, the slip will be made greater and greater; and the curve which expresses the law of the variation of the slip in functions of the fraction of the pitch, will consequently have for its asymptote the right line of which the equation would be y or $\rho = 1$.

The manner in which, with a given length of screw, the slip varies in functions of the pitch can also be readily ascertained by an inspection of the tables of co-ordinates, which have the pitches for abscissæ and the co-efficients of slip for ordinates. Here, too, the curves, which represent the law of variation, will have for a symptote the right line of which the equation is $y = 1$, for if the pitch be supposed infinitely great, the advance will be O, and the co-efficient of slip will be equal to 1. It appears very clearly, from the curves which represent the general law, that, as the pitch of the screw is increased, there is an increase of slip corresponding to the increase of pitch, and this result ensues whatever fraction of the pitch is employed. Thus, by referring to the tables, it will be seen that with the screw of four blades the slip increases from ·305 for every increase of the pitch from 1·935 mètres to 6·381 metres. Within the limits of the experiments the differences of slip appear to increase in arithmetical progression, while the pitches increase in geometrical progression; and in prolonging the curves, so as to include pitches, which are four times greater than the diameter, this empirical law appears still to hold good.

It will not be difficult to investigate a formula, by the aid of which curves may be drawn which shall coincide, within the limits of the experiments, with the curves which have the pitches for abscissæ and the co-efficients of slip for ordinates. Thus h being one of the pitches experimented upon, M the ratio 1·22 of the geometrical progression of the pitches, G the slip of the screw which has the pitch h', Δ the variation of slip of two consecutive pitches of the series, x the pitch which follows h', and y the corresponding slip; then $x = h' \, M^z$, and $y = G + \Delta Z$, whence we get $y = G + \Delta \left(\frac{lx - lh'}{lM}\right) = G - \frac{\Delta \, lh'}{lM} + \frac{\Delta \, lx}{lM}$. As we have for a fraction of the pitch of, say, for example, ·45, $h' = 1{\cdot}935$, $M = 1{\cdot}22$, $G = 0{\cdot}220$, $\Delta = 0{\cdot}48$, if we substitute these values, and if at the same time we replace the pitch x by D e, e being the ratio of the pitch to the diameter D, the formula becomes $\rho = 0{\cdot}1858 + 0{\cdot}555 \log e$; and under this form it is applicable, under the limitations already indicated, to all screws of four blades and of ·45 of the total pitch,—the relative resistance of the vessel being at the same time similar to that obtaining in the case supposed. It would be easy to express the slip in functions of the pitch with any other frac-

tions of the pitch which might be assigned. The differences would be almost identical, and the value of e having alone changed, the slip would become, with a fraction of ·75 of the pitch, $0{\cdot}1580 + 0{\cdot}555 \log e$; with a fraction of ·60 of the pitch, the slip would be $0{\cdot}1720 + 0{\cdot}555 \log e$; with a fraction of ·375 of the pitch, the slip would become $0{\cdot}2000 + 0{\cdot}555 \log e$, and with a fraction of the pitch of ·300, the slip would become $0{\cdot}214 + 0{\cdot}555 \log e$.

The experiments made in the "Pelican" upon screws of two blades, though not so numerous as those made upon screws of four blades, were nevertheless sufficient to show that, in this case also, the slip increases in arithmetical progression as the pitch is increased in geometrical progression. A screw with two blades has a little more slip than a screw of four blades having the same diameter, length, and pitch; and the inequality increases slightly with the pitch. In the case of screws with two blades, the slip will be expressed in functions of the pitch when the fraction of the pitch is ·45, by $0{\cdot}2378 - 0{\cdot}166 + 0{\cdot}0566 \log e$, or $0{\cdot}0718 + 0{\cdot}0566 \log e$; and when the fraction of the pitch is ·30, the slip will be expressed in functions of the pitch by $0{\cdot}0800 + 0{\cdot}0566 \log e$. These expressions indicate that with pitches smaller than those employed in the experiments, screws with two blades would have less slip than screws with four blades; and the difference may be imputed to the inferior resistance which screws of two blades encounter at the cutting edges of the blades. The screws of six blades which were tried in the "Pelican" were not very favourable specimens of that species of screw, as the cutting edges, being thick, encountered considerable resistance in passing through the water. Upon the whole, however, it was found that a relation similar to that subsisting between screws of two and of four blades subsists also between screws of four and of six blades. A screw of two blades was also tried which had an increasing pitch at the entrance for one fourth of the length, the remaining three-fourths of the screw being formed with a uniform pitch; but the slip with this species of screw was found to be as great as with the common screw, the slip being measured by the pitch of the posterior portion. The efficiency, nevertheless, of screws with an increasing pitch, was found to be somewhat greater than that of screws of a uniform pitch, or, in other words, the result was better relatively with the power consumed.

It now remains to make some remarks upon the variations in the resistance of the vessel, and in the diameter of the screw; and, from the considerations already exhibited, it will be obvious that it will suffice to consider one of these quantities, since similar screws have the same amount of slip with the same relative resistance, and since an increase in the resistance of the hull has the same influence upon the slip as a diminution in the diameter of the screw. If, therefore, we wish to compare experiments made with different resistances of hull, and different diameters of screw, but with the same ratio of the pitch to the diameter, we must first reduce these experiments to an equivalent series having the same diameters of screw in each case, or the same resistance of hull, so that the results may become readily comparable. To ascertain the law of the variation in the slip, either

in functions of the absolute resistance, or of the square of the screw's diameter, or, what is more simple, in functions of the relative resistance of the hull, it is necessary to select screws having the same number of blades, the same fraction of pitch, and the same ratio of the pitch to the diameter, and to trace a curve with the relative resistances for abscissæ, and the co-efficients of slip for ordinates; or the law of the variation may be expressed by a formula, which will, in fact, be the equation of the curve in question. If we take, for example, the screws of four blades with a fraction of the pitch of ·375, with the ratio of the pitch to the diameter equal to 2·55, and with the several diameters of 5·51 feet, 6·726 feet, and 8·2 feet, or 1·68, 2·05, and 2·50 mètres, then the relative resistances will have the respective values of $K \times 3{\cdot}643$, $K \times 2{\cdot}446$, and $K \times 1{\cdot}644$. The respective co-efficients of slip for these screws were found experimentally to be 0·4304, 0·348, and 0·292, at a speed of 9·5 knots; so that the differences between the co-efficients of slip are proportional to the differences between the relative resistances; and we may translate this empirical law by the equation $\rho = 0{\cdot}178 + 0{\cdot}0693 \times b$, which, in the case of the screws referred to, expresses the co-efficient of slip in terms of the relative resistance, and of a quantity depending on the proportions of the screw.

In seeking, by means of this equation, to determine the relative resistance answering to a slip of ·455, which was the slip found to obtain when the "Pelican" towed the ship "Fabert," when corrected for the influence of the wind, we find its value to be $K \times 0{\cdot}400$; and we find 2·433 to be the ratio of the total resistance of the two hulls, at a speed of 7·3 knots, to the resistance of the simple hull of the "Pelican," at her normal draught of water, and at a speed of 9·5 knots. The resistance of the "Fabert" having been found, by one of Regnier's dynamometers, to be 159·347 lbs. or 72·25 kilogrammes per unit of speed, we easily get the value of the co-efficient of the resistance of the "Pelican" for a speed of 7·3 knots, in resolving the equation $\overset{kos}{72{\cdot}25} \times \overset{m}{K'} (11{\cdot}55)^2 = 2{\cdot}433\ (\overset{m}{K'} \times 10{\cdot}28)$. Here 11·55 is the immerged section of the "Pelican," in square mètres, when towing the "Fabert;" and a mètre being 3·2808 feet, a square mètre is 10·764 square feet. By this equation we find $K' = \overset{kos}{5{\cdot}367}$, or, say, $\overset{kos}{5{\cdot}4} = 11{\cdot}9097$ lbs. The results obtained with the screws of the diameter of 5·51 feet, or 1·68 mètres, may be expressed by means of the equation $\rho = 0{\cdot}164 - 0{\cdot}14 \log. m' - 0{\cdot}14 \log. \frac{m'}{m} (\alpha\ {\cdot}625 - e\ {\cdot}115 \log. m') \log. e$, where e represents the ratio of the pitch to the diameter, $\frac{m'}{m}$ the fraction of the pitch, and m' the number of blades. For screws of 5·51 feet or 1·68 mètres in diameter, or for a relative resistance of 3·643, we have $\rho = 0{\cdot}14 - 0{\cdot}14 \log. \frac{m'}{m} + 0{\cdot}555 \log. e$; and for the large diameter, or for the relative resistance, $K \times 1{\cdot}644$, the expression becomes $\rho = 0{\cdot}163 - 0{\cdot}225 \log. \frac{m'}{m} + {\cdot}64 \log. e$. The results obtained in the experiments of 1848 with screws of 5·51 feet, or 1·68 mètres in diameter, are represented by the following formula:—

$\rho = \frac{e^{1\cdot15}\, b^{0\cdot85}}{e^{1\cdot15}\, b^{0\cdot85} + c}$; where c is a constant quantity depending on the fraction of the pitch and number of blades. The different values of this constant, and also the logarithms of its values, are exhibited in the following table: —

	Fraction of the Pitch.	Value of c.	Value of the Logarithm of c.
Screws with Two Blades	0·300	9·743	0·988589
	0·450	11·007	1·041659
Screws with Four Blades	0·300	10·714	1·029952
	0·375	11·600	1·064458
	0·450	12·280	1·089198
	0·600	13·027	1·114844
	0·750	13·453	1·128819
Screws with Six Blades	0·600	13·042	1·115356

In applying the formula $\rho = \frac{e^{1.15}\, b^{0.85}}{e^{1.15}\, b^{0.85} + c}$ to a vessel other than the Pelican, it is necessary to consider b as expressing not the precise ratio of the immersed transverse section to the square of the screw's diameter, but rather the ratio of $B'^2 \times \frac{K''}{K}$ to the square of the screw's diameter, B'^2 being the immerged section, and K'' and K the resistances per square mètre of immerged section of the new vessel and of the Pelican per mètre of speed per second, both brought into relation to the speeds of the two vessels. Since, however, the slip is sometimes negative, the above formula should be modified by adding to the numerator a negative term as a function of the relative resistance, and which would have a very small value with all screws of the ordinary proportions. The logarithmic formula leads to the conclusion, that with a pitch equal to 0, the negative slip would become infinite; and this formula cannot be trusted beyond the limits of the experiments.

The power exerted by the engines in the experiments upon the Pelican was ascertained by means of an indicator, which, in the experiments of 1847, was applied only to the top of the cylinder, but in the experiments of 1848 was applied both to the top and bottom. The mode of reckoning the power exerted by the engines was not the same as is usually adopted in this country, but the measures employed are nevertheless convertible. In England the practice is to take the mean pressure in pounds per square inch, exhibited by the indicator, less a pound and a half which is deducted as an allowance for the power consumed in overcoming the friction of the engine itself; then multiplying the residual pressure by the number of square inches in the area of both pistons, by the number of feet travelled by the piston in the minute, and dividing by 33,000, we have the measure of the dynamical effort of the engine in actual horses' power. In the French experiments the pressure upon the piston is taken in centimètres of mercury; and a centimètre is ·39371, or somewhat more than one third of an English inch, so that a square centimètre is ·155 of an English square inch. Now a column of mercury an inch square and an inch high weighs, at 60°, about ·491 lbs.; hence a column of mercury a centimètre square and an inch high

will weigh ·155 of this amount, or ·0761 lbs., and a column of mercury a centimètre square and a centimetre high will weigh ·39371 of this last amount, or ·02996 lbs. A kilogramme is 2·2055 lbs. avoirdupois, so that a cubic centimètre of mercury will weigh ·01358 kilogrammes. A linear mètre contains 100 centimètres, therefore a square mètre contains 10,000 square centimètres; and 10,000 times ·01358 kilogrammes, or 135·8 kilogrammes will be the pressure exerted on a mètre of surface by a column of mercury a centimètre high. If now we call D the diameter of the cylinder in mètres, C the stroke of the piston in mètres, N the number of strokes made per minute, and p the mean pressure exerted upon the piston in centimètres of mercury, then, bearing in mind that there are two cylinders, and that the stroke of the piston both ways has to be reckoned, the power exerted, measured in kilogrammes, raised one mètre high in the minute, will be represented by $135{\cdot}8 \times 2\ D^2 \times {\cdot}7854 \times 2\ C \times N \times p$, or, in other words, $426{\cdot}6\ D^2\ C\ N\ p$. The power exerted per second will be $\frac{1}{60}$th of this, or $7{\cdot}11\ D^2\ C\ N\ p$; and MM. Bourgois and Moll have adopted the expression $7{\cdot}117\ D^2\ C\ N\ p$ to represent the gross power exerted by the engine per second in kilogrammètres, or in kilogrammes raised one mètre high. From this, however, some deduction has to be made for friction, before it can express the power transmitted to the screw; and it is clear that the friction consists of two parts, of which one is nearly constant, whatever be the pressure put upon the piston, while the other varies with the amount of strain transmitted through the working parts. For overcoming the constant friction of the engine, MM. Bourgois and Moll, from some experiments they made, consider that 5 centimètres of mercury, or ·9666 lbs. per square inch, must be accepted as a sufficient allowance; while the friction, which varies with the strain, is designated by the co-efficient A. The power actually operative in turning round the screw shaft will, therefore, be expressed by the formulæ $A \times 7{\cdot}117\ D^2\ C\ N\ (p - 5)$, and this quantity will always be proportional to the quantity $7{\cdot}117\ D^2\ C\ N\ (p - 5)$, so that the latter expression will serve as a measure of the power transmitted to the screw.

This, then, gives an expression of the power exerted by the engine. The power utilized by the ship, or, in other words, the dynamometer power, is approximately represented by the expression $K\ B^2\ V^3 = K\ B^2\ a^3\ n^3 = K\ B^2\ (1 - \rho)^3\ h^3\ n^3$; K being the resistance in kilogrammes per square mètre of the immerged section of the vessel, at a speed of one mètre per second; B^2, the immerged midship section in the square mètres; V, the speed of the vessel through the water in mètres per second; a, the advance of the screw through the water per revolution; n, the number of revolutions of the screw per second; h, the pitch; and ρ, the slip of the screw. The utilization, therefore, u, or, in other words, the ratio of the dynamometer to the indicator power, will be represented by the expression $u = \frac{K\ B^2\ V^3}{7{\cdot}117\ C\ N\ (p-5)} = \frac{K B^2\ a^3\ n^3}{7{\cdot}117\ C\ N\ (p-5)} = \frac{K B^2\ (1-\rho)^3\ h^3\ n^3}{7{\cdot}117\ D^2\ C\ N\ (p-5)}$; and calling r the ratio of the gearing wheels interposed between the screw shaft and the engine, we may put the expression of the utilization, or ratio of dynamometer to indicator power, under the following forms: —

$$u = \frac{K B^2 r^3}{7{\cdot}117\ D^2 C \times 60^3} \times \frac{N^2}{(p-5)} \times a^3 \qquad (1)$$

$$u = \frac{K B^2}{7{\cdot}117\ D^2 C \times 60} \times \frac{n^2}{\left(\frac{p-5}{r}\right)} \times a^3 \qquad (2)$$

$$u = \frac{K B^2}{7{\cdot}117\ D^2 C \times 60} \times \frac{1}{\frac{\left(\frac{p-1}{r}\right)}{n^2}} \times a^3 \qquad (3)$$

The efficiency of all the screws tried in the "Pelican" has been calculated by MM. Bourgois and Moll by the aid of these formulæ, and especially by the aid of formula (1). When the engines are connected immediately to the shaft, the effect is obviously the same as if the gearing wheels were of equal diameter. The ratio of the gearing, would in such a case, be expressed by the fraction $\frac{1}{1}$, which is the same as 1, so that the ratio of the gearing would spontaneously disappear in the formulæ, since the multiplication or division of the other quantities by 1 would not in any way alter their value.

The whole of the quantities entering into the composition of these formulæ have been derived from direct experiment, except the quantity K; and as that quantity is involved in some uncertainty, so far as the experiments in the "Pelican" are concerned, it will be useful to investigate the values of the other quantities comprehended in the formulæ independently of K, so that they may continue to be applicable even if a new value for K be finally adopted. Now, if, as appears by formula (1), $u = \frac{K B^2 r^3}{7{\cdot}117\ D^2 C \times 60^3} \times \frac{N^2}{(p-5)} \times a^3$, then $\frac{u}{K} = \frac{B^2 r^3}{7{\cdot}117\ D^2 C \times 60^3} \times \frac{N^2}{(p-5)} \times a^3$; and putting u' for $\frac{u}{K}$, we have $u' = \frac{B^2 r^3}{7{\cdot}117\ D^2 C \times 60^3} \times \frac{N^2}{(p-5)} \times a^3$, or, by formula (3), $u' = \frac{B^2}{7{\cdot}117\ D^2 C \times 60} \times \frac{1}{\frac{\left(\frac{p-5}{r}\right)}{n^2}} \times a^3$. Now it has been already explained that $p - 5$, with the addition of a constant factor, expresses the mean effective pressure, in centimètres of mercury, of the steam urging the piston, and that it is permissible, therefore, to take $p - 5$ as representative of the mean effective pressure exerted by the engine. If, then, the screw travels twice, three times, or any other number of times faster than the engine, it is plain that, by connecting the engine immediately to the screw shaft, a half, a third, or other fraction of the pressure corresponding to the new speed of piston, would impart the same power as before to the screw. If r be the ratio of the gearing, it is clear that, neglecting the constant factor already mentioned, the fraction $\frac{p-5}{r}$ will represent either the reduced pressure, which, when applied direct to the screw shaft, will suffice to give the same power, or it will represent the diminished power expended in producing a revolution of the screw compared with that necessary to produce a revolution of the engine. The fraction, therefore $\frac{\left(\frac{p-5}{r}\right)}{n^2}$, will, still neglecting the constant factor, represent

the effective pressure acting on the screw shaft, divided by the square of the number of revolutions of the screw. Now in paddle vessels it has been found that the pressure in the cylinders increases as the square of the number of revolutions, supposing of course that the immersion remains invariable and that the vessel is not affected by the wind. The experiments in the Pelican show that this law also obtains in the case of screw vessels, and it hence follows that the fraction $\frac{\left(\frac{p-5}{r}\right)}{n^2}$ will express the effective pressure necessary to be employed in cylinders coupled immediately to the screw shaft, in order to cause the shaft to make one revolution per second; but the result has to be corrected by a constant factor, the value of which depends on the size of the screw and the size and shape of the vessel. — It is time, however, to give some of the promised citations from the memoir of MM. Bourgois and Moll, to which the foregoing remarks have reference; but as this production stands greatly in need of compression, I cannot undertake to give in all cases a literal translation, but shall abridge the verbiage as much as seems practicable without obscuring the sense: —

Elementary stroke of rotation.—The abstract value of the abstract ratio $\frac{\left(\frac{p-5}{r}\right)}{n^2}$ which we shall henceforth, for more simplicity, call P_e, expresses, with the exception of a constant factor which depends solely on the proportions of the screw and the size and shape of the vessel — the effective pressure requisite to be exerted in the cylinders, when coupled immediately to the screw shaft, to produce one revolution of the screw in the second. As regards the elementary stroke of rotation capable of producing this speed of revolution of one turn of the screw per second, and which we shall denote by C_e, it would be determined by the relation $C_e = A \times 1{\cdot}0330 \times \frac{D^2 C}{2 \times 76} \times P_e$, or putting $A_1 = A \times \left(\frac{1{\cdot}0330}{2 \times 76}\right)$ then $C_e = A_1 D^2 C P_e$,—the kilogramme and the mètre being taken as the measures of the forces, and A being the general co-efficient of the reduction of the power of the engine, as before explained. It is easy now to see that the complete resolution of the problem rests substantially on the determination of the values of the second members of the equations $u = K u'$, and $C_e = A_1 D^2 C P_e$, and principally on the determination of the values of $u' = \frac{B^2}{7{\cdot}117 D^2 C \delta 60} \times \frac{1}{P_e} \times a^3$ and $P_e = \frac{\left(\frac{p-5}{r}\right)}{n^2}$. The precise values of K and A, though interesting to ascertain, are of inferior importance to the determination of the values of u and C_e, and in the Pelican the elements from which the values of u and C_e were computed, remained without alteration in the several experiments, so that the relative results must be correct, even if we suppose the absolute values to be in some degree uncertain.

Unknown quantities of the problem. — Besides the two principal unknown quantities u' and P_e, we have called in the aid of an auxiliary unknown quantity, the intervention of which, if not indispensable, is at least of much utility in facilitating some of the calculations. The co-efficient of slip has already been expressed by ρ, and the combination of ρ and P_e leads immediately to the value of u', so that if we discover the practical and rational formulæ, or in default of this, if we draw a series of curves, to express ρ and P_e in functions of the defined variables on which those quantities depend, we shall have discovered the law of the efficiency, and consequently will be able to specify the circumstances which make the efficiency a maximum.

General estimate of the results obtained. — It will be apparent on inspecting the tables that the value of the expression $u = K u'$, or of the co-efficient of efficiency u', diminishes as the speed increases. This

is inevitable from the increase, in a higher ratio than the square of the speed, of the coefficient of resistance K; for, with an aggravated resistance, there is an increased slip, and consequently an inferior efficiency. This increase in the resistance, in a more rapid ratio than as the square of the speed, is imputable to the difference in the level of the water at the bow and stern, whereby the vessel is forced back or resisted by a hydrostatic pressure. If our attention be turned to the values of P_e with the three different speeds at which each screw has been tried, we shall find that those values remain constant in each case in which the experiment has been made during a calm. The wind will, of course, either diminish or increase the resistance of the hull as its direction may be favourable or adverse; and this effect will be the more conspicuous at the low speeds.

Curves of the co-efficients of slip and efficiency. — In investigating the values of the coefficients of slip, and of efficiency, we have represented the results obtained with the screws of the diameter of 1·68 mètres by two clusters of curves, — the one relating to the experiments with the simple hull, and the other to the experiments with the resisting plane. They have all the pitches for abscissæ; and in the case of the screws with four blades, three series of curves have been traced for each of the fractions of pitch 0·30, 0·375, 0·45, 0·60, and 0·75. The ordinates of the first series represent the co-efficients of slip cleared from all disturbing influences; the ordinates of the second series represent the values of $\frac{\left(\frac{p-5}{r}\right)}{n^2}$; and the ordinates of the third series represent the values of the efficiency already designated by u'. This last curve is naturally the product of the other two. The same mode of procedure has been adopted in the case of the screws with two blades, but only with the fractions of the pitch 0·30 and 0·45. The elements of the curves, which refer to the simple hull, have been brought to the speed of 9·5 knots in preference to the medium or the low speed, so as to reduce as much as possible the disturbing influence of the wind, and of the irregular variations of the current. The maximum efficiencies, in the case of the simple hull, which answer to different fractions of the pitch with screws of four and of two blades, are as follows: —

SCREWS WITH FOUR BLADES, DIAMETER 1·680 MÈTRES.

	Pitch in Mètres.	Fraction of Pitch.	Ratio of Pitch to Diameter.	Efficiency or Utilization.
Simple hull -	2·747	0·300	1·035	K × 0·07495
	2·928	0·375	1·743	K × 0·07485
	3·095	0·450	1·842	K × 0·07465
	3·335	0·600	1·985	K × 0·07405
	3·473	0·750	2·067	K × 0·07350

SCREWS WITH TWO BLADES, DIAMETER 1·680 MÈTRES.

	Pitch in Mètres.	Fraction of Pitch.	Ratio of Pitch to Diameter.	Efficiency or Utilization.
Simple hull -	2·553	0·300	1·520	K × 0·07500
	2·838	0·450	1·689	K × 0·07690

It would appear, from these figures, that screws of two blades are a little more efficient than screws of four blades; but at the time the experiments upon the two-bladed screws were made the engine was working with somewhat less friction than when the experiments upon the four-bladed screws were made. The two kinds of screws, therefore, must be accepted as about equal in efficiency, but the screws with two blades should be made with a somewhat shorter pitch.

If we bring a straight line parallel to the axis of the abscissæ or pitches, but distant therefrom 0·97 of the ordinate, which represents the maximum efficiency in the case of screws with four and with two blades, and whether combined with the simple hull or with the addition of the resisting plane, it is clear that the intersection of this straight line with the curves of efficiency for each fraction of the pitch will answer to an equal number of accurate solutions of the problem. Each of the curves of efficiency which rises high enough to be met by the straight line will furnish two intersections, and, consequently, two values for every fraction of pitch interpolated between those of the experiments. We are thus led to two sets of solutions that are equally satisfactory — the one with longer, and the other with shorter, pitches. The constituents of each series are as follows: —

SCREWS WITH FOUR BLADES, DIAMETER 1·680 MÈTRES.

Simple Hull.	Pitch in Metres.	Ratio of Pitch to Diameter.	Fraction of Pitch.	Slip.
1st series, shortened pitches -	1·843	1·097	0·300	0·2351
	2·065	1·229	0·375	0·2485
	2·398	1·427	0·450	0·2710
	2·735	1·628	0·600	0·2865
	2·988	1·779	0·750	0·2960
2nd series, elongated pitches -	3·400	2·024	0·300	0·3885
	3·523	2·097	0·375	0·3810
	3·625	2·158	0·450	0·3735
	3·745	2·229	0·600	0·3630
	3·795	2·259	0·750	0·3550

SCREWS WITH TWO BLADES, DIAMETER 1·680 METRES.

Simple Hull.	Pitch in Mètres.	Ratio of Pitch to Diameter.	Fraction of Pitch.	Slip.
1st series, shortened pitches -	2·155	1·283	0·300	0·2905
	1·970	1·173	0·450	0·2445
2nd series, elongated pitches -	2·795	1·664	0·300	0·3575
	3·435	2·045	0·450	0·3825

These figures show that with the same fraction of pitch, and the same relative resistance, the ratio of the pitch to the diameter ought to increase when we pass from a screw of two blades to a screw of four blades; and this rule also holds in passing from a screw of four blades to a screw of six. It further appears, from the results afforded by screws of different diameters, that if the practical efficiency of the screw of 1·68 mètres in diameter is expressed by K × 0·0727, we can, without material error, fix the efficiency of the screw of 2·5 mètres in diameter at K × 0·0820, which corresponds to a superior

efficiency in the case of the large screw of 12·8 per cent. In the case of the screw 2·05 mètres in diameter, the efficiency will be represented by K × 0·0770; and each screw will have two pitches, which will give the same efficiency of 3 per cent. less than the greatest maximum performance. In the case of screws with four blades, and of the diameter of 2·5 mètres, this measure of efficiency appears to be equally attained with a pitch of 5·229 mètres, ratio of pitch to diameter 2·091, fraction of pitch 0·300; and with a pitch of 6·381 mètres, ratio of pitch to diameter 2·552, and fraction of pitch 0·450. It appears to us very probable that the screw of this diameter, which would realise the maximum maximorum, or highest maximum, efficiency, would have a pitch intermediate between these two, but approaching more nearly to 5·229 mètres than to 6·381 mètres, and a fraction of pitch a little inferior to 0·300.

Favourable influence of a curved directrix, or increasing pitch. — An ordinary screw of a uniform pitch is generated by winding an inclined plane upon a cylinder, and in casting screws in loam, an inclined plane bent to the circumference of the screw, serves to direct the loam board by which the form of the screw is struck out. This inclined plane is called the directrix; and if the directrix, instead of being a straight line, be a portion of a rising curve, it is clear that the screw will be formed with an increasing pitch. We believe we can fix the approximate advantage of the curved directrix, or increasing pitch, at about 5 per cent. If now we wish to group together the good practical utilizations and the maximum maximorum utilizations for the straight directrix and the curved directrix with the different diameters of screw of 1·680, 2·050, and 2·500 mètres, and with the midship section of 10·20 square mètres, we shall accomplish that object by constructing the following tables: —

	Diameters of the Screws in Mètres.	Good practical Utilizations, that is to say, 3 per cent. less than the maximum maximorum.	Maximum maximorum Utilizations.
Straight directrix	1·680	K × 0·07270	K × 0·07495
	2·050	K × 0·07700	K × 0·07938
	2·500	K × 0·08200	K × 0·08454
Curved directrix	1·680	K × 0·07633	K × 0·07870
	2·050	K × 0·08185	K × 0·08335
	2·500	K × 0·08610	K × 0·08877

If we wish to form an idea of the efficiency of these several diameters relatively with the power generated in the cylinders of the engine, it will be sufficient to substitute for K its value for the speed of 9·5 knots, and which may be taken at 6 kilogrammes. Putting therefore K = 6, we are conducted to the following results: —

	Diameters of the Screws in Mètres.	Good practical Utilizations, that is to say, 3 per cent. less than the maximum maximorum.	Maximum maximorum Utilizations.
Straight directrix	1·680	0·436	0·450
	2·050	0·462	0·476
	2·500	0·492	0·507
Curved directrix	1·680	0·458	0·472
	2·050	0·491	0·500
	2·500	0·517	0·553

If, finally, we wish to determine the power really consumed by the propeller itself, when cleared of the deductions necessary to be made from the power generated in the cylinders on account of the friction of the engine, it is necessary to assign a numerical value to the co-efficient A, already referred to, as entering into the composition of the effective pressure $A(p-5)$. Recent experiments authorize us in concluding that A is but little less than 0·8; and it will suffice to divide by this quantity the figures of the two last columns of the preceding table to arrive at the desired result. The table thus adjusted will be as follows: —

	Diameters of the Screws in Mètres.	Good practical Utilizations, that is to say, 3 per cent. less than the maximum maximorum.	Maximum maximorum Utilizations.
Straight directrix -	1·680	0·545	0·562
	2·050	0·578	0·595
	2·500	0·615	0·634
Curved directrix -	1·680	0·572	0·590
	2·050	0·614	0·625
	2·500	0·646	0·666

The general result deducible from these comparisons is, that with the greatest diameters, such as 2·500 mètres, or, with the least relative resistances, about two-thirds of the power actually applied to the screw will be available in the propulsion of the vessel, or, in other words, that the dynamometer power will be about two-thirds of the effective engine power; whereas with the smallest diameters, such as 1·372 mètres, or the greatest relative resistances, only ·55 of the power actually applied to the screw will be available in the propulsion of the vessel, or, in other words, the dynamometer power will, in such a case, be only about half the engine power. The ratio of these performances being 1·28, and the cube root of 1·28 being 1·09, it follows that, with an equal expenditure of engine power, a vessel that would only attain a speed of 11 knots with a screw of 1·372 mètres diameter would attain a speed of 12 knots with a screw of 2·500 mètres diameter.

Value of the elementary stroke of rotation. — It is evident that the value of the elementary stroke of rotation C_e depends on the number of blades of the screw, and that with any given number of blades it ought to increase with the resistance as well as with the diameter, the fraction of the pitch, and the pitch. In comparing the values which C_e takes in the experiments, or, what comes to the same thing, the values which P_e takes at a speed of 9·5 knots with the simple hull, and 6·5 knots with the resisting plane, it will be seen that C_e does not increase much more than 12·5 per cent. with a difference in the resistance of the vessel of 50 per cent. An increase in the resistance of a screw vessel has for its most conspicuous result an increase in the slip. The elementary stroke of rotation, or, in other words, the power necessary to produce a revolution per second, varies but little with changes of resistance, and hence there is no great difference in the number of revolutions of the screw. In the case of a vessel similar to the "Pelican," both in hull and screw, but of a larger or smaller size, and where the speeds taken for the purposes of comparison are as the square roots of the linear dimensions of the respective vessels, the value of the elementary stroke of rotation will vary as the fifth power of a linear dimension of the hull or screw. This relation will equally apply even when the forms of the vessels are not similar, provided the linear dimensions of the screws are to each other as the square roots of the total resistances per unit of speed, and the elementary stroke will in such a case still vary as the fifth power of some linear dimension of the screw.

Summary of results.—Not only does the efficiency of a screw increase with its diameter, or rather with the relative resistance, but the proper ratio of the pitch to the diameter, and the corresponding fractions

of the pitch, vary with the relative resistance, — the ratio of the pitch to the diameter diminishing when the fraction of the pitch increases, while the fraction of the pitch varies with an inverse progression. The elements which concur in realising the different maximum maximorum performances in the case of the "Pelican" are exhibited in the following table: —

SCREWS OF FOUR BLADES, STRAIGHT DIRECTRIX OR UNIFORM PITCH.

Diameters in Mètres.	Pitch in Mètres.	Ratio of Pitch to Diameter.	Fraction of Pitch.	Relative Resistances.	Maximum maximorum Utilization.	Ratio of Utilization.	
1·372	1·858	1·354	0·450	K × 5·425	0·06260	1·000	0·823
1·680	2·827	1·683	0·360	K × 3·615	0·07500	1·077	0·887
2·050	3·895	1·950	0·310	K × 2·429	0·07950	1·142	0·940
2·500	5·500	2·200	0·281	K × 1·632	0·08460	1·215	1·000

The relations exhibited by this table are independent of the absolute values of the diameter and pitch inscribed in the first and second columns, or, in other words, the same maximum maximorum performance will continue to be obtained so long as the propeller and ship satisfy the conditions indicated by the third, fourth, and fifth columns. The elementary resistance K, it may be useful to repeat, is the resistance encountered by a square mètre of the immersed section of the hull, at a speed of 9·5 knots per hour; and the value of this resistance, or the weight which would balance it, is probably about 6 kilogrammes in the case of the "Pelican,"—a kilogramme being 2·2055 lbs. avoirdupois. The fraction of the pitch, it will be seen, varies in the inverse ratio of the pitch to the diameter; whence it follows that the length of the screw in the direction of the axis varies in the proportion of the diameter; and that with the same diameter, but a varying relative resistance, the length of the screw in the direction of the axis should remain unchanged at about 0·15 of the diameter. Screws of four blades appear to require pitches about one-fourth greater than screws of two blades, and screws of six blades pitches about one-fourth greater than screws of four blades; but the screws of six blades should have an increase of three-fourths in the fraction of pitch. Screws of six blades, if made of large diameter and of a long pitch, appear to be somewhat superior in efficacy to screws of four blades; but this result is inverted if the pitch be reduced, or the diameter be diminished. The direct resistance caused by the cutting edges is greater in the case of screws of many blades; and this influence is more sensible when the slip is small. The following table exhibits the proportions of screws, whether formed with two, four, or six blades, that will give the maximum efficiency in vessels of different kinds: —

TABLE OF THE PROPER PROPORTIONS OF SCREW PROPELLERS.

Class of Screw Vessel.	Usual relative Resistances.	Screws of Two Blades.		Screws of Four Blades.		Screws of Six Blades.	
		Ratio of Pitch to Diameter.	Fraction of Pitch.	Ratio of Pitch to Diameter.	Fraction of Pitch.	Ratio of Pitch to Diameter.	Fraction of Pitch.
	K × 5·5	1·006	0·454	1·342	0·454	1·677	0·794
	K × 5·0	1·069	0·428	1·425	0·428	1·771	0·749
	K × 4·5	1·135	0·402	1·513	0·402	1·891	0·703
Auxiliary line of battle ship	K × 4·0	1·205	0·378	1·607	0·378	2·009	0·661
Auxiliary frigate	K × 3·5	1·279	0·355	1·705	0·355	2·131	0·621
High speed line of battle ship	K × 3·0	1·357	0·334	1·810	0·334	2·262	0·585
High speed frigate	K × 2·5	1·450	0·313	1·933	0·313	2·416	0·548
High speed corvette	K × 2·0	1·560	0·294	2·080	0·294	2·600	0·515
Despatch boat	K × 1·5	1·682	0·275	2·243	0·275	2·804	0·481

Example of the computation of the elements of a screw vessel. — From the results of the experiments made upon the "Pelican," it will not be difficult to determine the proportions proper for any other screw vessel L required to maintain the speed V′, and having an immersed cross section B'^2, and a resistance of

hull $K'' B'^2 V'^2$. As the efficiency increases in proportion as the relative resistance diminishes, the diameter d' of the screw of the ship L should be taken as large as the draught of water will permit. To the diameter thus fixed there will correspond a relative resistance, which will be expressed by $\frac{K''B'^2}{d'^2}$ and if the propeller has to be made capable of being raised out of the water through a trunk at the stern, a screw of two blades must be selected: but if this is not a necessary condition, the preference may then be given to a screw of four or of six blades, according as we attach the most value to the lightness of the propelling apparatus, or to a diminution of the speed of its revolution.

The relative resistance being the ratio of the square of the diameter of the screw to the area of the immerged cross section of the vessel, it is clear that when the diameter of the screw and the area of the immerged cross section are known, the relative resistance is also known; and so soon as the number of blades that the screw is to have has been specified, it becomes easy to determine the proper ratio of the pitch to the diameter, and the proper fraction of pitch, either by the aid of the foregoing tables, or by the following considerations, on which, indeed, the tables have been constructed: — First determine what diameter d it would be necessary to give to the screw of the "Pelican," in order that the relative resistance of that vessel should become the same as that of the new ship L; and this discovery may be made by means of the equation $\frac{K B^2}{d^2} = \frac{K'' B'^2}{d'^2}$. The two vessels being thus brought into circumstances of similarity, the next thing is to determine the most eligible values of the ratio of the pitch to the diameter, and of the fraction of the pitch in the case of the "Pelican" when fitted with a screw of the diameter d; and this may readily be done by the aid of arithmetical or graphical interpolations of the kind employed in determining the values given in the foregoing tables. The values thus arrived at as proper for proportioning the hypothetical screw of the "Pelican" will be those which are proper for proportioning the screw of the ship L.

The hypothetical screw of the "Pelican," and the screw of the ship L, will have the same co-efficient of slip, the value of which may be readily ascertained by the formula $\rho = \frac{e^{11{\cdot}5}\, b^{0{\cdot}85}}{e^{1{\cdot}15}\, b^{0{\cdot}85} + c}$. Let V' be the speed which it is required that the vessel L shall attain; D', the diameter of cylinder; C', the stroke of the piston; p', the gross mean pressure of the steam in centimètres of mercury; N', the number of revolutions per minute made by the engine; n', the number of revolutions per second made by the screw; r', the ratio of the gearing; x', a constant equal to 5 centimètres of mercury, which is to be subtracted from p', so that $p' - x'$ may be proportional to the effective pressure; A', a co-efficient of reduction for the resistances of the engine itself, analogous to that designated by A in the case of the "Pelican;" and C'_e the elementary stroke of rotation; then supposing that the new vessel is to have two cylinders, $C'_e = A'_1 D'^2 C' \times \frac{\left(\frac{p'-x'}{r'}\right)}{n'^2}$. On the other hand, we have $\frac{C'_e}{C_e} = \left(\frac{d'}{d}\right)^5$; whence it may be concluded that

$$D'^2 C' \times \frac{\left(\frac{p'-x'}{r'}\right)}{n'^2} = \frac{A_1}{A'_1} \times D^2 C \times \frac{\left(\frac{p-5}{r}\right)}{n^2} \times \left(\frac{d'}{d}\right) \quad . \quad . \quad . \quad . \quad . \quad . \quad . \quad (1);$$

or substituting $\frac{N'r'}{60}$ for n', we have

$$D'^2 C' \times \frac{(p'-x')}{N'^2} \times \frac{1}{r'^3} = \frac{1}{60^2} \times \frac{A_1}{A'_1} \times \frac{\left(\frac{p-5}{r}\right)}{n^2} \times \left(\frac{d'}{d}\right)^5 \quad . \quad . \quad (2)$$

The ratio $\frac{d'}{d}$ is the same as $\sqrt{\frac{K''B'^2}{KB^2}}$; and we may put $B^2 = 10{\cdot}20$ square mètres, and $K = 6$ kilogrammes, at a speed of 9·5 knots. The values of P_e, which are the same as those of $\frac{\left(\frac{p-5}{r}\right)}{n^2}$, may be obtained from the tables given in the Appendix. The value of $D^2 C$ is equal to 1·204, the diameter D being 1·12 mètres, and the stroke C ·96 mètres. As regards the quantity $\frac{A_1}{A'_1}$, which represents the ratio of the co-efficient of reduction for the engine of the "Pelican," and that of the vessel L, it will be permissible to make it equal to 1, if the engines are not of a very different character from each other. The equation (2) will then become

$$D'^2C' + \frac{(p'-x')}{N'^2} \times \frac{1}{r'^3} = \frac{1}{60} \times D^2C \times \frac{\left(\frac{p-5}{r}\right)}{n^2} \times \left(\frac{'}{d}\right) \quad . \quad . \quad . \quad . \quad . \quad (3)$$

$$D'^2C' \times (p'-x) \times N = 60\ D^2C \times \frac{\left(\frac{p-5}{r}\right)}{n^2} \times \left(\frac{d'}{d}\right)^5 \quad . \quad . \quad . \quad . \quad (4)$$

If we omit the quantities x and x', which each represent 5 centimètres of mercury, the equations will become

$$D'^2C' \times \frac{p'}{N'^2} \times \frac{1}{r'^3} = \frac{1}{60^2} \times D^2C \times \frac{\left(\frac{p}{r}\right)}{n^2} \times \left(\frac{d'}{d}\right)^5 \quad . \quad . \quad . \quad . \quad . \quad (5)$$

and

$$D'^2C' \times p' \times N' = 60 \times n'^3 D^2C \times \frac{\left(\frac{p}{r}\right)}{n^2} \times \left(\frac{d}{d}\right)^5 \quad . \quad . \quad . \quad . \quad . \quad (6)$$

The two last formulæ, which are substantially the same, will give results of sufficient accuracy for the wants of practice. In the tables in the Appendix the values of the fraction $\frac{\left(\frac{p}{r}\right)}{n^2}$ will be found, as well as of the fraction $\frac{\left(\frac{p-5}{r}\right)}{n^2}$. The value of the first of these fractions is not strictly constant, but any variation that there is in it is of very small amount.

These citations will enable a just estimate to be formed of the merits of the memoir of MM. Bourgois and Moll, which, upon the whole, is very creditable to their talents and industry, but which would have been of great utility if a dynamometer had been used, and if a simpler mode of investigation had been adopted. Certainly their researches by no means exhaust the subject; and we have yet to learn, so far as experiment is concerned, what increase in the immersion of a screw will be equivalent to a given enlargement of its diameter, and what alteration in the thrust is produced by a given alteration of the pitch. In the case of superficial screws, however — and these comprise most of the examples which occur in practice — the experiments of MM. Bourgois and Moll enable us, with any given diameter, to specify the best pitch and the best length of screw that can be employed, whether the screw is formed with two, four, or six blades. For taking K as the resistance per square mètre of immerged section, B^2 the area of immerged midship section in square mètres, d the diameter of the screw in mètres, and p the pitch of the screw in mètres, then $\sqrt{\frac{B^2}{K}} = d$, and d multiplied by the ratio of pitch to diameter given in the second column of the second table at page 161. will be equal to p. Finally $\frac{p \times \text{fraction of pitch}}{\text{number of blades}} = \text{length of screw.}$

It will be useful to illustrate this question by an example, and I shall take the case of a high speed corvette or screw steam packet of full power. The same mode of procedure is applicable with any other class of vessels, and I shall take the dimensions in French measures, though English measures may also be employed. Referring to the table of the proper proportions of screw propellers given in page 161., it will be seen that the relative resistance of a high speed corvette is $K \times 2$, or taking K as unity, the relative resistance may be put as equal to 2. Let the immerged midship section or B^2 be 38·72 square mètres or 416·79

square feet. Then $\sqrt{\frac{38{\cdot}72}{2}} = 4{\cdot}4$, which is the diameter of the screw in mètres, or if the dimensions be taken in feet, the diameter will be 14·43 feet. Supposing a screw with four blades to be employed, then the ratio of pitch to diameter proper for a screw of that kind when applied to a high speed corvette being by the table in page 161. 2·080, we have for the proper pitch of the screw $4{\cdot}4 \times 2{\cdot}080 = 9{\cdot}152$ mètres or 30·01 feet. The proper length of the screw being the pitch multiplied by the fraction of the pitch and divided by the number of blades, and the proper fraction of pitch for a screw of this kind being by the table ·294, we have 9·152 mètres multiplied by ·294 and divided by 4, which gives a length of ·672 mètres or 2·2047 feet. By a similar mode of procedure there will be no difficulty in fixing for any given class or size of screw vessel the proportions of screw which will give a maximum performance, whether the screw selected be one of two, of four, or of six blades. The main difference which will be produced by increasing the number of blades will be to diminish the speed of the engine; for a coarse pitch is proper for a screw of many blades, and a coarse pitch involves a slow engine, in order that there may not be an injurious amount of slip. In cases therefore in which it is apprehended that the engine if coupled immediately to the screw shaft would move with an inconvenient velocity, there are two alternatives which present themselves whereby the velocity may be diminished. The one is the use of gearing; the other is the employment of a screw of several blades and of a coarse pitch. The latter expedient appears to be the preferable one, except in cases in which the screw has to be drawn up through a trunk, and under those conditions screws of two blades must of course be employed.

Having now disposed of the elaborate memoir of MM. Bourgois and Moll, and having shown in what way the results they obtained may be employed to determine the proper proportions of screw propellers in the case of other vessels, I propose to indicate in a few words a mode of considering the subject which is simpler than that which they have adopted, and by which the main points of the inquiry may be made readily intelligible to common understandings. Setting aside for the moment, the question of slip, it is obvious that a screw draws forward a vessel in the water, in the same way in which the screw of a slide lathe draws forward the rest, or in which a screw is drawn forward when penetrating a piece of wood. Now as no such mechanical combination as that of a body drawn forward by a screw, can either gain or lose power except by friction, it follows, that neglecting slip and friction, the thrust upon the screw shaft of a vessel, multiplied by the space through which the vessel passes in a given time, must be precisely the same as the force urging the pistons of the engine multiplied by the space through which they pass in the same time. In other words, the dynamometer power would, under the supposed conditions, be equal to the engine power, as must obviously be the case if none of the power be dissipated by slip or friction, since there is no other way in which the power can be expended. Now if a screw be turned round with a given leverage and a given pressure or weight, the amount of thrust which it will exert will depend upon the fineness of the pitch; for if the pitch be fine the advance per

revolution will be small, and in proportion to the smallness of the advance will be the force with which the advance is made. If now we suppose a small amount of slip to take place, such as obtains in a screw vessel, these relations will nevertheless, in the main, continue to apply; and in ordinary screw propellers, which have a moderate amount of friction and slip, the thrust will become greater as the pitch is made less. The engine, however, will at the same time move with an increased velocity, and it does not by any means follow that there will be a mechanical advantage from a very fine pitch. But in every case in which a heavy load has to be overcome with a limited dimension of engine, a fine pitch will be the most suitable for overcoming the impediment. In fact, diminishing the pitch of the screw, in the case of a screw vessel, has a similar operation to diminishing the diameter of the paddle wheels in the case of a paddle vessel. If the diameter of the paddle wheels of a paddle vessel be diminished, their tractive force will be increased in the same proportion; but the slip of the floats through the water will at the same time be increased, if they remain of the same dimensions, since there is a greater pressure exerted upon them. The column of water upon which a screw acts, in consequence of its want of cohesion and its deficient inertia, is bent up into a wave at the stern, and if an increased pressure be put upon it this disturbance will be increased; but if the screw were to be sunk deeply in the water the inertia of the superincumbent column would have to be overcome before a wave could be raised, and the loss of power, from slip and centrifugal action, would be diminished by the small amount of disturbance which the water on which the screw acts would then have to sustain. Upon the whole it appears that, in the case of deep screws,—or indeed of any screws which have an adequate resistance opposed to them, so that the slip does not become of serious amount,—the amount of thrust upon the screw shaft will, with any given pressure upon the pistons, vary nearly as the pitch of the screw; or with any given pitch of screw, the thrust upon the screw shaft will vary nearly as the pressure upon the pistons. With a fine pitch, therefore, it will happen that much the same effect will be produced upon the column of water upon which the screw acts, as would be produced by employing a large power of engine. The column of water in fact, will be more bent up at the stern, at the same time that the thrust of the screw shaft is increased; and it hence follows, that vessels which employ screws of a fine pitch more frequently manifest the existence of a negative slip, as they are propelled, not merely by the thrust of the screw itself, but also by their gravitation down the declivity which is caused by the wave which the screw raises at the stern. With any given pressure exerted upon the pistons of an engine, and any given pitch of the screw, the thrust exerted by the screw shaft may be approximately determined; and, in fact, it is the friction alone that will prevent that determination from being strictly correct. If the space passed through by the screw, supposing it to work in a solid nut, be twice greater than the space passed through by the pistons, then the thrust of the screw shaft will be one-half of the pressure exerted by the pistons; if the space passed through by the screw, supposing it to work in a solid nut, be three times greater than the space passed through by the pistons, then the thrust of the screw shaft will be one-third of the pressure exerted by the pistons: and so on with

all other proportions. The existence of slip will not affect this determination, for the thrust will be the same, whether there is slip or not, while, as regards the friction, its amount is not so large or so inconstant that it can materially interfere with the relative result.

In connexion with the question of the immersion of the screw, I may here refer to two phenomena incident to the operation of screw vessels, the causes of which have not yet received explanation, but which I believe to be mainly due to the unequal immersion of the arms. The first of these phenomena is, the inability of screw vessels to back or go astern without at the same time being carried sideways out of their intended track in spite of the action of the rudder; and the second is, the oscillating or rather twisting action perceptible in the stern of screw vessels when they are under way. Now, when a steam vessel begins to back, she is generally moving slowly, so that the rudder has at that time comparatively little power; and if, while the vessel is going slowly through the water, the engine is suddenly reversed, then the centrifugal action of the screw will be acting against the gravity of the water, and it may happen, that to the upper portion of the circle described by the arms the water can only gain a partial admission, owing to the repulsion caused by the centrifugal force, while to the lower portion of this circle,—where the pressure of the water is greater and the centrifugal action only the same,—the water will obtain more complete access, and will, consequently, offer more resistance to the rotation of the blades. It will follow, consequently, that the re-action against the blades of the screw will be less in the upper part of the disc or circle described by the blades, than in the lower part of the disc or circle described by the blades. And the screw will, under such circumstances, deflect the vessel out of her appointed track, in much the same way as if it was only immerged up to the axis. For the same reason, when the vessel is under way the action of the screw will give a twisting motion to the stern. There cannot, of course, be any absolute vacuity in the circuit described by the arms when the vessel is under way; and even in backing it is only in certain cases that such a vacuity can occur. But in all cases the blades will pass with less resistance through the superior part of their course than through the inferior part, as the water is more easily moved when there is little hydrostatic pressure above it. If these views be correct, it will follow, that a vessel with a deep screw will be able to back more effectually than a vessel with a superficial screw, and will also have less motion at the stern. A screw of three blades will also act more beneficially, so far as these disturbing influences are concerned, than a screw of two blades; since the impulse upon the vertical blade when at the lower part of the disc is balanced by the impulse upon the two other blades, which are at that time in the upper part of the disc. Screws of three blades, moreover, divide, better than screws of two blades, the momentary increase of the forward thrust which gives the serrated outline to the dynamometer diagram, and which is caused by the arms of the screw coming into the dead water in the rear of the stern post. They are also less affected by the roughness of the sea. But these points of superiority will be less conspicuous if the screw be deeply immerged; and under such conditions a screw of two blades is probably the best that can be employed. In screws of every kind it is necessary to take cognisance, not

merely of the diameter of the column of water acted upon, but also of the length of the column acted upon in a given time, which will of course vary with the speed of the vessel: for as the water resists the impulse of the screw by its inertia, and as the inertia is proportional to the mass or quantity of water acted upon, it will follow, that a column of small diameter will offer as much resistance in the case of a swift vessel as a column of large diameter in the case of a slow vessel, since in the swift vessel the screw acts upon a greater length of column in a given time. In the case of a vessel to which more engine power is applied, the slip of the screw will, it is true, be somewhat increased, as has already been explained at page 141.; but the slip will not be increased nearly so much as if an increase of the velocity of the advance were at the same time to be prevented by increasing the size or fullness of the vessel. In considering, therefore, the dimension of screw proper to be applied in conjunction with an engine of given power, it is proper to take cognisance of the speed at which the vessel is expected to sail, since if the character of the vessel be such that the progress through the water must necessarily be slow, a large diameter of screw must in such case be employed. It will also be obvious from these considerations how important it is to make the hulls of screw vessels sufficiently sharp and fine to enable them to pass with facility through the water, since not only is there a commercial disadvantage in the lower speed which a blunt form involves, but the screw, since it must act on a less extended column of water in a given time, must either be of larger diameter or be sunk deeper in the water; or if that cannot be, then the amount of slip will be increased. In towing, or in encountering head winds, the same evil is experienced; for, in consequence of the diminished speed of the vessel, the screw no longer acts upon the same quantity of water, and the effect is tantamount to a diminution of the screw's diameter. This effect, moreover, it is clear is independent of the injury arising from the centrifugal action of the screw, which may at times produce a hollow space in the water in the situation where the screw revolves, since with small immersions the water may not be able to approach the screw by gravity with the same velocity with which it is projected outwards by the centrifugal force. The action of sails in a screw vessel will virtually increase the diameter of the screw, by increasing the speed of the vessel and consequently the length of the column of water upon which the screw acts in a given time. The slip of the screw under such circumstances will be less, and the vessel will work more advantageously in every respect. In paddle vessels the same action must take place; but I am not aware that it has ever been pointed out.

Before concluding this chapter on the comparative merits of screws of different kinds, and which has drawn out to a greater length than I expected, I may briefly recapitulate the results obtained with Beattie's screw, as applied in the "Frankfort," a vessel plying between Liverpool and the Mediterranean. In this arrangement of screw, which is described at page 72. of the present work, the screw is placed behind the rudder, and the rudder is formed with an oval eye, through which the shaft of the propeller passes, while by means of the eye the continuity of the rudder is at the same time maintained. This arrangement of screw is said to obviate to a material extent the uneasy motion which screw vessels generally

have at the stern, and the performance of the vessel is certainly of a very superior character. I do not, however, attribute this superior performance so much to any peculiarity of the s as to the superior form of the vessel, since I find that other vessels built by the same makers and with screws of the ordinary arrangement manifest a similar efficiency. The "Frankfort" was built by Messrs. Reid and Co., of Port Glasgow, and was designed by Mr. John Wood, to whom the art of steam navigation is under such deep obligations, and whom other builders, in their happiest efforts, have only succeeded in imitating. The following particulars of the dimensions and performance of the "Frankfort" have been forwarded to me by Mr. Beattie: — Length of vessel, 190 feet; breadth of vessel, 27 feet 6 inches; depth of hold, 16 feet 6 inches; mean draught of water when tried, 13 feet 8 inches; area of immersed midship section, 330 square feet; displacement, 1150 tons; burden in tons, 657; diameter of cylinders, 40 inches; length of stroke, 34 inches; revolutions per minuite, 47; nominal power, 100 horses; diameter of screw, 13 feet; pitch of screw, 25 feet*; area of screw's disc, 122 square feet; ratio of midship section to screw's disc, 2·7; speed of screw, if working in a solid, 11·5 knots; speed of vessel, 9·75 knots; slip, 1·75 knot; mean pressure on piston, 19 lbs.; indicated or actual power, 386 horses; nominal power to midship section, 0·33; actual power to midship section, 1·17. Coefficients of performance assuming the speed to vary directly as the cube root of the power and inversely as the area of the midship section, $\frac{(\text{speed})^3 \times \text{midship section}}{\text{nominal power}} = 3058{\cdot}35$, and $\frac{(\text{speed})^3 \times \text{midship section}}{\text{indicated power}} = 792{\cdot}3$. These results it will be seen, on referring to the tables given in the Appendix, are superior, to any of the results obtained from the screw vessels of the navy. Among the screw vessels of the navy the largest coefficient obtained by multiplying the cube of the speed by the midship section and dividing by the indicated power is that of the "Rattler," which, under the best circumstances, was 676·7, as will appear on turning to the Appendix, page iii.; whereas the coefficient of the "Frankfort" is 792·3. The "Fairy," though a swift vessel, has a low coefficient, a result imputable mainly to her small size; and to make the results obtained with such vessels as the "Fairy" comparable with those obtained with larger vessels, a suitable allowance should be made for the difference of dimensions, as has been already explained at pages 144. and 148.

* This is a very coarse pitch for a screw of two blades and of 13 feet diameter. The vessel would certainly attain a higher speed with a finer pitch, but at the same time there would be a larger consumption of coals.

CHAPTER VI.

SCREW VESSELS WITH FULL POWER.

PADDLE vessels intended to maintain high rates of speed in ocean voyages of considerable length are usually furnished with engine power in the proportion of 1 horse power for every $2\frac{1}{2}$ tons burden, builder's measurement, and this is about the proportion of power to tonnage which obtains in the Cunard line of steamers plying upon the Atlantic. Very few screw vessels have been constructed with this proportion of power to tonnage except in the navy; and the forms of the vessels of the navy are in general so ill adapted for speed, that they do not enable such a comparison to be made between the two modes of propulsion as would otherwise have been afforded. The "Rattler," however, the "Desperate," and a few of the other screw vessels of the navy are of as eligible a shape as the common class of paddle vessels, and in their performance they manifest about an equal efficiency. In the "Dauntless" the proportion of power to tonnage is 1 to 2·88, and the maximum speed is 10·293 knots; in the "Desperate" the proportion of power to tonnage is 1 to 2·59, and the maximum speed is 10·766 knots; in the "Dwarf," a small vessel, the proportion of power to tonnage is 1 to 1·5, and the maximum speed is 10·537 knots; in the "Encounter" the proportion of power to tonnage is 1 to 2·64, and the maximum speed is 10·254 knots; in the "Fairy," a small vessel, the proportion of power to tonnage is 1 to 2·58, and the maximum speed is 13·324 knots; in the "Megæra" the proportion of power to tonnage is 1 to 3·7, and the maximum speed is 10·241 knots; in the "Niger" the proportion of power to tonnage is 1 to 2·68, and the maximum speed is 10·427 knots; in the "Rattler" the proportion of power to tonnage is 1 to 4·44, and the maximum speed is 10·074 knots; in the "Termagant" the proportion of power to tonnage is 1 to 2·5, and the maximum speed is 9·51 knots. In the screw steamer yacht "Fire Queen," constructed by Messrs. R. Napier and Co., of Glasgow, for Mr. Ashton Smith, the proportion of power to tonnage is 1 to 2·8, the power being 80 horses, and the burden in tons $227\frac{46}{94}$. In the French screw steam packet "Faon," constructed by M. Normand of Havre, after the designs of M. Moissard, naval engineer, to maintain the postal communication between Calais and Dover, the proportion of power to tonnage is somewhat greater than in the "Fairy," but the two vessels are in other respects very similar. The engines of both vessels are of 120 horse power; they were constructed by Messrs. Penn and Son of Greenwich, and are represented in one of the plates of the present work. The "Faon" is of the following dimensions: — Length between perpendiculars 132·8 feet, breadth of beam 20·3 feet, breadth at the load water line 19·68 feet, depth of hold 10·33 feet, draught of water forward 6·06 feet, draught of water aft 6·88 feet.

The displacement of the fore-body is 92·927 mètrical tons, and of the after-body 95·725 mètrical tons, making the total displacement 188·625 mètrical tons. A mètrical ton is a cubic mètre of water which weighs 2205·5 lbs., whereas an English ton is 2240 lbs., so that there is a slight difference between the two. A cubic mètre of water weighs 1000 kilogrammes, so that a kilogramme is 2·2055 lbs. The cylinders of the "Faon" are 42 inches diameter, and the length of the stroke is 3 feet. The pressure in the boilers is 14 lbs. per square inch, number of strokes of the engine per minute 40 to 42, number of revolutions of the screw per minute 200 to 210, pitch of the screw 7·7 feet, average speed of vessel 12 to 13 knots. The weight of the engines is 53 tons, weight of boilers 11 tons, mean time of the voyage, both ways, between Calais and Dover — the distance between the two places being 22 nautical miles — 3 hours 46 minutes, mean consumption of fuel on the voyage both ways 2 tons 15 cwt. 14 lbs. When the vessel is aided by sails the speed attained is 14 knots and upwards. Under sails alone, with the screw disconnected, the speed is from 9 to 9·5 knots, and with the screw not disconnected 5 to 5·5 knots.

The area of the immersed midship section of the "Faon" is 87·9 square feet, the area of the circumscribing parallelogram of the immersed midship section is 116·186 square feet, the area of the water line at the plane of flotation is 1744·495 square feet, the area of the parallelogram circumscribing the water line at the plane of flotation is 2614·294 square feet, the capacity of the immersed portion of the hull is 6583·812 cubic feet, and the capacity of the parallelopiped circumscribing the immersed portion of the hull 15331·472 cubic feet. The ratio of the length to the breadth at the water line is 6·75 to 1; the ratio of the immersed midship section to its circumscribing parallelogram is ·748 to 1; the ratio of the horizontal section at the water line to its circumscribing parallelogram is ·667 to 1; the capacity of the immersed portion of the hull to that of its circumscribing parallelopiped is ·426 to 1; the ratio of the length of the vessel to the square root of the area of the immersed section is 14·24 to 1. The number of nominal horses power for each square foot of immersed midship section is 1·36, and the number of cubic feet in the immersed portion of the hull for each nominal horse power is 54·865.

If the unbalanced pressure on the pistons of the "Faon" be taken at 15 lbs., then the multiple of gearing being 5, it follows that the same rotative pressure would be produced by 3 lbs. if the engines were connected immediately to the screw shaft. The stroke of the pistons being 3 feet, the pistons will travel 6 feet for every revolution made by the engines; and the pitch of the screw being 7·7 feet, the vessel would be advanced 7·7 feet by every revolution if the screw worked in a solid nut. If the pistons moved through 7·7 feet each revolution, the same revolving force would be given with a pressure of 2·34 as would be given with a pressure of 3 lbs. when the motion is 6 feet; for with any given unit of power the pressures and velocities will vary inversely as one another. Now the area of the pistons is 2771 square inches, and this area multiplied by 2·34 lbs. gives 6462·43 lbs. or 2·61 tons, which would be the amount of thrust exerted upon the screw shaft if the engines and screw worked without friction. But as probably about one-fourth of the power will be consumed

in friction, the actual thrust will, on this supposition, be about 1·96 tons, or 55 lbs. per square foot of immersed section. In the case of such a vessel, therefore, as the "Faon" or "Fairy," the resistance per square foot of immersed section may be set down as from 50 to 60 lbs., at a speed of 12 or 13 knots per hour. This is nearly double the amount of thrust per square foot of sectional area that would be necessary to propel the vessel at the rate of 10 knots an hour. The screw of the "Fairy" is 6·2 feet in diameter, so that it has an area of about 30 square feet; and taking the screw of the "Faon" at the same diameter, it follows that if the thrust be 1·96 tons, or 4846·8 lbs., the thrust per square foot of area in the screw's disc will be 161·5 lbs. The actual pressure per square foot of area of the screw's disc would very generally be more than this, since the unbalanced pressure on the pistons of the engine is under favourable circumstances more than 15 lbs. per square inch, as appears from *fig.* 181, which is an indicator diagram taken from the engines of the "Faon" during a trial of her speed on the 27th of May, 1847.

Fig. 181.

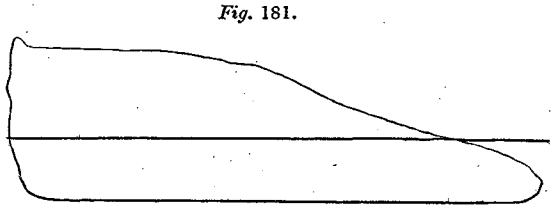

INDICATOR DIAGRAM OF FRENCH SCREW STEAMER "FAON."

The whole of the power generated in the cylinders of a screw-vessel is expended in producing three distinct effects: first, in overcoming the friction of the engines and of the screw; second, in propelling the vessel through the water; and, third, in giving motion to the water itself. Now, in any vessel to which a dynamometer has been applied, the amount of engine power consumed in producing each of these effects is easily determinable; for the difference between the theoretical thrust and the actual thrust of the screw shaft will represent the power consumed by friction; and the difference between the theoretical advance and the actual advance, per revolution or per hour, will represent the power consumed in slip or in producing motion in the water. If a screw of a very fine pitch be employed in any vessel, the friction of the screw revolving in the water will be greatly increased; but the power consumed in overcoming this friction will not, in such a case, be wholly lost, but will operate in reducing the slip by raising the surface of the water at the stern. The water adhering to the screw, or moved laterally by it, acquires a centrifugal motion, which naturally produces a bulge upon the surface; and this elevation of the water will give rise to a current which, impinging on the back of the screw, must influence the apparent slip, so that the slip will operate in reducing the velocity of this current or in reversing its direction, according as the velocity of the current or the amount of the slip may preponderate. The motion caused by the vessel in her progress through the water, and the current produced, especially in full vessels, by the effort of the water to fill the space which the vessel leaves by her advance, will also act in diminishing the apparent slip; but these influences will, in the same degree, increase the dynamometer pressure or diminish the speed, except when the vessel is aided by the action of the sails. In vessels, however, which employ sails, and at the same time are propelled by a large screw of a

fine pitch, — which will give a large amount of thrust and at the same time communicate, by friction, a considerable amount of centrifugal velocity to the water, which can only expend itself by raising the water surface, — it is obvious that the apparent slip may be reduced so much as to become nothing, or less than nothing, and accordingly the slip is occasionally found to be negative, especially under the circumstances recited. In screws of a very fine pitch, the actual dynamometer pressure will fall more short of the theoretical dynamometer pressure than in screws of a coarse pitch, as a greater proportion of the engine power will be arrested by friction and by lateral or rotative slip.

It will be obvious from these considerations, that the slip of a screw vessel is of two kinds. The first kind is that produced by the recession of the water in the direction of the vessel's wake, and is the same as that which exists in paddle vessels; the second kind is that caused by the arms of the screw passing in their rotation bodily through the water, instead of following that spiral track which, if they worked in a solid, they would be constrained to observe. The first species of slip will increase with the diminution of the screw's diameter; the second species will increase with the reduction of the length of the screw, or with an increase in the pitch of the blades. The amount of slip that will be produced by the recession of the column of water in which the screw acts, can readily be determined when we know the volume of water acted upon each revolution and the amount of moving force; for the slip will be equal to the motion which the force of the thrust acting during the time of one revolution would communicate to the number of pounds of water upon which the screw acts in one revolution. Taking, for example, an experiment made upon the "Minx" on the 30th of June, 1848, of which the particulars are given at page 136., the pressure on each square foot of area of the screw's disc will be found to be 214 lbs., the speed of the vessel being 8·445 knots per hour, and the number of revolutions of the screw per minute 231·32. If a knot be taken to be 6075·6 feet, then the distance advanced by the vessel, when the speed is 8·445 knots, will be 3·7 feet per revolution; and this advance will be made in about 0·26 of a second in time. Now the distance which a body will fall by gravity in ·26 of a second is 1·087 feet, and a weight of 214 lbs. put into motion by a pressure of 214 lbs. would therefore acquire a velocity of 1·087 feet during the time one revolution of the screw is being performed. The weight to be moved, however, is 3·7 cubic feet of water, or 231·25 lbs.; so that the velocity of recession will be somewhat less than 1·087 feet per revolution, or about 1 foot per revolution. This added to the progress of the vessel will make the distance advanced by the screw through the water 4·7 feet per revolution, leaving the difference between this and the pitch — namely, 1·13 feet — to be accounted for on the supposition of lateral slip. The total amount of slip in this experiment was 36·53 per cent., of which about one half may be set down as due to the recession of the water in the line of the vessel's track, and the rest as due to the lateral penetration of the screw blades.

The amount of backward motion communicated to the water, and also the amount of lateral penetration of the screw blades, will be much affected by the amount of the screw's

immersion. The water, in whatever way it may be moved, escapes in the direction of least resistance, which is, to the surface; and in proportion as the difficulty of escaping in this direction is increased by adding to the height of the column which must first be moved, the amount of motion imparted to the water by a given amount of force will be diminished. The slip in the same vessel, and with the same screw, will be nearly the same, whether the whole or a part of the power is applied; for although the thrust given by the screw is greater when the power is increased, the speed of the vessel, and consequently the volume of water acted upon by the screw in a given time, is greater also, so that the per centage of slip remains nearly the same. In vessels of a shallow draft, such as the "Faon" or "Fairy," where the screw cannot have any considerable height of water above it, and its mean immersion is necessarily small, the slip is much larger in proportion than in vessels even of a worse form, which have deeper screws. In the "Fairy" the ratio of the immersed midship section to the area of the screw's disc, is less than in the "Rattler;" nevertheless, in the "Fairy," the slip is upwards of 30 per cent., and in the "Rattler" it is not much more than 10 per cent. The resistance of the two vessels, per square foot of immersed section, may be reckoned pretty nearly equal, at the same speed; for the superior size of the "Rattler" is compensated by the superior sharpness of the "Fairy." If the screw shaft of the "Fairy" were to be sunk to the same depth in the water as the screw shaft of the "Rattler," her performance would be greatly amended, and a smaller screw, moreover, would then suffice.

In the experiments upon the "Pelican," the results of which have been recapitulated at much length in the preceding chapter, the normal speed taken for purposes of comparison is a mètre per second, or 1·94 knots per hour. The resistance of the vessel per square mètre of immersed midship section is estimated at 6 kilogrammes at this speed, which is equivalent to 1·22 lbs. per square foot. At a speed, therefore, of 9·7 knots, which is five times greater than the normal speed, the resistance per square foot will be increased nearly in the proportion of the square of 1 to the square of 5, or 25 times; and 25 times 1·22=30·5 lbs., which, according to this mode of estimation, would be the resistance of the vessel per square foot of immersed section at a speed of 9·7 knots per hour. It will be useful to compare this estimate with the results obtained in the "Rattler" by the aid of a dynamometer; and we may take for the purpose of comparison the first trial made between the "Rattler" and "Alecto," of which the main incidents are recorded at page 115. The immersed sectional area of the "Rattler" at the time of trial was about 380 square feet, and the thrust of the shaft, as shown by the dynamometer, was 3 tons 17 cwt. 3 qrs. 14 lbs., or 8722 lbs., when the speed was 9·2 knots per hour. This is 23 lbs. per square foot of section, which is somewhat less than the resistance of the "Pelican" as estimated by Messrs. Bourgois and Moll. In a subsequent trial, recorded at page 116, the resistance of the "Rattler" at a speed of 10 knots was found to be 25 lbs. per square foot of immersed section; but in this trial the progress of the vessel was slightly aided by the wind, though no sails were set.

The area of the four pistons of the "Rattler" is 5058 square inches, and the length of

the stroke is 4 feet. On the occasion of the first trial with the "Alecto," the total unbalanced pressure upon the pistons was 12·99 lbs.; the speed of the pistons was 190 feet per minute, the speed of the vessel 9·2 knots, and the slip 10·2 per cent., making the speed of the screw, supposing it to work in a solid, 10·22 knots. If, as before, we take a knot to be 6075·6 feet, then the speed with which the screw would propel the vessel, supposing it to work in a solid, or, in other words, the advance of the screw, will be 62,092·632 feet per hour, or 1034·8605 feet per minute. Now the total unbalanced pressure upon the pistons is $5058 \times 12{\cdot}99 = 65703{\cdot}42$ lbs., and this load is moved through 190 feet per minute, which is equivalent to 12,064·4 lbs. moved through 1034·8 feet per minute. This therefore represents a thrust upon the screw shaft of 5·38 tons, whereas the actual thrust shown by the dynamometer is 3·9 tons, so that nearly one-fourth of the motive force was, in this experiment, expended in overcoming the friction of the engines and screw. Again, in the sequel to the third trial recorded at page 116, when the speed of the vessel was 10 knots the slip was 11·2 per cent., making the speed or advance of the screw 11·12 knots per hour, or 1124·3445 feet per minute. The unbalanced pressure on the pistons was 13·07 lbs. per square inch, making the total pressure urging the pistons 66,108 lbs. The speed of the pistons was 208 feet per minute, and $66{,}108 \times 208 \div 1124{\cdot}3445 = 12{,}229$ lbs. or 5·46 tons, which would have been the pressure exhibited by the dynamometer if there were no friction in the engines or screw. The actual dynamometer pressure was 4·21 tons, so that in this case also nearly one-fourth of the motive force was lost from the friction of the engines and the screw.*

I have already stated that the results of the experiments made by Mr. Murray with the steamer "Dwarf," to determine the thrust exerted by the screw shaft with screws of different kinds, are not entitled to confidence, as there is a manifest fallacy in the dynamometer pressures recorded. A recapitulation of these experiments is given at page 135; and it will be useful to enter here into such an analysis of them as will prevent persons from being misled by Mr. Murray's errors. Now it is quite clear that if we suppose the screw to work in a solid nut, and that both screw and engines work without friction, the amount of thrust exerted by the screw with any given pressure upon the pistons will depend upon the relative speeds of the pistons and the screw; or, in other words, it is a question of virtual velocities, as in a crane, screw press, or any other mechanical combination. With any given pressure on the pistons, therefore, and any given pitch of the screw, the thrust will be a certain determinate amount which I have termed the theoretical thrust of the screw, and the effect of friction will be to diminish the amount of this theoretical thrust, and can in no case be to increase it. In all screw vessels, therefore, the actual thrust must be less than the theoretical thrust; but in the experiments upon the "Dwarf" it is in many instances set down as greater, and as this is an impossible result, those experiments are clearly unworthy of acceptation. I have computed the theoretical thrust in the whole of these expriments,

* Part of this diminution is due to lateral slip, but as the lateral slip may be exchanged for friction by increasing the length of the screw, it follows that the two elements are convertible.

from which, if some deduction be made for friction, such as I have found to be proper in other experiments, we shall arrive at an approximation to the actual thrust which must have been exerted. This computation is given in the following table: —

ANALYSIS OF EXPERIMENTS MADE WITH H.M. STEAMER "DWARF."

Number of Experiment.	Pitch of Screw.	Multiple of Gearing.	Pressure on Pistons as shown by Indicator.	Equivalent Pressure if Pistons acted direct on Screw Shaft.	Theoretical Thrust of Shaft on Dynamometer.	Alleged actual Thrust of Shaft shown by Dynamometer.	Probable actual Thrust of Shaft upon Dynamometer, about
	Feet.		Lbs.	Lbs.	Tons.	Tons.	Tons.
1	8	5·16	11·36	2·20	1·64	1·361	1·28
2	8	5·16	12·6	2·44	1·82	1·494	1·37
3	8	5·16	11·2	2·17	1·62	1·418	1·22
4	8	5·16	12·92	2·50	1·87	1·516	1·40
5	10·32	4·00	11·53	2·88	1·67	1·073	1·25
6	10·32	4·00	10·89	2·72	1·57	0·957	1·18
7	10·32	4·00	10·85	2·71	1·57	0·837	1·18
8	10·32	4·00	11·46	2·86	1·65	0·914	1·23
9	13·23	3·13	10·91	3·48	1·57	1·175	1·18
10	13·23	3·13	10·81	3·45	1·56	1·353	1·17
11	13·23	3·13	10·83	3·46	1·56	1·738	1·17
12	13·23	3·13	11·47	3·66	1·65	1·743	1·23
13	13·23	4·00	14·16	3·54	1·60	1·781	1·20
14	13·23	4·00	13·53	3·38	1·52	1·730	1·14
15	13·23	4·00	11·09	2·77	1·25	1·688	0·94
16	13·23	4·00	12·17	3·04	1·37	1·933	1·03
17	13·23	5·16	13·26	2·57	1·16	1·643	0·87
18	13·23	5·16	14·14	2·74	1·24	1·624	0·93
19	10·32	5·16	14·46	2·80	1·26	1·731	0·95
20	10·32	5·16	14·49	2·81	1·27	1·710	0·96
21	10·32	5·16	13·92	2·69	1·60	1·988	1·20
22	10·32	5·16	13·26	2·57	1·51	1·911	1·13
23	10·32	5·16	12·79	2·48	1·43	1·944	1·07
24	10·32	5·16	13·06	2·53	1·46	1·943	1·10
25	10·32	5·16	11·58	2·22	1·28	1·811	0·96

The area of the cylinders of the "Dwarf" is 2513·2, which multiplied by 2·20 lbs., the pressure which would give the same amount of power if the engines were connected directly with the screw shaft, as 11·36 lbs. will give with intervening gearing of 5·16 to 1, gives as a result 2·47 tons, supposing that the screw advances through twice the length of the stroke, or 64 inches each revolution; and this, on such a supposition, would be the theoretical thrust of the screw shaft in the first experiment. But the screw advances through 8 feet, or 96 inches, in each revolution, and the thrust will consequently be reduced in the proportion of 64 to 96, or it will become 1·64 tons. The immersed sectional area of the "Dwarf" at a mean draught of 6 feet 5 inches is about 60 square feet; and if we suppose the thrust to be reduced one-fourth by the friction of the engines and screw, the resistance per square foot of immersed section will still be about 45·8 lbs. per square foot, being double the resistance per square foot of section in the "Rattler," though the speed is only about the same, or rather not so great. This result is confirmatory of the doctrine already laid down of the greater proportionate resistance of small vessels than of large. Small vessels have a larger proportionate amount of rubbing surface; and in the case of vessels of similar form but of different dimensions, in order that the resistance per square foot of immersed section may

be the same, the speeds must vary as the square roots of any linear dimension, — the larger vessel having the largest speed.

In the experiments with the "Minx," recorded at page 136, we find that the results are such as to afford corroboration to the preceding deductions. The area of the two cylinders of the "Minx" is 1815·84 square inches, the length of the double stroke of the piston is $5\frac{1}{2}$ feet, and the multiple of the gearing 4. If we again take for comparison the experiment made on the 30th of June, 1848, with Smith's screw of a uniform pitch, we find the pressure in the cylinders to be 11·891 lbs. per square inch, which gives 21,592·15 lbs. as the total pressure urging the pistons. This is equivalent to a motive force of 5398·4 lbs. acting immediately upon the screw shaft; but as the length of the double stroke is 66 inches, and the pitch of the screw 70 inches, this pressure has to be further diminished in the proportion of 66 to 70, in order to give the theoretical thrust upon the screw shaft. Performing the operation here indicated, we shall find the theoretical thrust of the screw shaft to be 5089·5 lbs. or 2·27 tons; and if the deduction of one-fourth be made for friction, as in previous cases, the actual thrust by this mode of estimation will be 3817 lbs. or 1·70 tons. The actual thrust as indicated by the dynamometer during the experiment is 1·52 tons, so that the amount of friction, or of friction and lateral slip, is in this case somewhat more than one-fourth, as might have been anticipated from the much more rapid rotation of the screw than what answers to the progress of the vessel. In the "Faon" and "Fairy," and also in the "Dwarf," the friction of the screw and engines I have no doubt consumes somewhat more than one-fourth of the power; and the amount of the friction will increase in every case with the rapidity of the screw's rotation. The area of the immersed section of the "Minx" at a mean draught of 5 feet 3 inches, which was the mean draught in the experiments we have been considering, is 83 square feet, which gives as the resistance per square foot of immersed section 46 lbs., if we estimate the actual thrust as three-fourths of the theoretical thrust, and 41 lbs. if we take the thrust as actually exhibited by the dynamometer. The diameter of the screw being $4\frac{1}{2}$ feet, the area of the disc is 15·9 square feet, and the thrust as exhibited by the dynamometer is 214 lbs. per square foot in the area of the screw's disc.

By a report addressed to the French minister of marine, it appears that in 226 voyages of the "Faon" between Dover and Calais, performed in 1847, 1848, and 1849, the mean speed realized during all weathers was 12·3 knots per hour. The mean of the maximum speeds of the several different months was 14·82 knots, and the mean of the minimum speeds of the several different months was 8·76 knots. If the vessel had been furnished with paddle wheels, the maximum speed would have been at least as great, and the minimum speed would have been greater, and there would have also been a smaller consumption of fuel when the vessel had to encounter adverse winds. On a short voyage the large proportionate consumption of fuel in screw vessels, when encountering adverse winds, is of little comparative importance; but in the case of long voyages it is a vital question, and disqualifies screw vessels, I consider, at least as heretofore constructed, from carrying important mails to distant countries with advantage. Vessels employed upon such a service must be prepared to proceed at a considerable rate of speed against strong head winds if such occur,

and screw vessels will require to carry a larger reserve of coal than paddle vessels, in the proportion of their larger consumption of coal per hour when a head-wind is encountered. The discovery of a remedy for this imperfection of screw vessels is probably the most important problem connected with their improvement, and I shall here state in what way I consider the evil may be removed.

When a screw is set into revolution in a stationary vessel, the screw acts in nearly the same manner as a centrifugal fan, and the water will be drawn in on both sides near the centre of the screw, and forced out at both sides near the circumference, and also all round the circumference, as in a centrifugal pump or any similar centrifugal apparatus. The water in fact will follow some such direction as is indicated by the arrows in *fig.* 182, and at some such points as *a a*, the entering and emerging currents will balance one another, and the water will be stationary except in a radial direction. Now, what is wanted to be done in order to bring the screw under the conditions which obtain when the vessel is under sail, is to pass a current of water through the screw; and if we suppose a pump to be applied within the vessel which would force out a column of water of the same diameter as the screw itself, and at the same velocity as the usual progress of the vessel through the water, there would clearly be no more centrifugal action then produced by the screw when the vessel is stationary than is now usually produced when the vessel is under sail. Such a current, however, even if it could be conveniently created, would of itself occasion a large waste of power; and the main objects of endeavour must be to increase the difficulty of giving a centrifugal velocity to the water, and to make such provisions that any centrifugal velocity which the water receives shall be instrumental in the propulsion of the vessel. These objects will be best attained by sinking the screw deeply in the water, and by placing it much further forward in the deadwood than has been usual heretofore. It is obvious, if the screw be set deep in the water and also far forward in the deadwood, that it will require in the first place a very large velocity of rotation to overcome the inertia of the superincumbent water; and at the same time the water, if moved, as it will even then be to some extent, will, by its ascent upwards upon the inclined plane of the vessel's run, force the vessel forward in the water with considerable force. Two screws are upon the whole, in my opinion, preferable to one. They enable the necessary propelling area to be got at a greater depth, so that a smaller area in the screw's disc will suffice, and there will consequently be less friction caused by their revolution in the water. I consider that two screws, each of 5 feet diameter, will have about the same propelling efficacy as one screw of 10 feet diameter, although they have only half the area of disc, supposing the screws to be applied in each case at as great a depth as possible to vessels of the same draught. If, however, there is no impediment to the employment of vessels of a great draught of water, then one screw may be made very efficient, even though of small diameter, by constructing the vessel with a very deep dead wood, and placing the screw very far forward in it. Screw vessels constructed

Fig. 182.

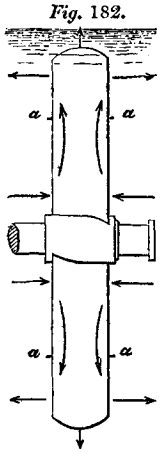

upon this principle will be able, I believe, to contend with head winds as effectually as paddle vessels, or perhaps more effectually; and I do not discern any practical impediment to the mode of construction here recommended. In the case of iron vessels, two screws may be very easily applied. The ends of the screw shafts may be effectually supported by projecting bosses or frameworks of plate iron built on to the ship, and those frameworks will experience very little resistance in passing through the water if they are made quite sharp before and behind, and are set at such an angle as to be in the line which the water naturally follows in entering the vessel's run.

In considering the amount of power necessary to be given to a screw vessel to propel her through the water with any given velocity, it is necessary first to settle the type of vessel, and next her size. When these points are determined it will be easy, by selecting from the tables of screw vessels given in the Appendix a vessel of the shape most nearly resembling that of the intended vessel, to tell the amount of power necessary to propel that vessel at any given speed, on the supposition that the two are of the same size. The co-efficient of performance of the vessel which the new vessel resembles, will be found by turning to the Appendix, page iii.; and the number of horses power necessary to accomplish any different speed, either of this vessel or of the new vessel, may be ascertained by multiplying the cube of the intended speed by the number of square feet of immersed section, and dividing by the co-efficient proper for this particular case. The result thus obtained, however, supposes that the new vessel is of the same size as the similar vessel; but if she be smaller than the model vessel the speed will be less, and if she be larger the speed will be more in the proportion of the square roots of the length or some other linear dimension of the two vessels. If S be the speed of the vessel in knots, A the area of the immersed midship section in square feet, C a numerical co-efficient, varying with the form of vessel, and P the indicated horse power, then $P = \frac{S^3A}{C}$, $C = \frac{S^3A}{P}$, and $S = \sqrt[3]{\frac{PC}{A}}$. By means of these equations, therefore, the power P necessary for the accomplishment of any prescribed speed, and the speed S which will be realized by the application of any given power, may be approximately determined. If the new speed be higher than the old, however, then the actual speed will be somewhat less than the theoretical speed as thus ascertained, since this rule proceeds upon the assumption that the resistance varies as the square of the speed, whereas in the case of vessels of a moderate sharpness, the resistance varies in a somewhat higher ratio than the square of the speed, as has already been explained at page 145.

To illustrate the influence of size upon the resistance or speed of a vessel, I shall compare the performance of the "Minx" with that of the "Rattler," the two vessels being of about the same sharpness, but of a different size, and also a different proportionate immersion. The length of the "Minx" is 131 feet, and the extreme breadth is 22 feet 1 inch. The length of the "Rattler" is 176 feet 6 inches, and the extreme breadth is 32 feet 8½ inches. The draught of water, however, in the "Rattler" is more than twice as great as the draught of water in the "Minx," so that the "Minx" has by much the largest amount of the rubbing surface per square foot of immersed section. At a speed of 10 knots the

resistance of the "Rattler" was found by the dynamometer to be 25 lbs. per square foot of immersed section; and at a speed of 8·445 knots the resistance of the "Minx" was found to be 41 lbs. per square foot of immersed section. If, therefore, the resistance be supposed to increase as the square of the velocity, the resistance per square foot of immersed section of the "Minx" would be about 71½ lbs., at a speed of 10 knots. This is considerably more than the amount of resistance that would have been experienced if the vessels had been of precisely the same form. The immersed section of the "Minx" in the experiment to which the speed and dynamometer pressure given above refer, was 83 square feet; and the square root of 83 is 9·1. The immersed section of the "Rattler" was about 380 square feet, the square root of which is 19·4. Now in similar vessels the square root of the sectional area will vary in the same proportion as any other linear dimension, and the speed will therefore vary inversely as the square root of that dimension. But if the speed vary as the square root of a dimension, and the resistance vary as the square of the speed, the resistance will vary as that dimension. In similar vessels, therefore, the resistance will vary inversely as the square root of the sectional area, or as 19·4 to 9·1, or 2·13 to 1 in the case under consideration. The resistance, therefore, per square foot in the immersed section of the "Minx" would, according to this mode of computation, be 53·25 lbs., whereas it appears to be more nearly 71·5 lbs. It may hence be inferred that flat and shallow vessels are very difficult to propel, and that the perimeter, or outline of the cross section in contact with the water, should be of the least possible length.

I shall now consider what would be the speed that would be attained by a vessel of the same form as the "Fairy," and the same proportion of power to tonnage, but of 3 times the length, and consequently of 9 times the area of immersed section, 27 times the capacity, and 9 times the power. The length of such a vessel would be 434 feet, the breadth 63 feet 4½ inches, the draught of water about 16½ feet, the area of the immersed section about 729 square feet, and the power 1080 horses. Now, as the lengths of the "Fairy" and of the new vessel are in the proportion of 1 to 3, the speeds will be in proportion of the square root of 1 to the square root of 3, or, in other words, the speed of the large vessel will be 1·73 times greater than the speed of the small vessel. If, therefore, the speed of the "Fairy" be 13 knots, the speed of the new vessel will be 22·49 knots, although the proportion of power to sectional area is in both vessels precisely the same. If the speed of the "Fairy" herself had to be increased to 22·49 knots, the power would have to be increased in the proportion of the cube of 13 to the cube of 22·49, or 5·2 times, which makes the power necessary to propel the "Fairy" at that speed, 624 horses power.

CHAPTER VII.

SCREW VESSELS WITH AUXILIARY POWER.

THE application of the screw as a propelling instrument to aid the progress of sailing ships is, in my judgment, its most valuable application; and if it be the fact, that vessels of this class are capable of carrying more cheaply, as well as more rapidly, than the ordinary class of sailing ships which are unprovided with auxiliary power, then the inference is inevitable, that the commerce of the world must henceforth be carried on by vessels of this description. It is certainly conceivable that, by the application of a certain proportion of steam power to accelerate the progress of sailing ships, so many more voyages may be performed in a given time as to increase the returns in a larger proportion than the use of steam power increases the expenses; and if it can be shown that this result is practically attained, then it follows that the vessels offering these advantages must supersede all others. It is not in calms alone that an auxiliary screw may be usefully employed; but, in light beam winds, it will enable the sails to intercept a new current of wind by the advance it gives to the vessel; and in strong winds it will, by its operation in virtually reducing the resistance of the hull, enable the vessel to use up the power of the wind more effectually, by preventing the rebound of the wind from the sails. An auxiliary screw, therefore, will not only operate in aiding the progress of the vessel to the extent of the velocity which it directly imparts, but it will further aid the progress of the vessel by enabling the sails to act with greater efficiency. A strong wind blowing against the side of a house gives no motive power to that house; and a strong wind blowing against the sails of a very slow sailing ship will impart very little motive power to the ship, but the wind will rebound from the surface of the sails with nearly its original velocity. The power imparted to a ship by the sails depends conjointly upon the amount of the pressure and the space through which the pressure acts in a given time; and if the motion of the vessel be very slow, the power communicated will be very small, whatever the pressure of the wind may be. If, however, the vessel has been already put in motion by the action of a screw, the pressure of the wind must act through a considerable space in any interval of time; and by the application of a screw, therefore, the efficacy of the sails will be increased in the proportion of the increased speed. It will follow, moreover, that the action of the sails will increase the efficacy of the screw; for, as the speed of the vessel will be increased by the sails, the screw will act upon a larger volume of water per revolution, and the slip of the screw will be thereby reduced. If a

screw vessel be set to encounter a head wind, it follows that, as the diminished advance compels the screw to act for a longer time upon the same water, the inertia of the water is inadequate to prevent the rotation of the blades in the manner of a centrifugal fan; and the thread which should be traced in the water being broken or stripped, there is necessarily a large amount of slip. When the progress of the vessel, however, is aided by sails, this action is reversed, and the screw operates, under such circumstances, in a more efficient manner than if the assistance of sails were not employed. In most vessels, therefore, which are fitted with an auxiliary screw, the engines are kept constantly at work, whether there is an absence of wind or whether the wind is favourable or adverse; for in strong favourable winds the screw enables the sails to extract more power from the wind, and in adverse winds the screw will enable the vessel to sail closer to the wind. Both of these effects, however, are equally producible by increasing the size of the hull; for an increase of the size of the hull has precisely the same operation as applying an auxiliary screw, so long as the vessel is under sail. The combination of the two expedients, however, will have the best effect; and very large sailing vessels of a very sharp build, and provided with a moderate amount of auxiliary power, will achieve as high a measure of speed as common paddle steamers of smaller dimensions, but of a far larger proportion of power to tonnage, under all circumstances, except when set to encounter head winds. It is quite possible, however, I consider, to construct sailing vessels which shall sail directly against the wind, and in time, no doubt, this improvement will be accomplished. Sailing vessels will then be able to perform their voyages without tacking, as is now done by paddle vessels of large power; and, if furnished with a screw, the screw will then be able to work with much the same efficiency, whatever be the direction of the wind relatively with the vessel's course.

At the time of the first introduction of screw vessels, I drew up an estimate of the comparative expenses of conveying a given quantity of merchandise in paddle vessels of full power, and in screw vessels of auxiliary power, and I deduced from thence the conclusion, that paddle vessels with a large proportion of power to tonnage must be abandoned in the coasting trade. The formation of coast lines of railways having had the effect of withdrawing from those vessels many of the first-class passengers, and also those finer articles of merchandise for the conveyance of which high rates of speed are alone of importance, it became clear that screw vessels maintaining a somewhat inferior speed, but capable of earning a profit at such low rates of freight as would not enable paddle vessels of full power to run at all, must be the only species of vessel that would be successful, and therefore the only species of vessel which could remain in use under the circumstances recited. The large increase of screw vessels since that time, and their gradual supercession of paddle vessels in the coasting trade, and in all other trades of a similar character, has confirmed the accuracy of these views; and paddle vessels, except for river navigation or the conveyance of important mails, appear likely, before long, to become only matters of history. The following is the estimate of the comparative cost of carrying merchandise in paddle and screw vessels which I made at the time referred to; and, notwithstanding the

improvements since introduced and the experience since acquired, I am not aware that it can be materially altered with advantage.

COMPARATIVE EXPENSE OF CONVEYING MERCHANDISE IN PADDLE VESSELS OF FULL POWER AND IN SCREW VESSELS OF AUXILIARY POWER.

If a paddle vessel of 1000 tons burden and 350 horses power, and a screw vessel of 300 tons, old measurement, and 50 horses power, be each set to perform a voyage of 500 miles, then the paddle vessel will perform the voyage in about 45½ hours, carrying 400 tons of cargo exclusive of her machinery and coals; and the screw vessel will perform the voyage in about 62 hours, carrying 400 tons of cargo exclusive of her machinery and coals. Each vessel will be able to make one double trip weekly, or 104 single trips per annum. The first cost of the paddle vessel will be about 40,000*l.*; the first cost of the screw vessel will be about 10,000*l.* In the paddle vessel the wages and the scale of the expenses altogether will be larger than in the screw vessel, which will partake more of the nature of a coasting ship. The approximate expense of each class of vessel is given underneath: —

Paddle Vessel.

	Per Annum. £	Per Trip. £ s. d.
Wear and tear 10 per cent. on 40,000*l.*	4000	
Depreciation 5 per cent.	2000	
Insurance 5 per cent.	2000	
Interest 5 per cent	2000	96 3 0
	£10,000	

	Per Month. £ s. d.	Per Trip. £ s. d.
Commander 25*l.* per month, and 6*s.* per day victualling	33 8 0	
Two mates, first 7*l.* and second 4*l.* per month, and 3*s.* 4*d.* per day victualling	22 4 0	
Two quarter-masters 3*l.* per month, and 1*s.* 6*d.* per day victualling	10 4 0	
Ten seamen 2*l.* 10*s.* per month, and 1*s.* 6*d.* per day victualling	46 0 0	
Carpenter 5*l.* per month, and 1*s.* 6*d.* per day victualling	7 2 0	
Three apprentices 16*s.* per month each, and 1*s.* 6*d.* per day victualling	8 14 0	26 11 0
Eleven firemen and trimmers 3*l.* per month, and 1*s.* 6*d.* per day victualling	56 2 0	
Two engineers, first 12*l.* per month, second 8*l.*, and 3*s.* 6*d.* per day victualling	28 16 0	
Wages and victualling per month	£212 10 0	

SCREW VESSEL.

	Per Annum. £	Per Trip. £ s. d.
Wear and tear 10 per cent. on 10,000*l.*	1000	
Depreciation 5 per cent.	500	
Insurance 5 per cent.	500	
Interest 5 per cent.	500	24 0 9¼
	£2500	

	Per Month. £ s. d.	Per Trip. £ s. d.
Captain 16*l.* per month, and 5*s.* per day victualling	23 0 0	
Mate 4*l.* per month, and 3*s.* 6*d.* per day victualling	8 18 6	
Six seamen 2*l.* 10*s.* per month, and 1*s.* 6*d.* per day victualling	27 12 0	
One apprentice 16*s.* per month, and 1*s.* 6*d.* per day victualling	2 18 0	
One engineer 8*l.* per month, and 3*s.* 6*d.* per day victualling	12 18 6	11 6 9
Three firemen and coal trimmers 3*l.* per month, and 1*s.* 6*d.* per day victualling	15 6 0	
Wages and victualling per month	£90 13 0	

SUMMARY OF EXPENSES.

PADDLE VESSEL.	Per Trip. £ s. d.
Wear and tear, depreciation, &c.	96 3 0
Wages and victualling	26 11 3
Coal, 60 tons at 15*s.*	45 0 0
Oil and tallow	5 0 0
Port charges, light dues, &c.	19 0 0
Sundry ship's stores	7 0 0
Expense per trip of paddle vessel	£198 14 3

SCREW VESSEL.	Per Trip. £ s. d.
Wear and tear, depreciation, &c.	24 0 9¼
Wages and victualling	11 6 9
Coal, 15 tons at 15*s.*	11 5 0
Oil and tallow	1 0 0
Port charges, light dues, &c.	8 0 0
Sundry ship's stores	5 0 0
Expense per trip of screw vessel	£60 12 6

Thus it appears that it will cost 198*l.* 14*s.* 3*d.* to transport 400 tons of merchandise through a distance of 500 miles with a full-powered paddle vessel, and that it will cost only 60*l.* 12*s.* 6½*d.* to transport the same merchandise through the same distance with a screw vessel of auxiliary power. The average speed of the paddle vessel would be 11 miles per hour, and the average speed of the screw vessel would be 8 miles per hour.

The working expenses of the paddle vessel given in the foregoing estimate, were verified by a comparison with the working expenses of paddle vessels of a similar size belonging to the Peninsular and Oriental Steam Company, taking of course into account the difference in the price of coals and other analogous circumstances. The expenses of the screw vessel

were not tested in a similar way by a comparison with a practical example, as, at the time the estimate was made, there was no practical example of a similar character available for the purpose. Within the last year, however, two screw vessels of a similar description to that which the estimate supposes, have been set upon a coasting line of 500 miles in length; and the following are the facts of their dimensions and performance, and of the cost of their maintenance and construction:—

The vessels are each about 424 tons old measurement, and 100 horses power. They each cost about 8000*l.* and are capable of carrying about 400 tons of cargo at a speed of about 9 knots an hour, and have repeatedly performed the voyage in 52 hours. The two vessels maintain a weekly communication; therefore each vessel makes a trip one way per week, but, if required, could make a trip both ways, or a complete voyage per week. Supposing a vessel to make a complete voyage per week, the expenses will be as follows:—

WAGES.

The Crew finding their own Provisions.

	Per Voyage. £	s.	d.
Captain	3	3	0
Mate	2	2	0
Second mate	1	10	0
Carpenter	1	5	0
Cook	1	5	0
2 quartermasters	2	7	0
4 seamen	4	4	0
2 boys	0	16	0
1st engineer	3	3	0
2nd engineer	2	2	0
4 stokers	4	4	0
1 coal trimmer	1	3	6
	£27	4	6

SUNDRIES.

	Per Voyage. £	s.	d.
Light dues	6	1	1
Port charges	2	0	0
Pilotage	3	2	0
Waterman	0	12	6
Cleaning flues	0	5	0
Taking away ashes	0	5	0
Water	0	7	6
Engine-room stores	6	0	0
Coals	35	0	0
	£53	16	0

CAPITAL ACCOUNT.

	Per Annum. £	Per Voyage. £	s.	d.
Wear and tear 10 per cent.	800			
Depreciation 5 per cent.	400			
Insurance 5 per cent.	400	38	9	$2\frac{3}{4}$
Interest 5 per cent.	400			

SUMMARY OF EXPENSES.

	Per Voyage. £	s.	d.	Per Trip. £	s.	d.
Wages	27	4	6	13	12	3
Sundries	53	16	0	26	18	0
Wear and tear, &c.	38	9	$2\frac{3}{4}$	19	4	$7\frac{3}{8}$
Total	£119	9	$8\frac{3}{4}$	£59	14	$10\frac{3}{8}$

Thus it appears that the expense of carrying 400 tons of cargo through 500 miles is 59*l.* 14*s.* $10\frac{3}{8}$*d.** instead of 60*l.* 12*s.* $6\frac{1}{2}$*d.*, which was my original estimate, and a somewhat higher rate of speed than I reckoned is also maintained. Now, if it be the fact that screw vessels can carry 400 tons through a distance of 500 miles at an expense of about 60*l.*, they can carry 400 tons through 1 mile for 28·8 pence, and 1 ton through 1 mile for 0·07 of a penny, or less than one-tenth of a penny per ton per mile. This is a far lower charge than railways can possibly carry at, and there does not, therefore, appear to be the smallest probability that railways will supersede coasting vessels in the conveyance of heavy articles of merchandize. On railways a penny a ton per mile is reckoned a low charge; but on lines 500 miles in length screw vessels can carry without loss for one-tenth of that amount.

The screw vessels, of which the particulars are above recorded, have been introduced in substitution of a line of sailing ships, by which a weekly communication between the same termini had previously been maintained. A comparison of the cost of conveying a given quantity of merchandize, therefore, by each class of vessel, will enable a tolerably just estimate to be formed of the comparative expense of conveying merchandize generally in screw and sailing vessels of the same proportionate size. The sailing vessels were of about 150 tons burden old measurement, but would each carry about 250 tons of cargo. It required five of them to maintain a weekly sailing, and the average duration of the voyage was 35 days. The cost of such vessels would be about 12*l.* per ton at the present time, though these particular vessels cost considerably more than that amount, and the total cost, therefore, of the five vessels would at this rate be 9000*l.* This is more than the cost of one of the screw steamers, which has been shown to be capable of performing the same number of voyages in the year as the five sailing vessels. The expenses of each of the sailing vessels per voyage was as follows:—

Wages.	£	*s.*	*d.*
1 captain	8	0	0
1 mate	5	5	0
1 carpenter	5	0	0
1 cook	4	10	0
1 second mate	4	5	0
4 seamen	16	0	0
4 apprentices	3	0	0
	£46	0	0

Sundries.	£	*s.*	*d.*
Victualling 13 men at 1*s.* 2*d.*	26	10	10
Pilotage and stores	2	15	0
Pilotage and towage	4	0	0
Light and port dues	5	14	2
	£39	0	0

* This is independent of the cost of loading and unloading, which will be about 6*d.* per ton in and 6*d.* per ton out, or 1*s.* per ton in and out.

CAPITAL ACCOUNT.

	Per Annum. £	Per Voyage. £ s. d.
Wear and tear 10 per cent.	900	
Depreciation 5 per cent.	450	
Insurance 5 per cent.	450	43 3 5½
Interest 5 per cent.	450	

SUMMARY OF EXPENSES.

	Per Voyage. £ s. d.	Per Trip. £ s. d.
Wages	46 0 0	23 0 0
Sundries	39 0 0	19 10 0
Wear and tear, &c.	43 3 5½	21 11 8¾
	£128 3 5½	£64 1 8¾

The expenses, therefore, per voyage of one of the sailing vessels is actually greater than the expenses per voyage of one of the screw steamers. But the sailing vessel only carries 250 tons, whereas the screw steamer carries 400 tons, which will further reduce the cost of conveyance per ton by the screw steamer. The screw steamer, however, will occasionally require to be laid up for repairs, whereas the five sailing vessels were sufficient to maintain the weekly communication without interruption. The screw steamer will also be more liable perhaps to accidents from collision, or at least such accidents will be more serious when they do occur. Taking all these circumstances, however, into account, it seems tolerably certain that screw vessels of the class described, will be able to convey merchandize at one-third less expense than sailing ships of the class described, and they will also carry it in a shorter time. The insurance upon sailing ships ought to be somewhat greater than upon screw steamers, but I have taken it at the same amount, namely, five per cent. Six per cent. is the insurance usually charged by underwriters; but any company or individual with a number of vessels, and insuring them himself, would be able to cover the risk by a charge on the capital of 5 per cent.

The foregoing estimate of the comparative expense of screw steamers and sailing ships, obtains corroboration from the results of Mr. Laming's experience of the trade between London and Rotterdam, as given in his evidence before a committee of the House of Lords on the African slave trade, in 1850. After the communication between the two ports mentioned had been maintained for a number of years by sailing ships, screw steam vessels with a moderate amount of power were introduced in substitution of them; and Mr. Laming states, that whereas with the sailing ships the expense incurred per ton burden throughout the voyage had been 1*l.* 12*s.* 5¼*d.*, in the case of the screw vessels the expense incurred per ton burden was only 19*s.* 6*d.* The details of Mr. Laming's statement are as follows:—

SAILING SHIPS.

LONDON.				ALKMAAR.				HOPE.			
136 Tons new measurement, cost at 20*l.* per ton, 2720*l.*				146 Tons new measurement, cost at 20*l.* per ton, 2920*l.*				125 Tons new measurement, cost at 20*l.* per ton, 2500*l.*			
Capital Account.	Per Annum. £	s.	d.	Per Voyage, 9 Voyages per Annum.	Per Annum. £	s.	d.	Per Voyage, 9 Voyages per Annum.	Per Annum. £	s.	d.	Per Voyage, 9 Voyages per Annum.
Interest, 5 per cent.	136	0	0	£72 10 8	146	0	0	£77 17 4	125	0	0	£66 13 4
Insurance, 6 per cent.	163	4	0		175	4	0		150	0	0	
Repairs, 5 per cent.	136	0	0		146	0	0		125	0	0	
Depreciation, 8 per cent.	217	12	0		233	12	0		200	0	0	
	£652	16	0		£700	16	0		£600	0	0	
Cost of Working.	Actual cost per Voyage.			Average cost per Voyage.	Actual cost per Voyage.			Average cost per Voyage.	Actual cost per Voyage.			Average cost per Voyage.
	£	s.	d.		£	s.	d.		£	s.	d.	
First voyage	191	16	0	£154 7 $4\frac{3}{4}$	154	8	4	£147 0 $2\frac{1}{2}$	210	5	1	£141 11 0
Second voyage	138	17	10		148	0	2		117	5	3	
Third voyage	125	10	2		138	16	11		136	3	9	
Fourth voyage	126	12	6		134	18	0		125	1	4	
Fifth voyage	189	0	6		158	17	7		118	19	8	

SCREW STEAMERS.

CITY OF LONDON.					CITY OF ROTTERDAM.					
166 Tons new measurement and 30 horses power, cost 8000*l.*					156 Tons new measurement, and 30 horses power, cost 8000*l.*					
Capital Account.	Per Annum. £	s.	d.	Per Voyage, 44 Voyages per Annum.	Capital Account.	Per Annum. £	s.	d.	Per Voyage, 44 Voyages per Annum.	
Interest, 5 per cent.	400	0	0	£38 3 $7\frac{1}{2}$	Interest, 5 per cent.	400	0	0	£38 3 $7\frac{1}{2}$	
Insurance, 6 per cent.	480	0	0		Insurance, 6 per cent.	480	0	0		
Repairs, 5 per cent.	400	0	0		Repairs, 5 per cent.	400	0	0		
Depreciation, 5 per cent.	400	0	0		Depreciation, 5 per cent.	400	0	0		
Cost of working.	Actual cost per Voyage.			Average cost per Voyage.	Cost of working.	Actual cost per Voyage.			Average cost per Voyage.	
	£	s.	d.			£	s.	d.		
First voyage	107	14	10	£112 6 $2\frac{1}{2}$	First voyage	99	14	8	£115 19 $2\frac{1}{4}$	
Second voyage	100	1	0		Second voyage	105	12	3		
Third voyage	103	18	2		Third voyage	129	17	2		
Fourth voyage	104	5	0		Fourth voyage	104	13	6		
Fifth voyage	108	14	0		Fifth voyage	122	16	3		
Sixth voyage	99	0	0		Sixth voyage	123	3	0		
Seventh voyage	119	12	0		Seventh voyage	119	7	11		
Eighth voyage	131	5	6		Eighth voyage	91	1	8		
Ninth voyage	118	8	5		Ninth voyage	115	3	4		
Tenth voyage	120	3	3		Tenth voyage	149	2	3		

COST PER TON PER VOYAGE.

	SAILING SHIPS.			SCREW STEAMERS.	
	London.	Alkmaar.	Hope.	City of London.	City of Rotterdam.
	£ s. d.	£ s. d.	£ s. d.	£ s. d.	£ s. d.
Capital account	0 10 8	0 10 8	0 10 8	0 4 10½	0 4 10½
Cost of working	1 2 8	1 0 1½	1 2 7¾	0 14 4¾	0 14 10¼
Total cost per ton, per voyage	1 13 4	1 10 9½	1 13 3¾	0 19 3¼	0 19 8¾
	Average of sailing ships - - - £1 12 5¾			Average of screw steamers £0 19 6	

The "City of London" and "City of Rotterdam" are vessels of the same size and power. Their principal dimensions are as follows: — Length between perpendiculars, 110 feet 6 inches; length on deck, 112 feet; length over all, 124 feet 6 inches; length of engine-room, 12 feet 6 inches; breadth inside of wale, 23 feet 2 inches; depth from top of keel to underside of deck, 11 feet 9 inches; burden in tons, builder's measurement, $275\frac{67}{94}$. The vessels were built by Messrs. Ditchburn and Mare, of Blackwall, and the average speed of the first six runs was 8·128 nautical miles per hour. The wear and tear is, I consider, taken by Mr. Laming in his estimate at somewhat too small an amount, but upon the whole his experience confirms the view, that screw vessels are capable of carrying merchandize at about one-third less expense than sailing vessels of the same carrying capacity, and at an increased rate of speed. The average speed realized by the "City of London" in performing voyages of the aggregate length of 13,327 nautical miles was 8 knots; the highest speed under canvas and steam was 10 knots, and the speed under steam alone was 7·5 knots. The average speed realized by the "City of Rotterdam" in performing voyages to the extent of 15,450 nautical miles was 8 knots; the highest speed under canvas and steam was 10 knots, and the speed under steam alone was 7·5 knots. In the "Lord John Russell" and "Sir Robert Peel," two similar vessels, but of somewhat larger size, the tonnage, builder's measurement, being $327\frac{91}{94}$, the speed attained was somewhat greater. The average speed realized by these vessels in performing voyages to the extent of 53,685 nautical miles was 8·5 knots; the highest speed under canvas and steam was 10·5 knots, and the speed under steam alone 8 knots. In the "Earl of Auckland," a screw vessel of about 450 tons and 60 horses power, the highest speed under steam and canvas was 12 knots, and the speed under steam alone 9 knots. The average speed attained by the screw steamers "Bosphorus," "Hellespont," and "Propontis," on the line between London and Constantinople, is exhibited in the subjoined table. These vessels are of about 530 tons, builder's measurement, and 80 horses power. They are able to carry 360 tons of cargo and 120 tons of coals, which is equal to 12 days' consumption. The greatest speed made under steam and sails differed

little from the greatest speed under sails alone, with the screw disconnected from the engine, and revolving freely in the water. This result necessarily ensues from the rapid increase in the resistance at high speeds; for at such speeds as 10 or 11 knots, all the additional thrust which a screw driven by 80 horses power could give would be insufficient to add materially to the speed.

SCREW STEAMERS BETWEEN LONDON AND CONSTANTINOPLE.

	BOSPHORUS.						HELLESPONT.				PROPONTIS.	
	First voyage out.	First voyage home.	Second voyage out.	Second voyage home.	Third voyage out.	Third voyage home.	First voyage out.	First voyage home.	Second voyage out.	Second voyage home.	First voyage out.	First voyage home.
	d. hrs. m.	d. hrs. m.	d. hrs. m.	d. hrs. m.	d. hrs. m.	d. hrs. m.	d. hrs. m.	d. hrs. m.	d. hrs. m.	d. hrs. m.	d. hrs. m.	d. hrs. m.
Time on passage	16 15 30	15 11 30	19 4 30	24 4 0	21 6 0	21 5 30	16 20 25	18 6 30	14 20 50	21 4 30	14 19 25	16 13 30
Time in port	1 14 30	10 23 30	1 11 0	17 10 0	1 9 0	11 17 30	2 15 35	13 10 0	1 11 0	11 20 0	2 21 30	14 19 0
Speed in knots	8·02	8·50	6·51	5·86	5·88	6·67	7·93	7·20	8·40	6·68	8·43	8·55
Whole duration of voyage	days. hrs. min. 44 17 0		days hrs. min. 62 5 30		days hrs. min. 55 14 0		days hrs. min. 51 4 30		days hrs. min. 49 8 20		days hrs. min. 49 1 45	

The mean speed exhibited during these voyages is 7·39 knots, and they were performed during the winter months.

On referring to the log-books of several other screw vessels of recent construction, I find that the average efficiency maintained is fully equal to the foregoing. Thus, in a voyage of the "Arno" from Liverpool to Genoa, commencing September 1. 1851, I find the average speed between Liverpool and Gibraltar to be about 9 knots by the log, with but little aid from the wind. When the vessel, however, proceeded on her voyage from Gibraltar to Genoa, and encountered a heavy head sea, the speed fell to 6 knots, but as an inconvenient quantity of water came upon deck, the engines were somewhat reduced in power by partially shutting off the steam, and the speed of the vessel then declined to 5 knots. In a voyage of the "Frankfort" from Liverpool to Palermo, commencing about the same time, — namely, on the 16th of September, 1851, — I find that the average speed attained, by the log, between Liverpool and Gibraltar, was 10 knots. Between Gibraltar and Genoa, there being very little wind, the speed was 9 knots throughout. The same speed was maintained on to Naples and Palermo. On the return voyage, the speed varied between $8\frac{1}{2}$ and 11 knots, according to the force and direction of the wind, until the vessel passed Gibraltar and entered the Bay of Biscay, when she encountered such strong head winds, and such a heavy head sea, that her speed was reduced to 4 knots. The engines, nevertheless, at this low speed of the vessel, continued to maintain nearly their former speed. When the speed of the vessel was 10 knots, the usual speed of the engines was about 50 revolutions per minute; and when, owing to the strength of the opposing winds, the speed of the vessel was reduced to 4 knots, the engine was only reduced to 46 revolutions per minute. The slip of the screw, and consequently the waste of power, was very great

when the vessel was placed in the circumstances recited; and the captain, finding this to be so, very properly tacked his vessel, whereby her speed through the water was increased to 7 knots, and a more effective action of the screw was consequently obtained. I believe that the "Frankfort" will be even less able than ordinary screw vessels to contend advantageously with a strong head wind, in consequence of the screw being situated behind the rudder, so that the volume of water raised upwards by the screw from its centrifugal action, when the speed of the vessel is arrested, will have less effect in forcing forward the vessel in the water. I believe that a revolving arm of any kind, if placed far forward in the deadwood, would propel a vessel, even though it imparted no thrust to the shaft at all, for it would lift the water up the inclined plane of the vessel's run, and thereby compel the vessel to move forward with great force. By this disposition of the screw, it appears to me that a great increase in its efficiency may be accomplished, and I believe that it would then form a more effectual propeller than the paddle, under all circumstances whatever. For, in proportion as the speed of the vessel was diminished, the centrifugal action of the screw would be increased, and a higher column of water would be raised against the inclined plane of the run to force the vessel forward in the water. The impelling area would no longer be the mere disc of the screw, but it would be the whole immersed sectional area of the vessel; and the pressure on this area would increase in precisely the same proportion as the necessity for it, or, in other words, it would increase in the same proportion as the resistance of the vessel. To enable this effect, however, to be produced in the most advantageous manner, it is clearly indispensable that the screw shall be placed very far forward in the dead-wood, or rather at the commencement of the vessel's run; since, if it be placed at the stern, nearly the whole force of the rising current, or, so to speak, the gravitation upwards of the water will be lost, as in all existing screw vessels is the case.

It will be obvious, from the general tenor of the preceding remarks, that screw vessels with auxiliary power afford the cheapest means of transport yet known, while, at the same time, they maintain a higher and more uniform rate of speed than sailing vessels. The whole of these advantages, however, must not be set down to the single innovation of the introduction of steam power, for much of it arises from the superior sharpness of the screw vessels, and also from their superior size to that of the vessels which they supplanted. To secure the largest measure of efficiency in screw vessels intended for the conveyance of cargo, they should be both very sharp and very large, and the screw should be set deep in the water and far forward in the run. They should also be broad at the water line, so as to give them sufficient stability to carry a large proportion of sail, and the rigging should be of such a character that it may be so disposed as to offer little resistance, if it be judged proper to set the vessel head to wind. The sails also should be laced to the spars, so as to be very flat when set, whereby the vessel would be able to go closer to the wind; and if there were holes in them, or if the sails were to be made in the manner of a Venetian blind, so as to let the wind pass through, I believe that the power of the vessel to

go close to the wind would be increased. The wind impinging upon a sail, being reflected from it at the angle of impact, must necessarily counteract, to some extent, the force of the succeeding stratum of wind with which it comes in contact, or change it from its proper course; and when a vessel is going close to the wind therefore, the aftermost part of the sail is of very little use, as, before the wind reaches it, it has, from the contact of the reflected wind, assumed the direction of the surface of the sail itself. A succession of

Fig. 183.

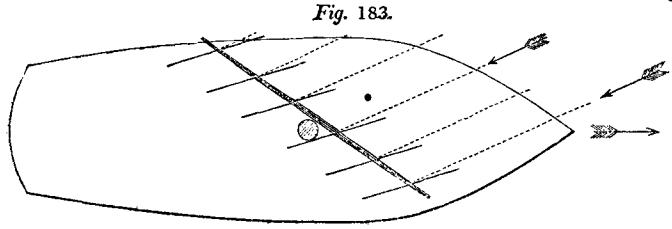

narrow sails, however, if set as in *fig.* 183., would be free from this disadvantage, and vessels fitted with sails on this principle would be able to go closer to the wind than if fitted in the ordinary manner. The smallness of a vessel's bow resistance relatively with the largeness of her lateral resistance, the absence of resistance from rigging or upper works, the flatness of the sails, and the freedom with which the wind can escape from the surface after impact, will determine the closeness with which the vessel can sail to the wind. It is found by experience, that the locomotive efficacy of the sails of a ship are increased by giving an elasticity to the rigging; and it would be desirable to make the mode of rigging such as to give this elasticity in an efficient and systematic manner. When the force of the wind is momentarily varying, as it generally is, it will follow that, since the velocity of the ship cannot vary in the same proportion, the wind, at the higher velocity, will be more reflected from the sails. But if the rigging have a certain measure of elasticity, the sails will be forced forward, at the higher velocity, to a greater extent than the ship herself, whereby there will be less rebound of the wind from the sails, and a greater proportion of its power will be utilised in propulsion. The recoil of the masts, when the force of the wind abates, maintains the forward pressure upon the ship at that time; and there is consequently a greater uniformity of propelling pressure, when elasticity is given to the rigging, and also a better result as regards the speed of the ship.

The comparative advantages of wood and iron as a material for building ships has, of late years, been debated with much intelligence and zeal. Both materials have their advantages, and both have their partizans; but, upon the whole, iron ships are certainly viewed with increasing favour, and it appears to me certain that, for most purposes of commercial intercommunication, they must supersede all others. Their main disadvantages are, that they get foul on the bottom much more speedily than wooden ships, that they vitiate the action of the compass, that they are too warm in hot climates and too cold in cold climates, and that, in latitudes where there is a great difference of temperature between the day and night, the saturation of the air in the hold with moisture during the

day, and the rapid transmission of the heat through the iron at night, causes a dew to form on the interior of the vessel, which may trickle down like the moisture on the interior of windows in crowded rooms, whereby the cargo may be damaged. In some cases, moreover, there is a good deal of internal corrosion in iron ships; and this takes place especially beneath the hatchways, from occasional showers of rain when the cargo is being taken out, and in the bilge from the action of the bilge water. The attrition caused, moreover, by bits of coal and clinker in the bilge, sometimes by degrees wears considerably the rivet heads; and in vessels carrying cattle in the hold, a good deal of internal corrosion is occasioned by the condensation of the moisture caused by the cattle's breath. On the other hand, wooden vessels are more subject to rapid decay than iron vessels, especially if the dry rot should happen to get into them; and, even apart from this accident, they are more expensive to keep in repair. They are also more subject to the ravages of insects, are more liable to injury from getting aground, and have other disadvantages which it is needless to enumerate more in detail; for the increasing dearth of timber, and the increasing cheapness of iron, from the successive improvements in its manufacture, are causes sufficient of themselves to compel the use of iron vessels in substitution of wooden ones, even if there were a greater disparity than there is in their respective merits. For all purposes of river navigation, for coasting voyages — especially if the vessels have to lie aground in tidal harbours, — for all purposes of communication in temperate climates when the growth of sea weeds and barnacles is not inordinately rapid, and for all purposes of communication, even in tropical climates, when the vessels can enter a river at one end of the voyage, or can get the bottom scraped without inconvenience, iron vessels are unquestionably the best adapted, and must, I consider, gradually supersede wooden vessels, wherever they may be employed in such services. As, however, I have fully recorded my opinions upon the comparative merits of wooden and iron ships, in the Appendix, I need not dwell here in much detail upon the subject. All vessels, whether of wood or iron, have heretofore been constructed most unscientifically, as nearly the whole strength has been given to the bottom and sides, and very little to the deck; whereas a ship should be regarded as a long hollow beam, which ought to be capable of being loaded in the middle with impunity, while supported at the ends, or loaded at the ends when supported in the middle. To enable a beam to endure such a strain with the least weight of materials, it is obvious that the strength should be concentrated chiefly at the top and bottom; and if we apply this rule to a ship, the deck should be as strong, or nearly so, as the bottom. So far is this rule from being observed, however, that the decks of a ship are, comparatively with the bottom, very thin and weak; and the planking, instead of being cogged or bolted, is only nailed to the beams. In paddle steamers, moreover, the deck is nearly cut across in the centre of the vessel to permit the revolution of the cranks, and in ships of every class it is greatly weakened by holes and hatchways. In fact, the deck is more regarded as a flooring to walk upon, or a roof to keep out the water, than as an integral part of the ship, upon which the longitudinal strength in a great measure depends; and the result is, that ships are much heavier and much weaker than it is neces-

sary they should be. I would propose to construct iron ships with an iron deck, so as to convert the ship into a tube closed at the ends, and I would put a frame only to every beam, and join beam and frame together, so as to form a hoop that would go round the interior of the vessel, as shown in *fig.* 184. The skin of the vessel, I would propose, should follow the outline of the frame, so that on each edge of the deck beneath the bulwark, there would be an angular space to make up, which, in wooden vessels, I would form of solid timber, and in iron vessels, of a triangular pipe of plate iron, so built as to form continuations of the sides and deck, and extending from the centre towards each end of the ship. Even in wooden vessels, I would propose to form the ribs of iron, the same in every respect as those I have suggested for iron ships; and the only difference between the two kinds of vessels would be, — that in one case the vessel would be plated with iron, and in the other case with wood. The wooden plating or planking I would propose to form of one thickness of Malabar teak, secured to the iron ribs by rivetted bolts, which would be copper below the water-line and iron above it; and this planking would be continued upon the deck as upon the sides and bottom, — the deck, sides, and bottom forming, in fact, a continuous surface. Wherever the deck has to be perforated, it should be strengthened round the hole by iron comings, of such a construction as to make up fully for the strength abstracted. To bind the planks together edgeways, and to prevent the longitudinal strain from coming upon the bolts, I would propose to run a waving grove upon the edges of each plank, as shown in *fig.* 185., and to insert in this grove a corrugated feather of zinked iron. This grove could easily be run by a proper machine devoted to that purpose; and the introduction of the metallic feather, which should be put in with white lead, and driven in very tight, would add to the tightness of the vessel, and would not in any way interfere with the proper caulking of the seam. It will be obvious that, by the use of feathers of this kind, the planks will be incapable of moving endways upon one another, and the vessel will, in fact, resemble a solid piece of wood which has been hollowed out. Wooden vessels constructed in this manner would be cheaper than common wooden vessels: they would also be stronger, lighter, and more durable, and would, in fact, be superior to common vessels in every respect.

Fig. 184.

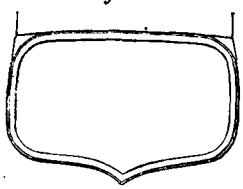

Fig. 185.

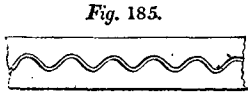

CHAPTER VIII.

SCREW STEAM VESSELS ON CANALS.

THE propulsion of vessels upon canals was one of the earliest applications of the Screw Propeller; but this particular application of the screw has not come into extended use in this country, though in America, and also in some parts of the Continent of Europe, it has been pretty widely adopted. Upon the whole, however, I do not consider screw propulsion on canals to be so eligible as some other modes of propulsion which could readily be introduced; and I do not believe, therefore, that it will gain any very wide acceptation, especially in the case of canals of contracted width. It will be proper to recapitulate, however, some of the results which have been obtained from this application of the screw; and I will subsequently explain in what way I consider steam propulsion upon canals may be accomplished in a more advantageous manner than will be possible where screws are employed.

The most successful screw vessels which have been constructed for plying on canals have been fitted with two screws, and in some cases the screws have been situated in the bow, but more generally they have been placed in the stern. An example of one of the most simple and effective arrangements of machinery for this purpose will be found in the engines of the French screw steamer "Étoile," represented in the plate of Direct-Acting Screw Engines, which accompanies the present work. The "Étoile" is 81 feet long upon deck, and 15·42 feet broad upon deck. Her draft of water is 3·2808 feet, and immersed midship section 34·445 square feet. She has one cylinder of 14·744 inches in diameter and 16·4 inches stroke. The engine is condensing, and the pressure of the steam is 30 lbs. per square inch. There is a screw set in each quarter, and the screws revolve in opposite directions. The screw shafts are connected by gearing to compel the screws to revolve in opposite directions, and also to keep the piston rod in the vertical position, since the wheels act in the same way as the wheels in Cartwright's parallel motion. The diameter of screw is 5·249 feet, and the pitch 11·155 feet. The steam is shut off from the cylinders after three-fourths of the stroke have been performed, and the engine makes from 60 to 80 revolutions per minute.

From some experiments made with the "Étoile" upon the canal of Arles in France, to ascertain the comparative advantage of carrying merchandize in the steamer herself, and in separate barges which the steamer tows, the conclusion was arrived at that it was more advantageous to carry the merchandize in the steamer. Two barges, each laden with 210 tons of coal, were attached to the "Étoile," which therefore acted in this instance as a tug;

but the slip of the screws, under such circumstances, became very great, having risen to as much as 70 per cent. The slip of the "Étoile" herself, in the same canal, when not towing anything, was only 30 per cent.; and it was reckoned that the slip in the case of an appropriate screw vessel laden with 200 tons of cargo would not have exceeded 35 to 40 per cent. There can be no doubt whatever that in all cases in which there is a considerable depth of water the resistance will be less — and therefore, with the same propelling apparatus, the slip will be less — when the cargo is put into a steam vessel of suitable construction than when put into barges which are towed astern; but the quantity of cargo which a steamer capable of plying in any ordinary canal can carry is very inconsiderable, and it is more expensive to conduct a number of separate vessels than a single long train.

The results of experiments made some years since with swift boats upon the Paisley canal, and which seemed to show that such boats were more easily hauled at the gallop than at the trot, led some persons to the conclusion that the resistance of vessels on canals does not increase with the velocity, but, in fact, rather diminishes. The experiments made by M. Morin upon some of the French canals by no means confirms this hypothesis; and he found that wherever a uniform speed is maintained, the resistance increases as the immersed midship section and the square of the velocity. It is the fact, nevertheless, that on narrow and shallow canals the resistance will be greater at low than at high speeds; for the wave created by the passage of the vessel through the canal travels at a determinate rate, depending mainly on the area of the canal, and if the vessel does not travel at the same velocity, a succession of waves will be raised, whereby much power will be expended. In deep and wide canals, however, the altitude of the wave with any given size of boat is less, and the velocity of translation is greater, so that the boat cannot overtake it, and even if she did, but little difference would be produced in the result. It follows, consequently, that upon the common class of canals, the speed, other things being equal, will vary nearly as the immersed section and the square of the velocity, as M. Morin found to be the case; but if the canal be narrow, or the speed high, the boat will be raised partially out of the water, and the immersed section will be decreased.

The resistance which any vessel will experience in a canal will be greater than that which she would experience in any large tract of open water, but the amount of this aggravated resistance relatively with the speed, will vary with the sectional area of the canal, or rather, with the sectional area of the canal relatively with that of the vessel. In canals of a small sectional area, the force of traction necessary will first go on increasing with the speed, and it will then diminish, and increase again if the speed be further augmented. With certain speeds, therefore, the resistance of a light and swift boat towed by horses will be greater in a large canal than in a small one; but the resistance which a vessel carrying heavy loads will sustain, will always be greatest in the canals of small width and depth. This is very clearly shown in the following table, which exhibits the resistance experienced by the "Étoile" in open water and in canals of different sections: —

Place of Experiment.	Section of Canal in Square Feet.	Ratio of Section of Canal to immersed Section of Vessel.	Slip of the Screw, per Cent.	Power exerted by the Engine, in Horses.	Speed of the Vessel, per Hour, in Statute Miles.	Resistance in lbs. of one Square Foot of Midship Section, at a Speed of 1 Metre, or 3·2808 Feet, per Second.
Roads of Havre - - - -	- -	- -	19	17	7·8	1·61
Canal of Arles - - -	396·115	11·5	30	17·7	6·2	2·66
Canal of Beaucaire - - -	286·322	8·3	30	15·8	6·0	2·82
Lateral Canal of the Loire - -	213·127	6·2	40	14·9	4·5	5·24
Canal of Briare - - -	118·4 to 139·9	3·4 to 4	- -	- -	3·6	

The experiments of M. Morin with light and swift boats upon the canals at Ourcq and St. Denis, showed that the resistance is also affected by the amount of rubbing surface of the bottom, and this quantity is independent of the speed. In the best examples of these boats, M. Morin found the resistance per square foot, at a speed of 3·2808 feet per second, to be 2·16 lbs. The resistance per square foot of moistened surface of the bottom he found to be about 0·043 lbs. per square foot. Putting, then, R to represent the whole resistance of the boat, S the extent of moistened surface of the bottom in square feet, K the resistance per square foot of immersed section in lbs., B^2 the area of the immersed section, and V the velocity, then $R = \cdot 043\ S \times K B^2 V^2$, or, in the best forms of boat tried, the expression would become $R = 0{\cdot}43\ S \times 2{\cdot}16\ B^2 V^2$. By applying this formula to the case of the "Étoile," we should obtain results differing from one another very much, according to the width of the canal, since the value of K, which is 1·61 in open water, becomes 5·24 in a contracted canal. In vessels of large size navigating the sea, the value of K is considerably less than 1·61 lbs. In the "Pelican" it is 1·22 lbs., and in larger and sharper vessels it has been ascertained by the dynamometer to be 0·92 lbs. The expense, therefore, of the propelling power upon canals must necessarily be very much greater than the expense upon deep rivers, or upon the sea, since the resistance is so much greater relatively with the work to be performed. The more contracted the canal, the greater does this difference become, as was made manifest by the great reduction of speed which the "Étoile" experienced upon entering the aqueducts of Digoin and of the Allier, and in some of the cuttings of the Central canal, where the section is reduced to 90 or 100 square feet. In these places the speed of the "Étoile" did not exceed $\frac{1}{2}$ a mile, or $\frac{3}{4}$ of a mile an hour.

In an intelligent tract on Canal Navigation, by M. Dubied, which has lately appeared in Paris, the author calculates that, by the employment of screw vessels of suitable construction, merchandize may be carried on canals, of average dimensions, at a speed of 3·1 miles an hour, for a farthing a ton per mile, and at a speed of 1·8 miles an hour, for one-fifth of a penny per ton per mile, or somewhat less than a farthing. On the largest class of canals, he proposes that each vessel shall carry 200 tons of merchandize besides the engine by which it is to be propelled; and on the smaller class of canals, he proposes that each vessel, in addition to its engine, shall carry 100 tons of merchandize. In the larger class of vessels, the required speed will, he considers, be attained by an engine of 11 or 12 horses power, and in the smaller class of vessels by an engine of 10 to 11 horses power. The speed

of 1·8 miles an hour may, he considers, be attained by means of an engine of 2 or 3 horses power, for attending upon which, a single stoker would be sufficient, and two sailors would be sufficient to manage the vessel. The boats he proposes should be made of iron and be decked. In some canals the weeds would occasion inconvenience to a screw vessel at the outset, as they would accumulate around the screws until they stopped the engines; but a scythe or mowing apparatus dragged astern of one of the vessels a few times would soon clear away these impediments, and the continued plying of the screw vessels would prevent the weeds from re-appearing.

The action of steam vessels upon the banks of canals has heretofore been one of the main objections to their employment in canal navigation, and it was found that when the "Étoile" attained a speed of 4·3 miles an hour, a wave was raised one foot high, extending from the bow to the middle of the vessel, and which broke upon each side upon the banks. This action, if long continued, would, it is clear, prove highly injurious to the banks, but it was proved, by the experiments in question, that this agitation of the water was produced solely by the progress of the vessel through the water, and not at all by the action of the screw, so that it would equally have happened if a vessel of the same dimensions had been dragged by horses at the same rate of speed. With either a lower speed or a smaller vessel the agitation of the water would not be so great, and the existence of a wave, under such circumstances, is not an argument against the employment of screw vessels on canals, but only against the adoption of such large dimensions, or such a high rate of speed, as will necessarily produce the inconvenience referred to.

Upon some of the canals of England, and also upon the Grand canal, and some other canals in Ireland, screw vessels have been lately introduced; and in most cases these vessels have been furnished with two screws, as in the case of the "Étoile." But although a certain measure of success has attended these innovations, yet, upon the whole, the introduction of steam vessels upon canals has not been attended with the measure of success that was expected. The cause of this result is not very difficult of perception. In any steam vessel of restricted width and length, but in which nevertheless a considerable rate of speed is intended to be maintained, the weight of the machinery and fuel must cause a considerable immersion; and upon all canals of the ordinary calibre, the large immersion of the hull will aggravate the resistance to a very serious extent, and correspondingly increase the cost of transport. At very low rates of speed, indeed, these evil effects will be less conspicuous, but at very low rates of speed, even very large barges may be drawn by two or three horses, and it appears to be hardly worth while employing a steam vessel for the purpose, unless a long train of barges could be towed at once. A long train of barges, however, would experience considerable delay at locks, for only one barge could generally pass through at a time, and the first barge of the train would have to wait until all the others had passed through, whereby greater delay would be caused than if each separate barge was dragged by horses. These impediments have hitherto prevented any very eminent success from being attained by steam vessels upon canals, and it appears to me

that vessels of the character heretofore used, whether propelled by screws or paddles, are not calculated to realize that measure of efficiency which is indispensable to a successful result.

I would propose to propel vessels on canals by means of a wheel running along the bottom, and so arranged as to be capable of rising and falling with the irregularities of the ground. This wheel would be driven by a steam engine, and would be armed at the periphery with projecting spikes, to prevent it from turning round without propelling the vessel. Wheels of this kind are in successful operation upon the Rhone, for propelling the steam vessels there employed against the rapid current of the river. They draw behind them very heavy loads; and as in canals there is a similar aggravation of the resistance to that which a vessel experiences when she ascends a rapid river, it appears to me that the mode of propulsion which has been successful in the one case is likely to be so in the other. By this mode of propulsion there is no slip, so that the whole power of the engine is beneficially expended whatever may be the resistance; and as the bottoms of canals are much more nearly level than the bottoms of rivers, the mode of propulsion suggested is more easily applicable in the former case. The difficulty of the locks, however, still remains, and I would propose to overcome it as follows: — I would make each steamer draw a train of boats, and I would have at least two trains a day — a passenger train and a luggage train. The boats for the passenger train would be made of plates of steel, and be formed in all other respects in the lightest possible manner. To prevent a wave of an injurious character from being formed by the rapid passage of the boat through the water, I would propose to make the boat very long, — in certain cases some hundreds of feet, — to make the bow and stern very much sharper than those of any other boats, and to make the bottom rise up gradually towards the bow and stern, until it came to the surface of the water, so that the water would in reality be displaced slowly, although the boat was proceeding at a considerable rate of speed. Instead, however, of making the boat in one piece, I would form it of several pieces, or of several distinct barges, which, when joined together, would form a train like a very long and sharp boat, so that the boat would be in no danger of breaking should it get aground, and would be able to accommodate itself to the bends of the canal. Each train would be provided with a very strong projecting gunwale; and, on arriving at a lock, the train would leave the water, and proceed from one level to the other on two rows of wheels fixed on the canal bank, on which the boats would hang by the gunwale and be drawn up by a chain. Boats of a construction similar to the foregoing were proposed by me several years ago for navigating the rivers of India, and there appears to be every probability that they will soon be used for that purpose.

CHAPTER IX.

COMPARISON OF DIFFERENT KINDS OF SCREW ENGINES.

Screw engines are divisible into two great classes — geared screw engines and direct-acting screw engines. In the first class the engines work at the usual speed of paddle engines, and the necessary velocity of rotation is imparted to the screw by the intervention of gearing. In the second class the engines are connected immediately to the screw shaft, and therefore make the same number of strokes per minute that the shaft makes of revolutions. Both kinds of engines are perfectly effective; but the geared engines have the merit of being twice or three times the size that would be necessary if the gearing were dispensed with, and twice or three times the weight. More bad direct-acting engines have no doubt been made than bad geared engines, and if the average efficacy of each kind be taken, therefore, it will probably appear that the geared engines have done the most work with least coal. But such irregularities of performance follow every considerable innovation, which a large acceleration of the speed of marine engines must be admitted to be, and the circumstance only shows, what indeed might have easily been predicted, that when engineers of various degrees of skill are set to the resolution of a given problem, some will speedily exhibit a greater proficiency than the rest, and only some will arrive at such a point of perfection as to warrant the substitution of their devices for existing modes of operation. The last step of progress, however, in any art is not represented by the worst expedient lately propounded, but by the best; and if we compare some of the best direct-acting screw engines with the best geared engines, we shall find that the direct acting engines have the advantage in every respect. In regard to performance, or in other words, to the power produced relatively with the fuel consumed, they are fully as efficient. The clearance spaces at the ends of the cylinders, and also the various ports and passages, have, it is true, to be filled with steam more frequently in the direct-acting engine, but then those several spaces are of proportionately less capacity, the cylinders being smaller in the proportion of the augmentation of the speed. The smaller dimensions of the cylinders in the direct-acting engine reduces considerably the loss from the condensation of the steam within the cylinders, and that the loss from this cause is not inconsiderable is proved by an experiment lately made, which shows that in engines provided with four cylinders, it is more advantageous to use a given quantity of steam with full pressure throughout the stroke in two cylinders, than to use the same steam in four cylinders, cutting off at half stroke, — the whole benefit of the expansion being more than counterbalanced by the increased cooling surface which four cylinders present. If the

same amount of cooling surface were to be presented by two large cylinders instead of four small ones, the result would be the same as in the case just recited; but if this be so, then slow moving engines of large size must be less economical than fast moving engines of the same power. It follows, therefore, that, other things being equal, direct-acting screw engines moving with a high speed, will be more economical in steam than geared engines, and should therefore be preferred on that ground for driving the screw, even if they had no other recommendation. In all other respects, however, direct-acting engines have a manifest superiority over those with gearing; nor can it be accounted a trivial benefit that an engine of given dimensions should be able to exert two or three times the power of another engine of the same size, or that an engine of a given power should be only half or one-third of the size and weight of another engine which only exerts the same power. These are the positions which direct-acting and screw engines respectively occupy, and it requires no very great penetration to see that geared screw engines must before long be universally discarded. What benefit do geared engines confer? what inconvenience do they obviate? I know of none whatever; and the reasons adduced by their apologists for persisting in their preference of them, appear to me to be utterly futile and chimerical. At one time, no doubt, the air pump valves presented an impediment to the realization of high speeds in condensing engines, but this inconvenience has been entirely surmounted by the introduction of Indian rubber discs, instead of the brass valves which had been previously employed, and in no direct-acting screw engines of proper construction do the air pumps now produce any shock, or occasion any inconvenience. With respect to the greater liability of engines moving with a high speed to heat in the bearings, that is a question not of speed alone, but of speed and area of bearing surface conjointly; for a fast bearing will be no more likely to heat than a slow one, if the area of bearing surface be adequately extended. It is clear, moreover, that the only part in which there are many large bearings, namely, the screw shaft, must revolve at a high velocity, whatever species of engine is employed; and if the bearings of that part of the machine can be maintained in efficiency, why may not the crank pin bearing — the only other bearing transmitting much strain, which it is necessary should move at a high rate of speed — be induced to exhibit a similar docility? In many vessels the wooden teeth of the geared wheels have speedily worn thin or shaken loose; but it would be unfair to impute those faults to the system of gearing, since they are obviously only faults of manufacture. In like manner it would be unfair to infer that the imperfections of certain direct-acting engines necessarily attach to the whole class; for although bad direct-acting engines have been made, good ones have been made also. It is quite certain, indeed, that good direct-acting engines are fully as efficient as engines with gearing; and if this be so, wherefore should gearing be employed? No doubt engineers who have not hitherto made direct-acting engines, or who have made only bad ones, will have a temptation to adhere to gearing as preferable to the uncertainties of an untried field, or of one in which they have not yet won any very eminent successes. But although certain engineers may have a temptation to adhere to antiquarian forms of mechanism, the public has no similar temp-

tation to adhere to *them;* and if they cannot or will not make direct-acting engines of an efficient description, the only result will be that the orders will go into other channels where the same antipathy to improvement does not exist. It is now beyond dispute that direct-acting engines, of an efficiency fully equal to that of geared engines, can be and are made. It is equally certain that direct-acting engines accomplish a material saving of space and weight, being in fact only one half or one third the size of geared engines. Why, then, should any one desiring to possess a screw vessel forego these advantages, when, by purchasing in another market, he may certainly obtain them? Direct-acting engines have less complication than screw engines, they are less expensive to construct, and, if properly made in the first instance, they will cost less for repairs. But the framing must be of great solidity, the bearings must be very long, and the whole of the keys and bolts about the engine must be of such a character that they cannot be shaken loose. With these simple precautions — in some cases heretofore neglected — the engines of screw vessels may be worked at a high rate of speed, with very little expense from wear and tear; and there can be no reason, therefore, why larger and heavier engines, with the additional complication of gearing, should be employed.

GEARED SCREW ENGINES.

Engines of the "Faon" and "Fairy." — These engines, constructed by Messrs. Penn and Son, and represented in Plate III., are, in most respects, identical with the form of oscillating engines which Messrs. Penn had previously introduced for paddle vessels, — the speed of the screw being brought up by a wheel and pinion to the velocity required. The thrust of the screw shaft was originally taken by a nipple of steel fitted into the end of the shaft, and which pressed against a plate of steel upon which a current of water could be directed. But it was found that the steel nipple became white hot, and actually welded itself on to the steel plate, although a stream of water was all the while directed upon the bearing. The same occurrence had previously happened in the "Rattler" when backing the engines. To receive the thrust when backing, a steel plate had been fitted to the stern-post behind the screw, and this plate was, of course, always immersed in the water. Nevertheless, the heat caused by the conjoint thrust and velocity became so great that the end of the shaft welded itself on to the plate, and tore it from the stern-post. These consequences arose from the bearing surfaces having been too small; and as the bearing surfaces are now made large, the pressure is distributed over a large area, and heating does not occur. The accident to the "Fairy" occurred when the Queen was ascending the Rhine, and fortunately Mr. Penn was himself on board. He immediately detached from the end of the shaft the remains of the steel nipple, and applied some pieces of brass in the situation of the steel plate, for the end of the shaft to press against. The end of the shaft having a much larger pressing area than the steel nipple, this arrangement was found to answer very well, and the vessel was enabled to pursue her course with scarcely any detention.

The oscillating engine of Messrs. Penn, being so well known in its application to paddle engines, need not be further described here; and I refer those desiring further information respecting it to my "Catechism of the Steam Engine," where a detailed account of this species of engine is given. Messrs. Penn and Son, I may add, do not now use geared engines for vessels even of the class of the "Faon" or "Fairy." In their most recent vessels, the "Argus" revenue cruizer of 60 horses power, and the "Sea-mew" cruizer, also of 60 horses power, the engine employed is Messrs. Penn's direct-acting trunk engine of the same construction as the engines of the "Arrogant" and "Encounter," represented in the Plate of direct-acting screw engines which accompanies the present work. The engines of the "Argus" are the same engines which Messrs. Penn contributed to the Great Exhibition. The screw of the "Argus" is 8 feet diameter, 9 feet pitch, and 19 inches long. The screw of the "Sea-mew" is 7 feet 10 inches diameter, 10 feet 3 inches pitch, and $20\frac{1}{2}$ inches long. In the Peruvian frigate, "Amazonas," fitted with engines of the same kind, of 300 horses power, the screw is 15 feet diameter, 15 feet pitch, and 2 feet 6 inches long. All these are screws of two blades.

Engines of the "Intrepid" and "Pioneer." — These engines, constructed by Messrs. James Watt and Co. (late Boulton, Watt, and Co.), are represented in the large plate of geared engines, in which all the other geared engines described will also be found which are not referred to as represented in a separate plate of the work. They are oscillating engines, resembling those of the "Fairy," but with a longer proportion of stroke, and with two air pumps worked by a beam instead of one air pump. The nominal power of these engines is 60 horses, and the actual power about 140 horses. The pressure of steam in the boiler is 13 lbs. per square inch. The number of square feet of heating surface in the boiler, to evaporate a cubic foot of water in the hour, is $9\frac{1}{2}$ square feet, and the evaporation of a cubic foot of water in the boiler produces, in the engines, from 1·25 to 1·4 actual horses power. The area of fire-bars, to evaporate a cubic foot of water in the hour, is ·433 square feet, and the sectional area of tubes, per cubic foot evaporated, is 8·5 square inches. The screw is about 8 feet diameter and 10 feet pitch, and the number of revolutions of the screw per minute is from 90 to 94.

Engines of the "Rattler." — These engines, constructed by Messrs. Maudslay, are upon their double-cylinder plan, which they have introduced to a considerable extent for paddle engines, but which have never been adopted by other makers, and which do not appear to me likely ever to come into extensive use. The thrust of the screw is received upon a cast-iron upright. The cylinders work in pairs, the pistons of each pair moving like one piston; and the air-pumps are wrought by means of levers connected with the hanging portion of the cylinder cross-head. This depending tail is guided between the cylinders, and from the bottom of it the connecting rod passes upward to turn the crank. There is a slide valve to each pair of cylinders, and it stands intermediately between the cylinders, but not in a line with their centres. The slide valves are cylindrical, and one of them is visible in elevation behind the descending part of the T cross-head.

Engines of the "Plumper." — The engines of the "Plumper," constructed by Messrs. Miller, Ravenhill, and Co., and represented in Plate IV. and also in the large Plate of geared screw engines, bear a close resemblance to the engines of the "Faon" and "Fairy;" but the pumps are worked in a different manner, and there is some difference also in several of the other details. Upon the whole, however, these engines must be classed with the engines of Messrs. Penn, which they nearly resemble, not merely in their form, but also in the excellent quality of their workmanship. Where gearing is used no form of engine is more unexceptionable than this, for it is compact and light and has little complication of parts.

Engines of the "Great Britain." — These engines are almost identical with the engines of the "Faon" and "Fairy," and of the "Plumper," in every respect except size; but the "Great Britain" has two air pumps inclined at an angle with one another, instead of a single air pump as in the case of smaller engines. The performance of the "Great Britain" with these engines is superior to her previous performance with engines of twice the nominal power. Without the aid of sails and with a full cargo she realizes a speed of fully 10 knots per hour.

Engines of the "Fire Queen." — These engines, which are of 80 horses power, are represented in Plates VI. and VII., and also, on a reduced scale, in the large Plate of geared screw engines. They were constructed, together with the vessel, by Mr. Robert Napier for Mr. Ashton Smith, and they are certainly among the best examples of engines of this class. This form of engine, it will be remarked, resembles the common land engine, but the beam and connecting rod are made of malleable iron instead of being made of cast iron, as in land engines is usually the case. The beam is composed of two thick malleable iron plates set on edge, and connected together by the various centres. The condenser is formed of malleable iron plates, and the air pump is of brass. The slide valve of the cylinder is of the three-ported description, but the steam escapes to the condenser through a hole in the back of the valve; and to prevent the steam in the valve-casing from escaping in the same direction, the hole in the back of the valve is surrounded by a metallic ring, which moves steam-tight on the back of the valve-casing, against which it may be pressed by springs. The effect of this arrangement is, to take the pressure from off the back of the valve, and the engine will consequently be more easily started or reversed, as the valve will be more easily moved. The whole of the parts of the engine are very substantial, perhaps a little too heavy in some parts; but the general arrangements are so judicious that it would be difficult to suggest any material improvement if this class of engine has to be used. The speed of the "Fire Queen" is fully 14 miles an hour.

Engines of the "Greenock." — These engines, constructed by Messrs. Rennie for H. M. S. "Wasp," and subsequently fitted on board H. M. S. "Greenock," are represented in the plate of geared engines. The cylinders are horizontal, in order that they may be kept below the water line; and the pistons give motion to a short shaft, upon which cog wheels are placed, which gear into pinions on the screw shaft and thereby put it into revolution. The

air pumps and the feed and bilge pumps are worked by levers, to which motion is imparted by eccentrics set on the short shaft referred to, and with which the piston rods are in connexion. The nature of this arrangement for working the air pumps will be made more obvious by *fig.* 186., which is a section of the air pump of the "Reynard." The valves are made of several thicknesses of canvas resting on gratings, and rising up against circular metallic guards of about the same diameter as the valves themselves, and of a cupped form. Air pump-valves of this kind would not now be made, but at the time of the construction of these engines they were the best kind known.

Fig. 188.

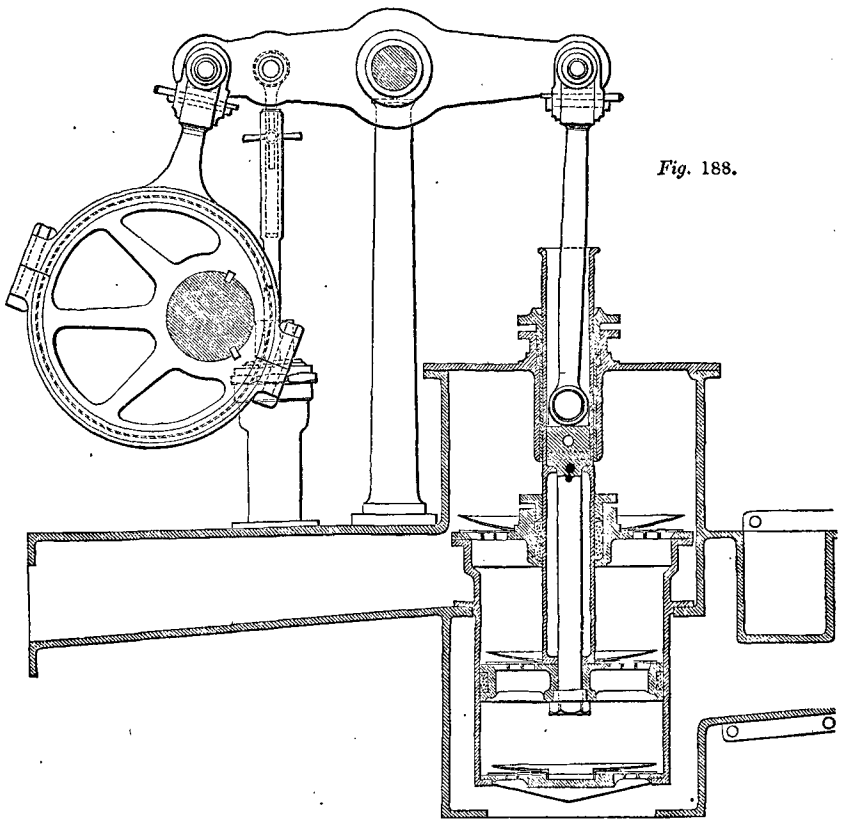

AIR PUMP OF THE "REYNARD."

Engines of the "Highflyer." — These engines, constructed by Messrs. Maudslay for H. M. S. "Highflyer," resemble the locomotive engine in their general arrangement. The framing consists merely of two rods which serve as guides to the piston-rod cross-head, and the air pump is wrought by a small crank at the end of the wheel shaft, the air-pump rod being formed of a pipe or trunk which permits the oscillation of a connecting rod within it, by the action of the crank on which the air-pump bucket is moved up and down. This engine, it will be understood, has two cylinders and two air pumps, though only one cylinder and one air pump are shown in the plan, from the engine being deficient in compactness, and therefore taking up more room than could be afforded. The stroke of this engine appears to me to be shorter than is advisable.

Engines of the "Sharkie." — These engines of 550 horses power were constructed by Messrs. Miller, Ravenhill, and Co. for the Egyptian frigate "Sharkie," and they are a good specimen of engines of this class. The air pumps are wrought by means of a curved prolongation of the crank pin, which has the effect of giving to the air pumps a shorter stroke than that of the engine pistons. The top of the piston rod is kept in the proper position by means of guides like the guides of a locomotive. There is no hot well, but the waste water

is conducted from the air pump at once overboard. A hot well appears to me to be a superfluity in all engines in which the waste-water passages are of adequate dimensions.

Engines of the "Termagant" and "Euphrates."—These engines of 620 horses power, constructed by Messrs. Seaward for H. M. S. "Termagant" and "Euphrates," have four cylinders, with the connecting rod interposed between the piston rod and the crank, as in locomotive engines; but the piston-rod cross-head is bent down very much so as to bring the forked ends of the connecting rod upon each side of the stuffing box, whereby a greater length of connecting rod is obtained. The air pumps are wrought off cranks on the wheel shafts, as in Messrs. Maudslay's and Messrs. Miller's arrangements.

Engines of the "Dauntless."—These engines, constructed by Mr. Robert Napier, are of 580 horses power, and the arrangements upon the whole nearly resemble those which Messrs. Miller have adopted in the "Sharkie;" but the air pump, instead of being wrought immediately off the recurved crank pin, has its stroke further diminished by the intervention of a lever. The several parts are constructed in a very substantial manner, and the piston rod is prolonged out through the bottom of the cylinder so as to take the weight of the piston off the side. The projecting rod is covered by a hollow cap.

Engines of the "City of Glasgow," "City of Manchester and Glasgow."—These engines, represented in Plate VIII., and also on a smaller scale in the large Plate of geared screw engines, are of the land-engine type, and very much resemble the engines constructed by Mr. Robert Napier for the "Fire Queen," but they are of course of larger size. The manner in which the thrust of the shaft is received will be seen by a reference to Plate VIII. The end of the shaft passes into a cistern of oil, between the side of which and the end of the shaft two discs of metal are interposed, which are strung upon a central bolt, so that they cannot shift sideways. The shaft presses against these discs; and if its friction upon the first disc is so considerable that it begins to heat and stick, it will follow that this disc will revolve with the shaft, and the rubbing surfaces will cease to be the end of the shaft and face of the first disc, but will become the back of the first disc and the front of the second disc. This transfer of the points of attrition enables the original surfaces to cool and resume their former condition, when they will be again called into action as before. The only difference between the engines of the "City of Manchester and Glasgow," and those of the "City of Glasgow," is, a slight difference of size, and some difference in the framing, the whole of the particulars of which are exhibited in Plate VIII.

Engines of the "Brisk."—These engines, constructed by Messrs. Scott, Sinclair, and Co., for H.M.S. "Brisk," bear a close resemblance to the engines of the "Dauntless," but are somewhat more complicated. Here, too, as in many engines of this class, there is no hot well. The thrust of the screw is received in the same manner as in the case of the "City of Glasgow's" engines, and this, it may be added, is now a common mode of receiving the thrust.

Engines of the "Bordeaux."—In the engines of the "Bordeaux," constructed by Messrs. Thomson, of Glasgow, we have two cylinders inclined to one another at an angle of 45°

operating upon one crank, and the crank pin, being recurved so as to diminish its throw at the extreme end, is there put in connexion with a lever by which the air pumps and the feed and bilge pumps are wrought. The link motion, it will be remarked, is employed for working the valves; and the general arrangement of the engines, and the adjustment of the details, manifest much judgment and aptitude in the art of mechanical combination. These engines having been constructed for a merchant vessel with auxiliary power, it was deemed unnecessary to keep them below the water line.

Engines of the "Correo."—In the engines of the "Correo," represented in Plate IX., the general arrangement is very similar to that of the engines of the "Bordeaux." The "Correo" is a wooden vessel 160 feet long, 22 feet 6 inches broad, 13 feet deep, and 11 feet draught of water. The area of her immersed section is 200 square feet, and her burden is 413 tons. She was built by Mr. John Brown, of Dundee, and the engines are by Messrs. Gourlay, Mudie, and Co., of Dundee. The diameter of the cylinders is $32\frac{1}{2}$ inches, length of stroke 32 inches, number of strokes per minute 45, nominal power 75 horses, diameter of screw 7 feet 6 inches, pitch of screw 8 feet 9 inches, number of blades 2, and number of revolutions per minute 120. The speed of the vessel is 10 knots without the aid of sails. There is only one air pump. The crank to which the piston rods are attached is a crank forged in the shaft like the cranked axle of a locomotive, and the air pump is wrought by a separate shorter crank, fixed on the end of the shaft for that purpose. The bilge pump is attached to one end of the air-pump cross-head, and the feed pump to the other end. It will be obvious from the plate that the engines are of a very simple and substantial construction.

Engines of the "European."—These engines, constructed by Messrs. Smith and Rodger, for the auxiliary screw steamer "European," are examples of a new type of engine, designed by that greatest of innovators in marine engineering, Mr. David Napier; and a considerable number of these engines have now been made by Messrs. Smith and Rodger, and other manufacturers. There are two cylinders, but in the ground plan given in the Plate, only one-half of the plan is introduced. Each piston is furnished with four piston rods, which ascend to a considerable height beyond the level of the screw shaft; and to the top of these rods a cross is applied, from the centre of which the connecting rod hangs, its lower end engaging the crank pin. This, therefore, is a variety of the steeple engine, the connecting rod being above the crank; and the upper end of the connecting rod works in guides, while its lower end follows the revolutions of the crank. There is an air pump to each engine, wrought by malleable iron levers, the ends of which are connected by links to the cross-head of the piston rod. The valve is three-ported and is moved by an eccentric situated immediately above it, and which revolves in a square brass that slides in a frame which permits the motion of the brass sideways, while the up and down motion constrains the frame itself to move, carrying with it the valve to which the frame is attached. This arrangement is adopted to overcome the inconvenience of a too short eccentric rod, which the combination would otherwise entail, and it is now very usual in the Clyde. The two air pumps, it will

be remarked, deliver into one hot well, from which the waste-water pipe proceeds, and the feed and bilge pumps are applied on each side of the air pump, and are worked by the air-pump cross-head, as is a very frequent and convenient practice. The thrust of the shaft is received upon a block of Babbit's metal immersed in a cistern of oil.

Engines of the "Biche" and "Sentinelle." — This arrangement of screw engines was designed by Mr. Holm, and the plan is one which exhibits great ingenuity. The two cylinders, it will be observed, are placed with their ends in contact, and each gives motion to a wheel which acts upon the pinion at the end of the screw shaft. Here each cylinder is furnished with two piston rods set diagonally, and from the ends of these rods a connecting rod reaches to the crank, as in the steeple engine; and, substantially, this is Mr. David Napier's engine laid upon its side, with two of the piston rods discarded. The condenser is beneath the cylinders, and the air pump is wrought by an arm extending from the cross-head, and has consequently the same stroke as the piston itself. The air pump is made with a solid piston and is double acting. Since air pumps have been provided with indian-rubber valves, the rapid motion of the air-pump piston has ceased to be a disadvantage, and there is no reason, therefore, why air pumps with the same stroke as the piston should not be employed.

DIRECT-ACTING SCREW ENGINES.

Engines of the "Simoom."— These engines, constructed by Messrs. James Watt and Co. (late Boulton, Watt, and Co.) for H. M. S. "Simoom," and represented in the large Plate of direct-acting engines, consist substantially of four oscillating cylinders laid upon their sides and with the piston rods communicating immediately with the screw shaft. Two piston rods are connected with one crank, and the other two piston rods with the other crank; and a crank in the intermediate shaft works the buckets of the air pumps which lie in an inclined position to one another, as is seen in the ground plan. The air pumps are omitted in the elevation with the view of obviating complication. The valves are wrought by means of the link motion, the double eccentrics necessary for which will be seen in the ground plan; and the expansion valves are wrought by means of elliptical cams upon the shaft, against which the ends of the rods are kept up by means of spiral springs enclosed in appropriate tubes. The valves are of the kind usual in oscillating engines, and the thrust of the screw shaft is taken off at a point intermediate between the engines and the stern post, so that no thrust is communicated through the engine shaft.

Engines of the "Niger."— These engines, constructed for H. M. S. "Niger" by Messrs. Maudslay, Sons, and Field, have also four cylinders, laid in a horizontal position; but here the cylinders are stationary, and the motion is imparted to the crank in a similar manner to that employed in the engines of the "Biche" and "Sentinelle" already described. Two piston rods emerge from each cylinder in different horizontal planes, so that one comes out above the level of the shaft and the other below the level of the shaft. The piston rods of

each pair of cylinders are connected with a cross-head, which is of course moved backwards and forwards in the space between the cylinder covers in the same manner as the pistons themselves; and from the cross-head a connecting rod passes to the crank and puts it into revolution. The cylinders upon the one side of the shaft are consequently nearer to the line of the keel than the cylinders upon the other side of the shaft, as space must be left on one side to enable the connecting rods to work, which on the other side is not required. The air pumps, which are also horizontal, are worked by an arrangement similar to that by which the motion of the pistons is communicated to the cranks. This species of engine resembles in some respects the engines of the "Amphion," represented in Plate XII.; and the engines of the "Amphion" I consider to be one of the best examples of direct-action engine hitherto produced, at least as regards its leading features; but the use of four cylinders and the abridgment of the stroke which distinguish the engines of the "Niger" are not in my judgment improvements. There is increased radiation of heat from the surface of the cylinders by this alteration, and increased complexity, while there is no countervailing advantage that I can discern. It will be remarked, by a reference to the ground plan of the engines of the "Niger," that the strain is taken at the end of the screw shaft, and it is therefore transmitted through the cranks of the engine. The cranks in such a case have to be made in a piece with the shaft. The valves are moved by the link motion, which is shown both on the elevation and ground plan; and each valve, which is of great breadth and in the plan nearly conceals the cylinder, is worked by two valve rods which stretch across from one cylinder to the other.

Engines of the "Arrogant" and "Encounter."—These engines, constructed by Messrs. John Penn and Son for H. M. S. "Arrogant" and "Encounter," are the first examples of a new class of engines which is now coming into use for driving the screw, and taken altogether these engines appear to me to be the best screw engines which have yet been constructed. This distinction, however, they do not owe altogether to the leading features of their arrangement, which, though very eligible, is by no means unexceptionable; but they owe it in a great measure to the admirable adjustment of the details—a quality in which Messrs. Penn's engines of every kind have long been unrivalled. There are two cylinders in these engines, which, as will be obvious from the Plate, are laid in a horizontal position; and passing through the centre of each cylinder, and cast in a piece with the piston, there is a large pipe or trunk, to the centre of which one end of the connecting rod is attached. As the piston is moved backwards and forwards by the steam, the end of the connecting rod necessarily partakes of the same motion, and consequently turns the crank, the trunk being of sufficient diameter to enable the connecting rod to follow the motion of the crank without coming into contact with the sides. The air pump, which is double acting and therefore made with a solid piston, is situated within the condenser, and lies in a horizontal position. Is is worked in a very simple manner by means of a rod which passes through the piston and cylinder cover opposite to the point where the air pump is placed. There are two air pumps, one to each cylinder; and as the air pumps are double acting, each is necessarily

provided with two suction or foot valves, and two forcing or delivery valves. Each of these valves consists of a number of indian-rubber discs set upon a brass plate, as is more fully explained in the ensuing chapter on the details of engines. The feed and bilge pumps are worked in the same manner as the air pumps, and consequently the whole of these pumps must have the same stroke as the piston. The valves are worked by means of the link motion, the arrangements of which are shown in the Plate. The steam escapes from the cylinder to the condenser through a large eduction pipe, which proceeds from the upper part of the valve casing, and slopes down to the condenser so as to enable any water, which might otherwise gather in it from the partial condensation of the steam, to run into the condenser by gravity. The cranks are forged in a piece with the shaft, and are both supported on each side of the connecting rod, a condition very necessary to the steady working of engines which move at a high speed, as an overhung crank is likely to twist the framing, so much at least as to make it unsteady, unless it be made of very great strength. The condenser with the air pumps within it is not nearly so wide as the cylinders, and therefore the eduction pipes converge as they approach the condenser.

The same objections which apply to engines with four cylinders, apply to a considerable extent to this engine also, for the trunks may be regarded as additional cylinders, so far as that they present a considerable extent of cooling surface to the air. Upon the whole, therefore, I consider that this engine would be improved if the trunk were discarded in favour of two piston rods arranged as in the "Amphion." The cylinders could then be brought nearer to the cranks and the length of the stroke might be increased, while the same amount of simplicity would still be preserved. Engines made upon this plan will, I am satisfied, be more economical in fuel than engines made with a trunk, and this is a paramount consideration to which others ought to yield.

Engines of the "Conflict." — These engines, constructed by Messrs. Seaward for H. M. S. "Conflict," are almost identical in design with the engines of the "Termagant" already described, except that they are without gearing. There are four cylinders lying in a horizontal position with connecting rods interposed between the cylinders and cranks as in locomotive engines, and two vertical air pumps of short stroke wrought by separate cranks in the screw shaft.

Engines of the "Vulcan," "Forth," "Seahorse," and "Megæra." — These engines, constructed by Messrs. Rennie, have also four horizontal cylinders, and in their leading features they are similar to the engines of the "Conflict"; but the air pumps lie at an angle with one another and are worked by a single crank at the end of the screw shaft. The condensers are tall flat chambers at the sides of the cylinders, and they box up the engines very much. The design, though evincing a good deal of ability in the adjustment of the details, is not one likely to find much imitation, especially as such engines would be expensive to construct.

Screw Engines by Messrs. Blyth. — These engines, which are of 450 horse power, and were intended for the propulsion of a screw frigate of 74 guns, exhibit, I consider, a large

measure of engineering ability. The cylinders, which are oscillating, are made with two piston rods, which is better than one in the case of high speeds; and the modification also enables the crank to come closer to the cylinder cover, in which indeed a recess may be made to permit its more near approach. The screw shaft, which lies at a lower level than the shafts of the engine, is turned by means of a triangular frame, and it will be obvious that in this combination there can be no dead point, since one piston is in the middle of its stroke when the other is at the end. It would be desirable, I think, to dispense with the cranks in the engine shafts for working the air pumps, and to work the air pumps from the cranks at the ends of the shafts, with recurved or eccentric crank pins. The engine shafts might then be made shorter, and in order that the steadiness of the framing might not be impaired, it might be made in a diagonal form, and the length of the bearings might also be increased.

Screw Engines by Messrs. Stothert and Slaughter.—The main peculiarity of these engines is, that the air pumps are worked at a lower speed than the engines, or make fewer strokes than the pistons. This object is accomplished by the interposition of gearing, which brings down the speed of the air-pump motion by the reverse of the arrangement used in geared engines for bringing up the speed of the screw. There are two cylinders placed in a diagonal position in a vertical plane at right angles with the keel. As both the cylinders stand at an angle of about 45° with a vertical line, and, therefore, at an angle of 90° with one another, the effect will be the same when the piston rods are connected with one crank, as when the piston rods of two parallel cylinders are connected with separate cranks standing at right angles with one another, and one crank for the two engines will therefore suffice. Instead of a crank, however, a disc of metal is here used with a projecting pin, and the shaft on which this disc of metal is fixed, gives motion to a pinion gearing into a larger wheel, on the side of which there is a pin which gives motion to horizontal rods in connexion with bell crank levers, which work the air pumps. The air pumps stand vertically in cisterns situated upon each side of the metal disc with which the pistons of the engines are connected.

This engine is not likely, in my opinion, to come into use. It has been contrived to overcome a difficulty which no longer exists, and the whole arrangement of the air pump machinery, therefore, involves superfluous complication. Before the introduction of Indian rubber valves for the air pumps, it might have been serviceable, but any such device as this is now too late. In the subordinate features of the plan I cannot discern anything that is likely to meet with imitation; nevertheless, the engine is very compact, and exhibits perfect capacity to deal with such combinations.

Engines of the "Frankfort."—These engines, constructed for the "Frankfort," by Messrs. J. and G. Thomson, are among the best examples of direct acting screw engines that we yet possess. They are simple, compact, and substantial, and upon the whole are a very eligible class of engines for merchant vessels, but for war vessels they, of course, would not be suitable, as they would come above the water-line. The general outline of the plan

resembles that employed by Mr. Nasmyth for working his forge hammer, but in the forge hammer the engine is, of course, single acting, and has no crank or connecting rod. It will be seen that there are two cylinders and two air pumps, with one hot well standing between them. The condenser is a large square vessel standing between the cylinders and hot well, and the eduction pipes from the cylinders enter it at the top, and an injection cock delivers water through the sides of the condenser opposite each eduction pipe. The whole of the other details are so obvious, from an inspection of the drawing, as not to require further description. The engine is regulated from the deck, as will be apparent from the position of the starting handles. These engines are of 40 inches diameter of cylinder, and 2 feet 9 inches stroke, and the pressure of the steam in the boiler is 16 lbs. per square inch. A good many engines upon a plan nearly resembling this, have been made by Messrs. Caird and Co., Messrs. Miller, Ravenhill and Co., and other makers.

Engines of Swedish steamer. — These engines, designed by Mr. Carlsund for a Swedish steamer, are the same, as regards the position of the cylinders, as the engines of Messrs. Stothert and Slaughter already described; but the air pumps are worked by arms extending from the piston rods, and have, therefore, the same length of stroke as the pistons themselves. The cylinders are fixed between two iron bulkheads extending across the vessel, whereby their weight and pressure are very effectually distributed over the hull. Mr. Carlsund's object in this arrangement of the cylinders was to enable the vessel to be made with a triangular cross section, and at the same time, to get the screw shaft kept as deep as possible in the water. This object the arrangement very effectually attains, while it is not exceptionable in other respects. The air pumps are situated within the condensers which are placed below the cylinders, and the connecting rods are forked, the piston rods being guided by their projecting ends, which pass through suitable eyes. The pistons are made cupped, and the cylinder covers are cupped also, so as to fit into the pistons, and to afford room for the stuffing boxes of the piston rods. The piston packings are formed in a different way than is usual in this country. Each piston is first made like a solid plug that will exactly fit the cylinder, and two grooves are then turned in it into which rings are fitted of a larger diameter than the cylinder itself, but with pieces cut out to enable them to enter the cylinder as is usually done in common packing rings, and the piston, with these rings upon it, is then forced into the cylinder. There is, therefore, no junk ring, and should the rings wear slack sideways, new ones must be substituted. The air pump valves are of brass, yet they are so constructed as to make very little noise, even when the engine is working at a speed of 120 revolutions per minute. This end is attained by making the lower part of the valve a cone, so that the ascending water meets it gradually, and opens it by degrees. As the valve opens it has to compress a spiral spring placed in a tube cast on the top of the valve, and this has the effect of closing the valve gradually, and without shock, as the pressure is withdrawn. I find that the recommendation to make the valves of pumps of cones instead of discs, so as to take off the shock, is given in Leupold's "Theatrum Machinarum," published in 1727, and the device probably is of great antiquity; but except

in the engines of this vessel, I do not know of any recent instance in which the idea has been practically applied. The wheel shown on the screw shaft and its accompanying pinion, are merely for the purpose of turning the engines round slowly by hand.

Engines of the "Princeton." — These engines, constructed by Merrick and Towne, after the designs of Ericsson for the United States war steamer "Princeton," are so fully described and delineated in Plate 10., that a brief notice of them here must suffice. Engines of this kind were contemplated by Mr. Watt, and are described in the specification of one of his patents taken out in the last century. But the engines of the "Princeton" were the first actual engines made upon this plan which rose above the dignity of toys. With so much novelty in the design, and apparent difficulty in the execution, even a very inferior performance might fairly have been accepted as a success. But the performance of the engines of the "Princeton" will bear a very favourable comparison with the performance of common engines, and I learn from Mr. Shock, to whom I am indebted for the details given in Plate X., that the old hull of the "Princeton" being worn out, a new hull has been built for the engines, which after the lapse of ten years are still found to be in excellent condition. The "Princeton" was the first vessel ever built with the engines below the water line, and Ericsson's object in fixing upon this species of engine, was to remove the apprehensions of those who were fearful that the momentum of the moving parts would, at so great a speed as was indispensable to any engine in direct connexion with the screw, speedily work the destruction of the machine. This idea is now known to be visionary, though the dregs of it still remain in the affection for geared engines which even still exists in some quarters.

It will be obvious, on an inspection of Plate X., that in this engine the piston moves like a door on its hinges, and the piston shaft, which answers to the hinge, by being prolonged beyond the steam chamber, gives motion by a reciprocating crank or short lever and accompanying connecting rod to the crank upon the screw shaft. The air pumps are at the opposite end of the engine, and derive their motion by means of short levers from the reciprocating piston shafts. The piston is made tight on all the four sides by metallic packing, for it will be observed that the piston shaft is not at the very edge of the piston, but only near the edge, and the small projecting portion works steam tight on the interior of the pipe which covers the piston shaft.

Engines of the "Étoile."—These engines are also, in all their material features, after the designs of Ericsson; and numerous barges and other vessels for canals have been constructed by Ericsson, in America, after this plan, most of them with high pressure engines. There is only one cylinder in this engine, and the rods, which answer to side rods in ordinary engines provided with a cross head, act here as connecting rods, and turn round the shafts with which they are connected, in opposite directions. The air pump is wrought in precisely the same way by cranks in the shafts that the cylinder uses to work cranks in the shaft. This is the simplest form of engine I have met with for giving motion to two screws, and for all vessels of shallow draft, and probably for all vessels whatever, two screws are better than one. If the engine is to be high pressure, the air pump and its accompanying gearing have only to be discarded, the rest of the engine remaining as before.

Engines of the "Minx." — These engines are high pressure. They were constructed by Messrs. Seaward and Capel, for H. M. S. "Minx," and resemble their larger engines with four cylinders, but with the alternate cylinders on the opposite sides left out. These engines are so simple, and all their arrangements are made so obvious by the drawing, that they do not stand in need of further explanation.

Screw Engines by Mr. Whitelaw. — These engines are substantially land engines with an unequally divided beam, the object of which is to reconcile the realisation of a long crank with a short stroke of the piston, whereby any inconvenient momentum of the moving parts will be obviated, while at the same time there will be no inconvenient amount of pressure thrown upon the screw shaft. The dangers of momentum are greatly exaggerated, and there is no difficulty in engines being worked at any velocity that the screw requires with the usual proportions of length of stroke. Nevertheless, timid engineers, whose faith in this doctrine is not very vigorous, will be desirous to have some species of compromise between the low and the high speeds, and this desideratum is afforded by Mr. Whitelaw's arrangement.

Engines of the "Pomone." — These engines, designed by Mr. Holm, are steeple engines laid upon their side; but there are two piston rods instead of one, and the bottom of the angular frame is rested upon a slide to take its weight off the piston rods. The air pump of each engine, which is also horizontal, is worked by a projecting arm from one end of the cross head, and it is made double acting. The "Pomone" is the first vessel that was constructed with double-acting air pumps laid in a horizontal position, and she is the second vessel constructed with the engines below the water line, the "Princeton" having been the first. The engines of this vessel are, in my judgment, a very excellent specimen of direct-acting screw engines; and even at the present time I do not think they could be materially improved. They are furnished with a very ingenious species of expansion valve; and a ring, moving steam-tight on the back of the valve casing, is fixed to the back of the valve to take the pressure off the valve face. The cylinders of these engines are of 46 inches diameter, and 46 inches stroke, and the engines make 40 revolutions per minute.

Disc Engine. — This engine, though a good many years have elapsed since it was first brought forward, has not hitherto come into very extensive use; and, indeed, very few engines of this class are in actual practical operation. The manner in which the engine works is not made readily intelligible to any one seeking to investigate the subject for the first time; but I will endeavour to explain its mode of action in a few words: —

A flat disc is set in a short horizontal cylinder with conical ends, and the apexes of the two cones meet in a large ball in the middle of the cylinder by which the disc is supported. A diaphragm rises from the lower side of the cylinder up to the ball, and a slit is cut from the circumference to the centre of the disc, so as to enable it to enter the cylinder, notwithstanding the existence of the diaphragm. The steam enters the cylinder upon one side of the diaphragm, and escapes at the other side, and when the disc bears upon the upper side of one cone it will bear upon the under side of the other cone. From the centre of the ball

an arm extends to the exterior of the cylinder, which arm communicates the motion of the disc to a crank placed to receive it. Now if we suppose the disc drawn up against the steam port, and that steam is then admitted, the steam will press on one side upon the diaphragm, and on the other side it will seek to pass the point of contact of the disc and cone; but as it cannot do this, it will force itself forward like a wedge, continually shifting the point of contact of the disc further back, and enlarging the space filled by the steam; an oscillating motion will thus be given to the disc which is communicated to the crank, and the action continues so long as the engine is supplied with steam. The first disc engines were both leaky and noisy, but these defects have been completely surmounted, and disc engines now work with quite as great economy of fuel as other engines, and with a more equable motion, which for some purposes is an advantage. For marine purposes, however, I do not think they are likely to come into use. An engine of large power, and working with the speed proper for the screw, would be of inconvenient diameter, and a nicety of workmanship is required in the construction of disc engines, which, even with all the aids afforded by modern tools and improved modes of working, it will be very difficult to obtain.

Engines of the "Amphion." — These engines, represented in Plate XII., are a species of steeple engine laid upon its side. Two piston rods emerge from the cylinder in different vertical planes, and also in different horizontal planes, and these piston rods are connected to a cross head moving in guides from which the connecting rod proceeds. An eye projecting upwards from the cross head receives the top of one piston rod and an eye projecting downward from the cross head receives the top of the other piston rod. *Fig.* 187. is a cross section of one of the cylinders and its valves. The two piston rods, it will be observed, are attached to the pistons by means of cutters, and the packing of the piston is metallic, consisting of an eccentric ring with a V block at the joining pressed forward by a flat spring. The valve is of the usual three-ported description but is made in two parts bolted together in order that a perforated plate may be introduced as an expansion valve, which is worked by a separate rod, passing through the valve cover. There is a ring applied to the back of the valve which moves steam-tight upon the back of the valve casing, and thus takes the pressure off the valve

Fig. 187.

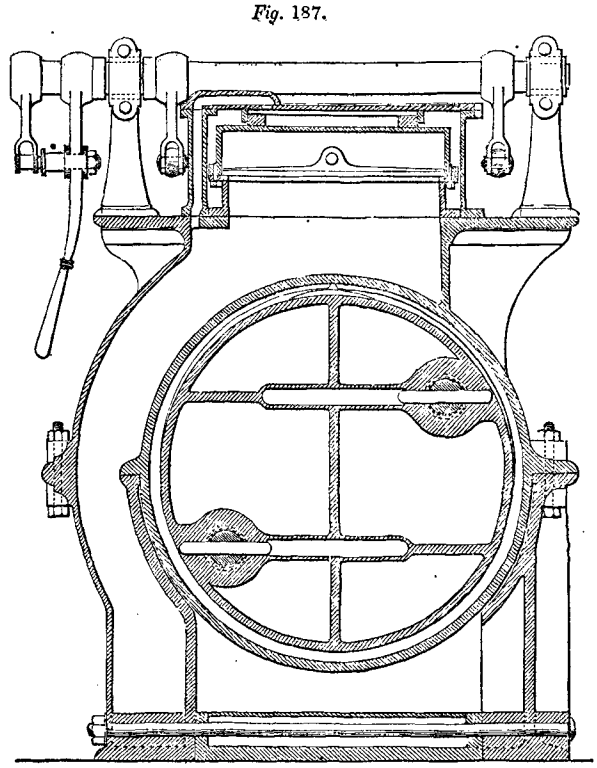

CROSS SECTION OF ONE OF THE CYLINDERS OF THE "AMPHION."

face, a communication between the space within this ring and the condenser being maintained by means of a small pipe shown in the figure which is introduced for that purpose.

Engines of the "Wasp." — These engines, represented in Plate XIII., are common oscillating engines, applied to drive a screw; but the screw shaft runs at a small angle with the water line, so as to enable the engines to be got below it. An arrangement of an endless screw working into a worm wheel placed on a short shaft, a pinion on which works into a wheel on the shaft of the engine, is employed for turning the engines by hand. The thrust of the screw shaft is received by a number of collars on the shaft, working into an appropriate bearing near the stern; and a handle with a suitable purchase is applied to enable this bearing, and with it the shaft, to be drawn back when the screw has to be raised out of the water. A vacant space between the shaft leading to the engine, and the shaft leading to the screw, will be remarked near this bearing; for the ends of the shaft do not abut, but a short pipe covers the intermediate space of such a construction, that the force of torsion is communicated from one shaft to the other, and yet the shaft next the screw can be moved on end.

Engines of the "Ajax." — These engines, represented in Plate XIV., are of the same construction as the engines of the "Niger," already described, and in the vertical section of the engines the points at which the piston rods emerge from the cylinders may be observed. The thrust of the screw shaft is received upon a cast iron upright, applied to the end of the shaft for that purpose. The stoke hole of this vessel was, in the first instance, excessively hot, and it has been found necessary to apply a supplementary engine to work a fan to cool it with a current of air.

These, then, comprehend all the remarks I have to make respecting the different kinds of engines, for giving motion to the screw. Upon the whole, I think most favourably of the arrangement in which the cylinders are laid upon their sides, and the motion is communicated to the crank by a connecting rod proceeding from two piston rods set diagonally, as in the engines of the "Amphion;" and an arrangement of this kind is one which I am persuaded will come into very extended use. No doubt the details of the "Amphion's" engines may be amended, but the general features of the arrangement are unexceptionable, and leave very little to be desired.

CHAPTER X.

DETAILS OF THE CONSTRUCTION OF SCREW ENGINES AND SHIPS.

In order that screw engines may work without inconvenience at the high rate of speed which is necessary to enable them to be attached immediately to the screw shaft, the air pumps must be fitted with indian-rubber valves, the bearings must be nearly twice the usual length, and the framing and every other fixed part of the machine must be of great strength and solidity. A short stroke of the piston throws a greater strain upon the crank pin and screw shaft bearings than a long stroke, and in engines working without a beam I consider it to be a disadvantageous arrangement to make the stroke of the piston very short, as is sometimes done to diminish the momentum of the piston. The momentum of the piston will be very little felt if it be received by cranks forged in a piece with the shaft, as in the axles of locomotive engines or by any other strong cranks that are well supported, but if received by an overhung crank pin like that represented at the end of the screw shaft in the engines of the "Wasp," shown in Plate XIII., a vibratory motion will be communicated to the framing at very high speeds, especially if the framing is not very strong or calculated to resist twisting. To diminish the momentum it will be advisable to make the pistons as light as possible, with which end they may be made of brass or malleable iron, and if the cylinders are oscillating, it will be useful to apply guides to the piston rod, or to make the piston rod very strong or double, as in Messrs. Blythe's arrangement, as some oscillating engines, when worked at a very high speed, have broken the piston rod off immediately below the cap which connects it with the crank pin.

Fig. 188.

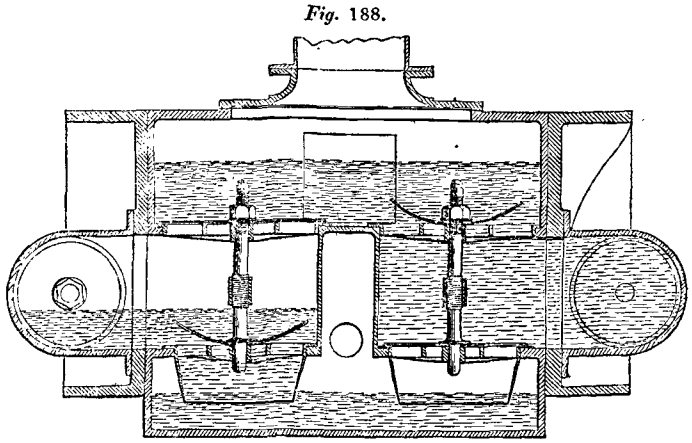

AIR PUMP VALVES OF H.M.S. "AMPHION."

Air pump valves.—The first improvement in the valves of the air pump to enable the engines to maintain a higher rate of speed was the introduction of canvass valves of the same size as the previous brass valves; and to these speedily succeeded numerous small disc valves of indian-rubber, which act so satisfactorily as to leave nothing further to be desired. *Figure* 188. represents the valves introduced in H.M.S. "Amphion," the first screw vessel constructed in this

country, with the engines below the water line and with the pistons maintaining a considerable rate of speed. The seats of these valves are kept in their places by means of rods screwed through cross heads extending from side to side of the condenser.

Figs. 189 and 190.

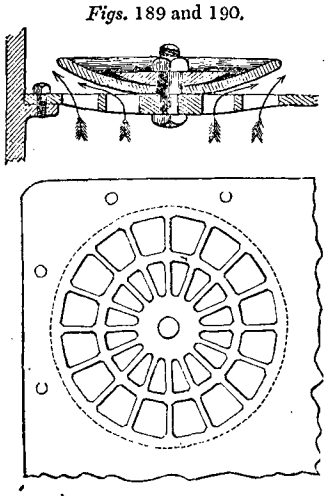

PENN'S DISC VALVE FOR AIR PUMP.

Fig. 189. is a section and *fig.* 190. a ground-plan of the species of valve used for the air pump by Messrs. Penn. The air pump is double acting, and is fitted with a solid piston, and for each foot valve and each delivery valvea plate is introduced with a number of grated perforations, such as in *fig.* 190., over each of which an indian-rubber disc is fitted, as shown in section, in *fig.* 189. The bent arrows show the direction followed by the water, and as the area afforded for the escape of the water by such numerous perforations is very great, the discs will be lifted only a correspondingly small distance from the plate. The number of these discs applied in substitution of each valve will vary with the size of the engine, but in an engine of 400 horse power the number will be about eight or nine. In such an engine, therefore, as there are two foot valves and two delivery valves to each air pump, and two air pumps to each engine, the total number of discs would be about sixty-four. *Fig.* 191 represents the kind of disc used by Messrs. Maudslay, and the only difference it presents is a somewhat different configuration of the guard. The guard should be so made as to come into contact with the metal of the grated plate when the bolt is screwed up, as it will not answer to put the strain of the bolt upon the Indian rubber, else a piece will be punched out. The Indian rubber discs are generally about 6 inches in diameter and about five eighths of an inch thick.

Fig. 191.

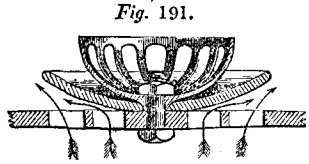

MAUDSLAY'S DISC VALVE FOR AIR PUMP.

Bearings of screw engines. — In Messrs. Penns' direct-acting screw engines the length of the bearings of the crank shaft is usually about twice their diameter, and the whole of the other bearings are also of extra length. The brasses are all lined with Babitt's metal, of which tin is the main constituent. Each brass is hollowed out so as to leave an indentation about a quarter of an inch deep for the reception of the soft metal; but a ledge is left all round the edge of the brass for the retention of the soft metal, and a mandril being then fitted in of the same size as the intended bearing, the melted metal is poured into the space which had previously been provided for its reception. In most screw engines the bearings are now made in this manner, but in some cases brass is not used at all, and the metal employed for the reception of the soft metal may be cast iron, which will answer as well as brass, the thickness of course being made somewhat greater, as the strength of the cast iron is less. In the engines of the "Wasp," represented in Plate XIII., the bearings of the screw shaft are of cast iron lined with soft metal, and the whole of the arrangements of the machinery of that vessel manifest great engineering ability. In all cases in which

soft metal is used in the bearings of engines I consider it to be a proper precaution to leave a sufficient width of the original bearing surface, whether it be brass or cast iron, to enable the engines to be worked even though the soft metal be melted out; for this is an accident which has occurred in several instances, both in engines with gearing and in direct-acting engines. It is proper, also, to lead a pipe along by the side of the screw shaft, as shown in Plate XIII., with a cock opening upon each shaft bearing, so that a stream of water may be directed upon it should any tendency to heating be exhibited; and a short hose and spout pipe should be attached to some convenient part of the engines, in order that a column of water may be directed upon any working part of the engines which shows a disposition to get hot. The bearing most difficult to cool or lubricate in an efficient manner is the crank pin, and various modes of accomplishing its lubrication in an efficient manner have been projected; but the best mode upon the whole appears to be the application of a small pipe revolving like a crank, through which a supply of oil may be conducted; or where such a pipe cannot be applied conveniently, a small hole may be drilled through the length of the crank itself, through which the oil may be conveyed. In nearly all cases, however, it will be possible to apply a small pipe, one end of which turns in an appropriate socket in the line of the shaft centre, while the other end empties into an oil cup at the top of the connecting rod, which, however, is not fitted with any wick or tube. This pipe may be fed from a small oil cistern of a sufficient height to cause the oil to flow through the bearing by hydrostatic pressure, and a cock in the pipe adjacent to the cistern will regulate the supply. The same pipe may also be used to transmit water if desirable, and with such an arrangement there will be no danger of the bearing heating, so long as the supply of oil is maintained. Messrs. Maudslay, in some of their recent vessels, accomplish the lubrication of the crank-pin bearings, by fitting to the end of each connecting rod a sort of funnel with an inclined plane fixed upon one side. The oil cups are fixed in holes in a stationary cross bar attached to the engine framing over the cranks, and from the bottom of each oil cup a worsted wick depends, which sucks the oil up out of the cup by capillary attraction in the usual manner, and brings it in a drop to the end of the hanging thread. The funnel attached to the crank comes in contact with the thread at each revolution, and the oil is deposited upon the inclined plane on the side of the funnel, and runs into the funnel by gravity. It would be preferable, I consider, to let a drop or small stream of oil descend into the cup at each revolution, when the crank reaches the highest part of its revolution; and there would be no difficulty in causing the engine, at each revolution, to open a small cock or valve, so that any desired quantity of oil should descend at the proper moment, to enter the funnel which conducts the oil to the bearing. In the "Queen of the South" and some of their other recent screw vessels, Messrs. Maudslay make the brasses of the crank shaft in four pieces, the upper and lower parts being closed by a cap in the usual manner, and the side pieces being closed by wedges drawn up by bolts passing through the caps. In the engines of these vessels the cylinders lie at an angle of 45°, and work up to a single crank

as in the engines of the "Bordeaux," or in the arrangements of Messrs. Stothert and Slaughter and Carlsund.

In most screw engines, whether working at a high or low speed, the bearings are supplied with oil in the manner usual in paddle vessels; but the resources there obtaining do not appear to me to be of sufficient efficacy, especially in the case of swift vessels with the engines working at a very high speed: and as the heating of journals is a very serious inconvenience in any case in which it occurs, and as the propensity to heat is aggravated by the velocity of the rubbing surface, it appears to me to be quite indispensable that, in screw vessels with direct-acting engines, not only should there be a much larger proportion of bearing surface, so as to diminish the pressure on any given area in the proportion of the increased velocity, but that the most effectual means of lubrication and refrigeration should also be provided. Large oil cups, with many wicks or orifices, will satisfy these conditions in all situations in which the oil cups can be conveniently examined or replenished; case, to be provided, which will enable any quantity of oil to be supplied to this bearing but in the case of the crank-pin bearing, this cannot be done; and means ought, in every that may be desired, without the necessity of slowing the engines for the purpose. The particular arrangement which should be adopted for this purpose will, in some measure, depend upon the configuration of the engine to which expedients for lubrication have to be applied; but, in most cases, one or other of the arrangements which have been suggested may be employed.

To enable access to be conveniently obtained, at all times, to the bearings of the screw shaft, it is necessary to surround it by a sheet-iron pipe or tunnel passing through the hold, of a sufficient size to enable a man to enter. It is a good arrangement, as a means of keeping these bearings cool, to prolong the length of the bearing sufficiently to enable a recess to be left in the cast-iron plummer block, near each end, for the reception of water to circulate round the shaft, and, by thus always keeping the shaft on each side of the bearing effectually cooled, the bearing itself will be prevented from heating. Under this arrangement, it will be proper to have a supply pipe for water as before recommended, and also a return pipe passing to some appropriate part of the engine-room. A constant circulation of water will thus be maintained around those parts of the shaft which are most contiguous to the bearings, whereby the shaft will be kept cool without the necessity of any water except what escapes by leakage entering the hold. The necessary receptacle for the water may, it is clear, be formed by constructing the plummer blocks with faucet ends, into which glands are fitted which do not penetrate to the bottom of the hollow space, but leave room for an annulus of water upon each side of the bearing surface. Whatever arrangements, however, may be employed for this purpose, it is proper to provide that the water which escapes at the bearings of the shaft shall be conducted into the engine compartment without any of it being spilled in the hold.

Modes of receiving the thrust of the screw. — The mode of receiving the thrust of the screw by the interposition of a series of moveable discs between the end of the shaft and some

fixed point within the vessel has been already explained, and in *fig.* 192. a representation is given of such a combination. A cast-iron box, attached to any convenient part of the bottom of the ship, has another box fitted within it so as to be capable of sliding backwards and forwards, and to be adjusted in any position by the key B. Within this box a series of discs (A) are set, composed of brass and iron alternately, and upon these discs the end of the shaft presses. The cistern may then be filled up with oil. When this mode of receiving the thrust is employed, it is necessary to apply a plate to the stern-post, to receive the thrust when the engine is backed, and it is advisable that there should be at least one disc there also. A more usual way, however, of receiving the thrust of the shaft, than by the application of discs, is by the use of a number of projecting collars formed on the shaft, and which fit into a plummer block properly hollowed for their reception, as has been already explained in describing the engines of the "Wasp." A perspective representation of a bearing of this description is given in *fig.* 193., and the same bearing with the cap removed is shown in *fig.* 194. In *fig.* 195. is represented a portion of the shaft itself with its projecting collars. These collars are formed by turning out of the solid iron the intervening depressions. They are each about an inch high, with about an inch of distance between them, and they are somewhat rounded at the corners instead of being cut quite square. Each collar is supplied with oil by means of a wick connected with an oil cistern on the top of the plummer block, and a groove is cut across the top of the upper brass to enable the several compartments to communicate, so that, if one fails in its supply of oil, it may be recruited from the next adjoining. This bearing, and indeed all others, about screw engines moving with any considerable speed, is usually lined with Babitt's metal. With this arrangement for receiving the thrust, a backing plate on the rudder post is not required; nevertheless, it will

Fig. 192.

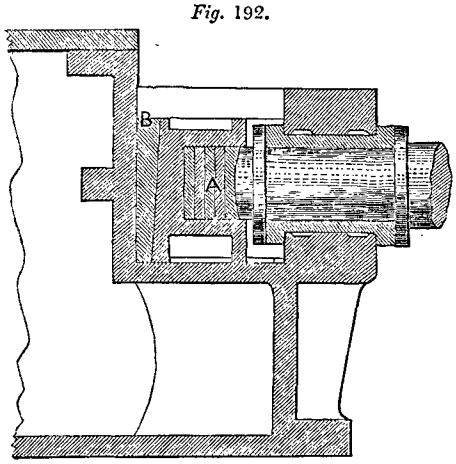

END OF THE SCREW SHAFT OF THE "CORREO," SHOWING THE MODE OF RECEIVING THE THRUST.

Fig. 193.

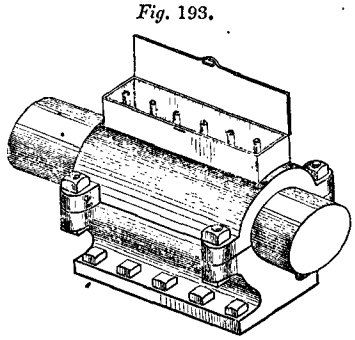

PLUMMER BLOCK FOR RECEIVING THRUST OF SCREW AS USED BY MESSRS. PENN.

Fig. 194.

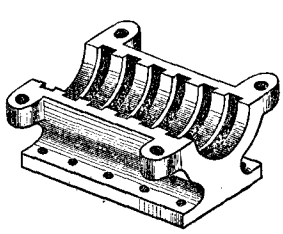

PLUMMER BLOCK WITH CAP REMOVED.

Fig. 195.

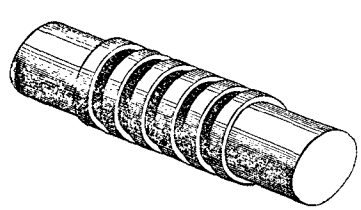

COLLARS ON SHAFT FOR RECEIVING THRUST.

be useful to apply one if the bearing for receiving the thrust be made moveable, as is sometimes done to enable the shaft to be drawn easily on end; for the plummer block might accidentally slip back if the engine be moved after the catch is detached, and the end of the screw shaft would then bore into the rudder post, and, of course, occasion injury.

Stuffing box and pipe for carrying the screw shaft through the stern.—*Figs.* 196. and 197.

Fig. 196.

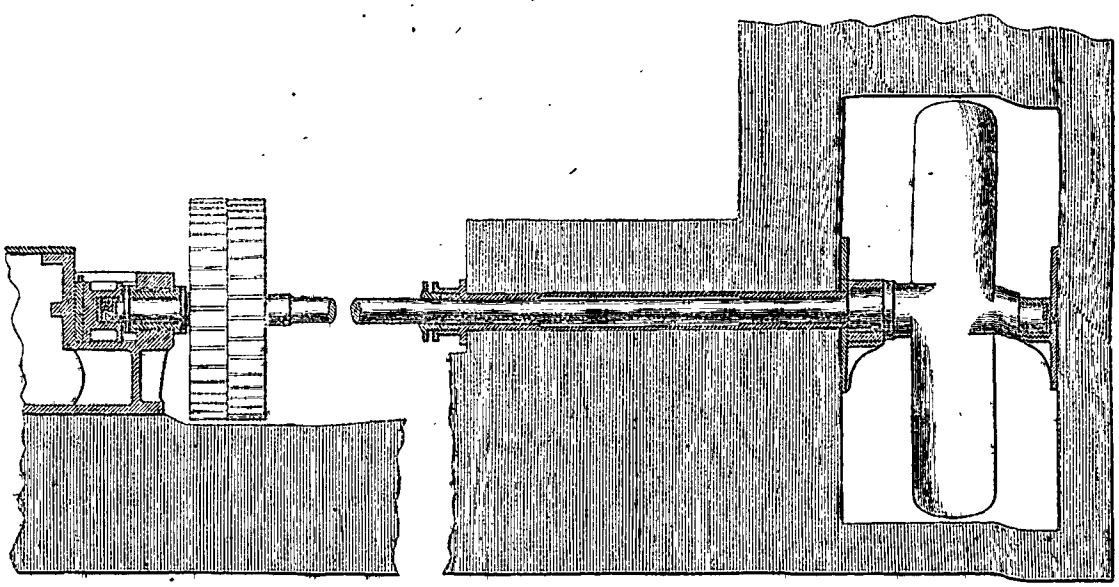

PERPENDICULAR SECTION OF STERN PORTION OF SCREW STEAMER "CORREO."

are perpendicular and horizontal sections of the stern portion of the screw steamer "Correo." A A and B B are the discs for receiving the thrust of the shaft, and the key for forcing forward these discs when required, already represented in *fig.* 192., and the short shaft for carrying the screw is formed of a brass pipe, represented in action in *fig.* 197, into which the square

Fig. 197.

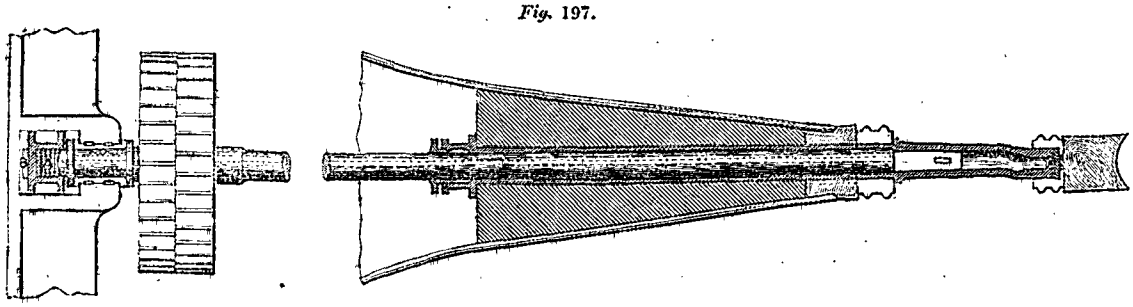

HORIZONTAL SECTION OF STERN PORTION OF SCREW STEAMER "CORREO."

end of the screw shaft enters and is keyed. The stuffing box for excluding the water, and the pipe passing through the stern, are shown very distinctly in these representations. The bearings of the screw beneath the water being formed on the brass pipe which carries the

screw, are, of course, brass. The discs for receiving the thrust at the back end of the screw, are also visible in these figures, as well as the discs for receiving the forward thrust. The shaft, it will be observed, does not bear upon the pipe which serves to conduct it through the vessel, through the whole length of the pipe, but only bears for a certain distance at each end. In the engines of the "Wasp," Plate XIII., it will be seen that the shaft bears upon pipe leading through the stern throughout its entire length; and this I consider to be a preferable practice in all cases in which the screw is made to come up through a trunk, for the wear will be small in the proportion of the extent of bearing surface. But in engines like those of the "Correo," where the screw is not made to lift, the steadiness of the shaft will mainly depend upon the efficiency of the end bearing. That bearing is very generally made too short and too small in diameter; and not only should this bearing be of a very efficient character, but means of tightening and raising it without putting the ship into dock, should be afforded. Messrs. Penn introduce a tube or long bush, such as is shown in *fig.* 198., into the posterior end of the pipe passing through the stern. This bush is lined with soft metal, and a small tooth or projection is left upon its exterior, which fits into a corresponding recess in the interior of the pipe, and prevents the bush from revolving in the pipe, which otherwise it might sometimes do. This bush, when worn, may be removed and another may then be introduced. If, however, it were made conical with a spiral cut, it might be tightened up, as it wears by being forced further into the cone. Whatever be the arrangements adopted for passing the screw shaft through the stern and securing it at the end, it is highly necessary that the most perfect steadiness of the shaft, when in operation, be attained and preserved; as if there be any play an extra strain will be thrown on the stern timbers, and there will be a good deal of shaking at the stern. To diminish this shaking, the hole in the deadwood in which the screw revolves should be of sufficient size not merely to allow the screw itself to pass, but also the coating of water which surrounds it, for if this coating be swept off at each revolution, there will be more shake and also a loss of power. In nearly all screw vessels a certain leakage of water through the stuffing box at the stern is permitted, to lubricate the packing and to keep it cool; and this water should be conducted into the engine compartment by an appropriate pipe instead of being suffered to stagnate or accumulate in the hold. In all wooden vessels the screws should be of brass, the pipe passing through the stern should be of brass, and the shaft until after it emerges from this pipe, should be coated with brass, so as to protect the shaft from the corroding action of the sea water. In all vessels, whether wood or iron, the bearings of the screw shaft immerged in the water should be covered with brass, and the surfaces in fact should be of brass or soft metal, in every case in which there is attrition beneath the water. In vessels in which these conditions have not been observed, the shaft has become so corroded in a few years that it has been necessary to replace it.

Fig. 198.

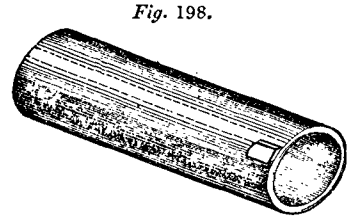

BUSH FOR PIPE AT STERN OF SCREW VESSELS AS MADE BY MESSRS. PENN.

Modes of raising the screw. — It is mainly in war vessels that it is judged advisable to be able to raise the screw out of the water, and the mode in which this is accomplished is as follows: — The screw is fixed, not upon the end of the screw shaft, but upon a separate short shaft which is supported by bearings formed in a frame resembling a window sash which may be raised upwards in guides on the stern and rudder posts; and the end of this short shaft is provided with a square or hexagonal socket, into which a corresponding projecting part of the screw shaft fits, so that when the screw shaft is put into revolution the screw will be turned round. The general nature of the arrangements necessary for carrying into effect this object will be understood by a reference to Plates XIII. and XIV., but the accompanying figures will make the several different classes of expedients for raising the screw more readily intelligible. *Figs.* 199. and 200. represent the arrangements adopted for raising the screw of the "Amphion." An upright key is fitted into a small cog-wheel situated beneath the deck, and this key is turned round by a cross handle resembling the handle of an augur. The revolution of the small wheel causes the revolution of two other small wheels in connexion with it, which last wheels are fixed on the top of two large vertical screws, and these screws being put into revolution raise up the frame which carries the screw. In *fig.* 201. is represented the catch for retaining the screw in the vertical position while it is being raised out of the water.

Figs. 199, 200.

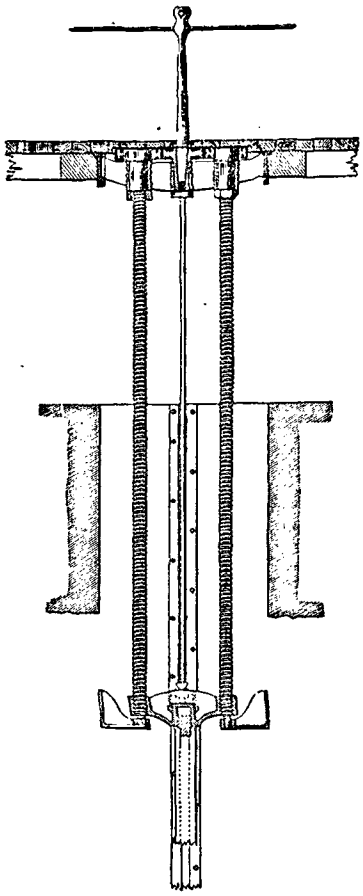

ELEVATION OF APPARATUS FOR LIFTING SCREW OF "AMPHION." SCALE 1-FIFTH INCH TO 1 FOOT.

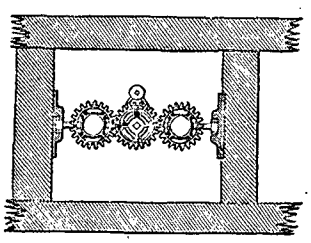

GROUND PLAN OF APPARATUS FOR LIFTING SCREW OF "AMPHION." SCALE 1-FIFTH INCH TO 1 FOOT.

Fig. 202.

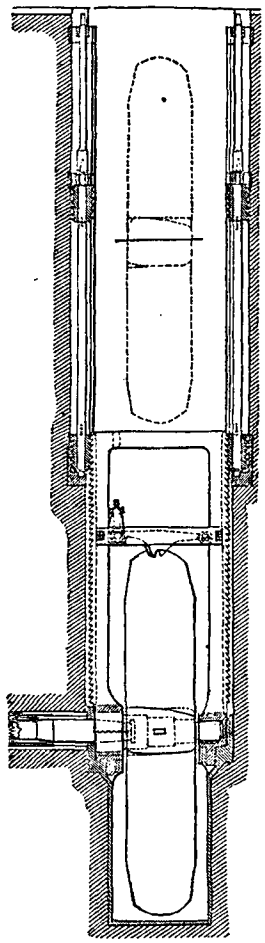

ELEVATION OF APPARATUS FOR LIFTING SCREW OF "AJAX." SCALE 1-EIGHTH INCH TO 1 FOOT.

Fig. 201.

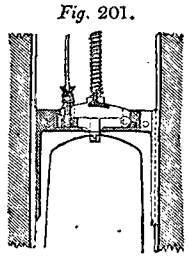

CATCH FOR SCREW OF "AMPHION."

Fig. 202. represents the arrangement for lifting the screw of the "Ajax." Here, instead

of the long screws, pieces of cast screw are introduced at intervals upon two upright spindles, and these portions of screws work in the sides of the sliding frame which is properly toothed to enable them to do so. It will be obvious that before the teeth of the sliding frame leave one pair of short screws they will be engaged with the next pair, and thus the same effect will be produced as if long screws had been employed. The arrangement represented in *fig.* 202. is nearly the same as that employed in the "Wasp," and which is represented in Plate XIII. In the "Wasp" the screws are turned by means of ratchets, like the arrangement of ratchet brace used in engine factories, and a very effectual motive force is thus obtained with but little apparatus for that purpose. One man may work the handle of each ratchet backwards and forwards, and there will be no difficulty in making the two men when thus employed to keep time so as to raise each side of the frame with the same speed.

Figs. 203. and 204. represent the arrangement employed for lifting the screw of the "Dauntless." Here there are two long screws employed as in the "Amphion," but they are turned by an apparatus resembling a winch placed upon the deck. Both the screws and the frame are of brass, and the bearings of the short shaft which carries the screw are cased with brass to obviate corrosion by the sea water. A plate will be observed in these several figures interposed between the stern post and the end of the screw shaft, to receive the strain when the engines are reversed.

Figs. 203 *and* 204.

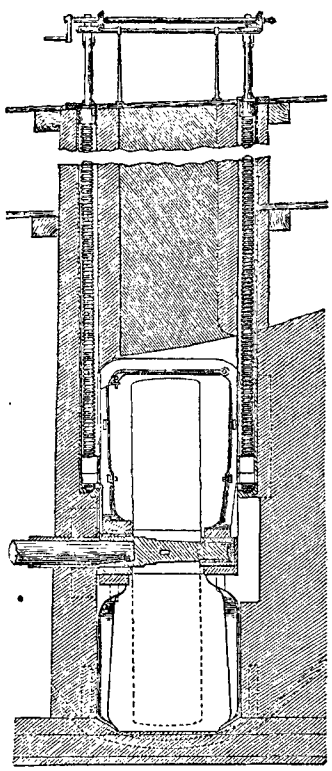

ELEVATION OF APPARATUS FOR LIFTING SCREW OF "DAUNTLESS." SCALE 1-EIGHTH INCH TO 1 FOOT.

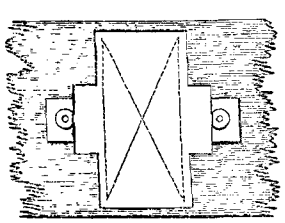

GROUND PLAN OF APPARATUS FOR LIFTING SCREW OF "DAUNTLESS." SCALE 1-EIGHTH INCH TO 1 FOOT.

Fig. 205.

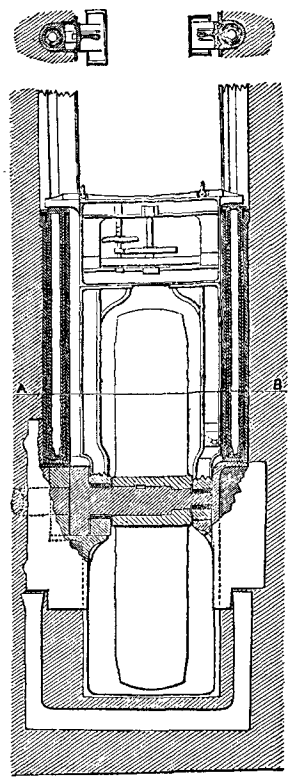

TRANSVERSE SECTION AND ELEVATION OF APPARATUS FOR LIFTING SCREW OF "HOGUE." SCALE 1-EIGHTH INCH TO 1 FOOT.

In *fig.* 205. is represented the arrangement employed by Messrs. Seaward for raising the screw, and it is very different from the rest, as it operates upon the principle of hydraulic pressure. The water from a small pump, which is worked by any convenient means, is conducted beneath two plungers, upon the tops of which the frame rests which carries the screw. These two plungers, however, instead of being made in the usual manner of the plungers of pumps, have two other smaller plungers within them, so that the

combination resembles a spy glass, as one tube may be drawn out of the other in the same manner. Now, it will obviously happen, when the pressure of the water is applied, that the larger tubes will rise first, carrying the smaller tubes within them, and the ascent will continue until the limit of the ascent of the larger plungers is reached, when the smaller plungers will begin to ascend, and they will, in their turn, continue to rise until they come against the stop provided to restrain them from going too far, or until the necessary elevation of the screw is reached. The transverse section is made through the line AB.

Telescope chimnies. — In Plates XIII. and XIV. representations are given of the telescope chimnies of the "Wasp" and "Ajax," and in *fig.* 206. a very complete arrangement for a chimney of this kind is shown, which has been designed by Mr. Taplin. The manner in which chimnies on this construction act is so obvious as scarcely to need any description. The object of the plan is to enable the chimney to be shut up like a spyglass and lowered beneath the deck when the vessel is under sail alone, and the chimney is consequently made in two or more lengths of different diameters, so that like a spyglass they may shut up into one another. At the top of the lowest piece of chimney pulleys are attached, over which pulleys chains are passed, and the ends of these chains are fixed to the bottom of the length of chimney which has to be raised. The other ends of the chains are wound up by any appropriate mechanism, and as they are wound up, the chains must obviously lift up the internal piece of chimney. If there be still another length to be lifted it is raised in like manner, and the chains maintain the several pieces in their proper positions. If the chimney has to be lowered, the chains have only to be unwound, and the several pieces then descend by gravity into that part of the root of the chimney which is beneath the deck. Telescope funnels, it is necessary to remark, have a very powerful action on the compass, and the compass will point in a different direction when the funnel is up, from what it will do when the funnel is down. It is necessary, therefore, to ascertain the error in each condition of the chimney.

Fig. 206.

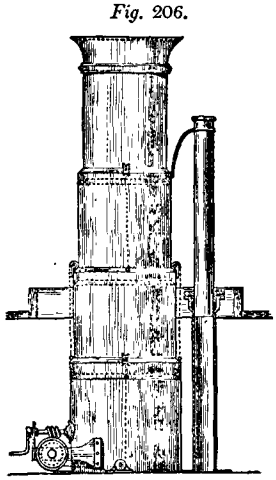

TAPLIN'S TELESCOPE FUNNEL.

Ventilation. — All vessels, whether screw or paddle, stand in need of more effectual means of ventilation, and I consider that the donkey engine of every vessel carrying passengers should be made sufficiently powerful to enable it to drive one or more large and powerful fans, but not at such a rate of speed as to occasion a humming noise. The air should be conducted from these fans into every cabin by means of wooden or sheet iron pipes led beneath the cabin sole, and provision should be made either for warming or cooling this air as may be desired. It is of course necessary to take care that the air sent into the cabins be not drawn from the engine room, as the odour of grease and other engine room perfumes would thus be imparted. In warm climates, and especially in vessels crowded with pas-

sengers, some such means of ventilation are indispensable to health and comfort. In 1847, I had occasion to proceed from this country to India in the vessels of the Peninsular and Oriental Company, and I returned by the same route. The vessel was on each occasion crowded with passengers, and I found the atmosphere of the cabins, especially at night, to be so foul and offensive, that it seemed to be a successful imitation of the Black Hole of Calcutta, and many nights I passed upon the deck. A representation was accordingly made to the Directors by myself and many of the other passengers, and Mr. Jackson, an engineer of ability, who happened to be on board, executed a drawing of a fan for ventilating the cabins, showing how it might be applied with little difficulty and at little expense for the ventilation of the cabins in an effectual manner. Our representations were thankfully accepted, and it was also intimated that the expedients of ventilation we had recommended would be immediately introduced; but up to the present time no expedient whatever for the effectual ventilation of the cabins of these vessels has been applied.

CHAPTER XI.

THE SCREW AND PADDLES COMBINED.

I AM not aware that there are any vessels in actual existence which are propelled by the conjoint action of paddles and a screw, but some years ago I proposed the establishment of vessels of this kind, under circumstances which it will require a slight digression to recite.

The Peninsular Steam Packet Company, of which the Peninsular and Oriental Steam Packet Company is a subsequent extension, was established by my father, the late Captain Bourne, who advanced more than half the capital necessary for the establishment of the Company himself, while the residue was chiefly contributed by his brothers and other members of his family. The "Tagus," "Braganza," and other original vessels of the Company were constructed under my direction, and they were generally considered to be the best vessels of their time; but for many years past I have ceased to have any further connexion with the Company than is implied in an interest in its success, and a desire to see it prosper. For some years past, however, its original reputation has been on the decline: the original vessels had become old and slow, and some of them had been lost, while the new vessels which had been added to the Company's fleet, instead of being better than the old, were in most cases worse, so that the prestige with which the Company started was no longer maintained. The result of this state of things was, that various proposals for establishing a rival company were entertained; and it became obvious to me that if a rival Company were established; one of two consequences would ensue: — either the new company would get the mails to carry, or, if the old company succeeded in retaining them, it would only be after such a keen competition, and on such stringent conditions, that the service would hardly repay any contractor. Under these circumstances I communicated with my father, who was then still living, and with some of the other directors of the Company, pointing out the course which it appeared to me ought to be pursued under the circumstances related, and my recommendations were to the following effect: —

It was quite clear that the very general dissatisfaction which had been expressed at the want of power and speed in the Company's vessels was not unfounded. Here was a line, confessedly the most important of all our lines of postal communication, on which the vessels built ten or twelve years before were still the best, the more recent vessels being, for the most part, exceedingly slow and inefficient when compared with other successful vessels of recent construction. It was quite indispensable, therefore, in order to meet the just expectations of the public, that vessels capable of maintaining a higher rate of speed should

be introduced; and as the introduction of such vessels by some party or other was inevitable, it would not be advisable to postpone the improvement until the attempts of rival parties had been so far organized, that competition could no longer be averted by any expedient of amelioration. All this was very clear, but the question at once arose, What was to be done with the existing vessels? Attempts had been made to accelerate some of them by the application of feathering wheels, but with very inadequate results; and all attempts at petty improvement appeared to me not merely futile, but injudicious, as such attempts involved a considerable expense, and practically left the vessels still unequal to the exigencies of their vocation. Now, seeing that it would be impossible to sell the existing vessels without immense sacrifice, and that it would be equally impossible to retain them unless a radical change in their efficiency could be effected, and seeing, too, that the usual means of acceleration had been tried, at a heavy expense, but without any material benefit, it occurred to me, that upon the whole, the most judicious course would be to introduce into each vessel a separate engine which should drive a screw working in the stern of the vessel in aid of the paddles, and by this arrangement it was obvious that any increase of power and speed might be given to the existing vessels that the exigencies of the case required. I recommended, therefore, that one of the smaller vessels of the Company, the "Madrid," for example, should have a screw fitted at the stern to aid the operation of the engines; and I found that a pair of screw engines, of the same power as the existing paddle engines of 140 horses power, could be supplied for about £800, the screw engines being light and cheap, as they would be without air pumps and condensers, and would be connected immediately with the screw shaft. If the result answered the expectations formed of it, a similar arrangement could, it was obvious, be introduced into the larger vessels without any very great expense, and those vessels would thus be enabled to maintain a rate of speed exceeding anything then existing in ocean steam navigation, and the dilemma in which the Company stood of having to discard their present vessels or lose the mail contract, would be dissolved.

This suggestion has met with the same reception and the same fate as that which I had previously made for the better ventilation of the vessels. At first it was looked upon in the light of a great deliverance, but it has since been suffered to languish and die out; my father's advanced age and subsequent illness and death having prevented him from taking those active steps for its furtherance which otherwise he would have felt called on to pursue. The mechanical part of the question was referred to Mr. Penn, for his opinion, whose views completely coincided with my own, the only difference being, that he stated them with greater clearness and force than I should have been able to do. Other leading engineers to whom the proposed arrangement has since been mentioned, concur in the conclusions at which I had arrived. As every one of ordinary engineering attainments will be able to form a judgment for himself upon this subject, I shall here recount the nature of the intended arrangements, and the extent of the benefit which, according to my estimate, would have been obtained.

I have already mentioned that, if the power of any given vessel be doubled, her speed

will be increased nearly in the proportion of the cube root of 1 to the cube root of 2. A vessel, therefore, which maintains a speed of 10 knots with any given power, will maintain a speed of about $12\frac{1}{2}$ knots with twice the power; and I proposed that the power of all the Company's vessels running on important lines should be doubled wherever the usual speed did not exceed 10 knots an hour. Now this duplicature of the power I proposed to accomplish without touching the existing engines at all, and, as I have already mentioned, I proposed to apply a screw in the stern of the vessel, which was to be driven by separate direct-acting engines of its own. The screw engines would not have had either air pumps or condensers; but the steam from the boilers was to enter the screw engines first, and after having given motion to them, would have passed into the paddle engines, where it would have been condensed in the usual manner. By this arrangement, the steam would have been used twice over, and twice the amount of engine power would have been exerted in the hour, without any increase in the consumption of coal. To enable these arrangements to be carried into effect, it would be necessary to work with a higher pressure of steam than has heretofore been employed in these vessels; and I proposed to use a pressure of about 25 lbs. on the square inch, which was about three times the pressure then employed. To enable this pressure to be used with perfect safety, I proposed that the boilers should be circular, such as Mr. Penn has since put into the "Hydra," which may be worked up to 30 or 40 lbs. on the square inch, if required. It would, of course, be impossible to put any such pressure as I proposed to use upon the existing paddle engines, as it would have broken them down; but the steam was to act, in the first instance, upon the pistons of the screw engines, after having given motion to which, it would pass into the paddle engines, and be there condensed in the usual manner. There is, therefore, only the same quantity of steam to be generated under the new arrangement as under the old, and it would be generated, of course, with the same quantity of coal; but, after having been employed in the cylinders of the screw engine, and been there expanded down to that point of elasticity with which the paddle engines at present work, it was to be conducted into the paddle engines and to work them in the same way as if steam of that elasticity had come direct from the boiler. The proposed arrangement, therefore, is analogous to that of a Woolf's engine; but, as the engines employed to drive the screw would work at a high velocity, they would be smaller than the high-pressure cylinders of a Woolf's engine, in the proportion of their increased speed.

It will be obvious, from the exposition I have given in the foregoing pages of the mode of action of the screw in the water, that a screw acting in aid of paddles would work far more efficiently than if it were employed alone to propel a vessel; for, as the vessel is, at all times, moving through the water from the action of the paddles, the screw will always have a column of water, of a considerable length, to act upon at each revolution, and the slip will be diminished in consequence. And as, by the operation of the paddles, the action of the screw is amended, so will the action of paddles be amended by the action of the screw. For, since the vessel will pass faster through the water when an auxiliary screw is

added, the paddles will gear into a greater length of water in a given time, which, as it will possess more inertia without any more pressure being employed to move it, will be operative, to a corresponding extent, in reducing the slip of the wheel. In fact, both propellers will act constantly under the same favourable circumstances as if the vessel were always sailing with a fair wind, for the screw is virtually a fair wind to the paddles, and the paddles are a fair wind to the screw.

It will further be obvious that, by adding to a paddle vessel screw engines of the same power as the paddle engines, the total power of the vessel will be somewhat more than doubled; for, when the speed is increased from 10 to $12\frac{1}{2}$ knots, the speed of the paddle engines will be increased also, so that they will give out a fourth more power than before; and the increased speed of vessel due to this small increase of the power will, in its turn, somewhat increase the speed and power of the screw engines. But this increase of the power I have not thought it necessary to reckon, seeing that it would only be obtained with an increased consumption of fuel, and that the speed of the vessel will not increase quite so rapidly as the cube root of the augmented power. Now, if the speed of the vessel be increased one fourth, and the consumption of fuel, per hour, only remains the same, it is clear that the vessel will require one fourth less fuel for the accomplishment of a given voyage. Instead, therefore, of the vessels employed upon the Indian line having to carry about 600 tons of coal, they would only require to carry 450 tons for the performance of the same voyage under the proposed arrangement, and the weight thus saved would fully compensate for the extra weight of the screw engines and screw.

From these considerations it appears, beyond doubt, that by the proposed mode of acceleration, about one-fourth more speed would have been obtained with a smaller consumption of fuel, and without any increased weight in the vessel. The only topic remaining for consideration, is whether boilers using such a pressure as 25 or 30 lbs. would be quite safe in steam vessels, seeing that the boilers of steam vessels sometimes get incrusted with salt, when, possibly, the furnaces may get red hot. Now it is quite clear that any boiler which is suffered to get red hot, from whatever cause, will be productive of danger; but such an occurrence is a very rare one; and I consider that the risk of salting may be obviated by an expedient mentioned to me by Mr. Penn, as a suggestion of Mr. Spiller's, and which appears to me to afford a perfect security against that danger. This expedient consists in the application of a feed pump, which is purposely made too large to supply the quantity of water requisite for the generation of the steam, and which is not provided with any means of shutting off the water, or allowing the surplus to escape. It will follow, consequently, that a good deal more water will be sent into the boiler than what can be raised into steam, and the surplus must be blown out by the engineer; or a self-acting float may be applied to the boiler to permit its escape when the level of the water rises above a given point. With this simple provision it will be impossible that the flues of the boiler can ever become incrusted to an inconvenient extent, whether the boiler is leaky or not, and any objection based upon the supposition of such a possibility must of course disappear when the pos-

sibility itself no longer exists. The question, however, is not so much whether boilers with pressure of 25 or 30 lbs. may be made as safe as boilers of a much lower pressure, but whether they may be made as safe as boilers with nearly the same internal pressure, but which are by no means adapted to sustain it. In modern sea-going steam vessels 20 lbs. on the square inch is a very frequent pressure, and in a few instances the pressure is as high as 25 lbs. These boilers, nevertheless, have flat sides, and depend for their strength upon stays, which, after some time, corrode, and may even be eaten through, leaving the boiler in a very unsafe state. The pressure, indeed, is always reduced in these vessels, as the boiler gets into a state of dilapidation; but such an adjustment rests the responsibility of the safety of the boiler upon the engineer, and is a practice likely to lead to accidents. Instead, therefore, of loading the boiler at the first to its maximum strength, and gradually reducing the pressure as it gets into disrepair, it appears to me to be by much the safest course to make the boiler of such a construction, at the outset, as to enable it, without the aid of stays, to withstand a very much higher pressure than is put upon it, and it will then continue to be safe even when old and worn. This accordingly is the course which I proposed to pursue, and it still appears to me to be the most eligible that could be adopted.

Such, then, were my recommendations to the Peninsular and Oriental Company, while there was yet time to avert the injurious consequences which have since ensued. After great vacillation and delay they were eventually neglected. A rival company was formed which competed with them for the conveyance of the mails, and the result is, that instead of 19*s.* 10*d.* per mile, which they formerly obtained for carrying the mails from Calcutta to Suez, they now only get 6*s.* $4\frac{1}{2}$*d.* per mile. At the same time an increased rate of speed has to be maintained, which is, of course, tantamount to a further reduction of the payment. In fact, their position upon the Red Sea line is now this, that they would be better without the mails than with them, as the mere expense of the increased quantity of fuel necessary to realize the increased speed which they have undertaken to maintain, will swallow up the whole of the government subvention. To increase the speed of a vessel from 8 to 10 knots, it is necessary that the engine power should be doubled, and under any other arrangement than what I suggested, the consumption of fuel will be increased in about the same proportion as the increased power. Now taking the average cost of coals on the Red Sea line at 50s. per ton, including labour and waste, and the average consumption per hour at 30 cwt. in the existing vessels, there will be about three tons per hour burned with engines of double the power. The cost of fuel will, therefore, be at the rate of 7*l.* 10*s.* per hour, or 15*s.* per knot, supposing the power to be doubled, as will be necessary to realize a minimum speed of 10 knots. This is between 6*s.* or 7*s.* more than the present cost of fuel per mile, so that the whole sum given by government will, on this line, barely cover the additional outlay for the fuel necessary for the maintenance of the increased speed. But the increased cost of fuel is only a part of the new expenses which must be incurred to realize this increased speed, since it can only be given by new vessels. It is a condition of the new contract that the vessels, before they are accepted for the service, shall be able to accomplish a speed of 12 knots, at the measured mile, when sunk to

the load water line. This appears to me a very proper condition, as it ensures the services of vessels of an efficient character, instead of leaving a constant loophole for inefficiency by casting the blame of delays upon the weather instead of upon the ship. Of the whole of the Peninsular Company's fleet of thirty ships, it is, however, doubtful if there is a single one capable of satisfying this condition. Her then, notwithstanding the large expense incurred for repairs and microscopic ameliorations,—the "Bentinck" alone having cost from 35,000*l.* to 40,000*l.* in this way, and most of the other large vessels similar sums, being, in fact, more than could be got for them if they came to be sold,—there remains the same inability as before to realize the speed necessary for the proper performance of the mail service, and new vessels must after all be built. What then is to be done with the old? Upon lines where a high rate of speed is not required they are incapable of maintaining a competition with screw vessels. Upon lines where a high rate of speed *is* required they are unable to achieve it. If sold, they will bring very little, for no one stands in need of such vessels. If retained, they will be only so much lumber representing a large capital but of little actual worth. Even these, however, are no longer the most momentous topics for consideration. To achieve the higher speed necessary under the new contract for the conveyance of the mails, vessels of greater power must be employed, and while the receipts are diminished and the expenses increased, a dividend must, at the same time, be paid upon a larger capital. The average duration of the Red Sea passage by the Company's vessels, for 12 months ending 1851, was from Calcutta to Suez 28 days, and from Suez to Calcutta 24 days, including days of arrival and departure, and stoppages at Madras, Galle, and Aden. The average time both ways will therefore be about 26 days; and, allowing 4 days for the stoppages at Madras, Galle and Aden, and for the unconsumed portion of the days of arrival and departure, which will be about the proper allowance, we shall have 22 days for the duration of the voyage under steam. The distance from Calcutta to Suez is 4757 knots, which gives an average speed of 9 knots an hour. Now vessels maintaining an average speed of 9 knots will be able to engage to give a contract speed of 8 knots with a tolerably fair assurance of being able to keep their time, though it would be desirable that the difference between the average and contract speeds should be greater than this. The contract speed being, in point of fact, the minimum speed, except where some very unusual circumstances of retardation occur, it is clear that the average speed must, in all cases, considerably exceed it, else the vessel will be perpetually behind her time; and on any line exposed to vicissitudes of wind and sea, the difference of a knot an hour between the mean and contract speeds is the least that can be safely allowed. An average speed of 9 knots therefore will answer to a contract speed of 8 knots; and if the contract speed be increased to 10 knots, then the average speed must be at least 11 knots an hour. If then it be the fact that on the Red Sea line the increase of the contract speed from 8 knots to 10 involves an increased expense for coals which consumes the whole of the government contribution so that the existing vessels could realize the same profits at their present speed without that contribution as vessels of the power necessary for the attainment of the increased speed with that contribution, then it is clear

that screw vessels with auxiliary power will realize larger profits still, and that such vessels if set upon this line will, in point of fact, be much more profitable without a contribution of 6*s*. 4½*d*. per mile than vessels requiring to maintain an average speed of 11 knots an hour can be with that contribution. Passengers, indeed, will, other things being equal, prefer swift vessels to slow ones; but if screw vessels on the Red Sea were to work in conjunction with the vessels of the Austrian Lloyd's from Alexandria to Trieste, passengers would be able to proceed by this line from Calcutta to England in about the same time as if they proceeded in the vessels of the Peninsular Company from Calcutta to Southampton. What was lost in time on one side of Suez would be gained upon the other side, so that the total duration of the voyage would be much the same in both cases. The expense of the voyage, however, would be much less by the screw vessels, and those vessels moreover would be able to carry cargo, whereas in the vessels of the Peninsular and Oriental Company at present plying between Calcutta and Suez, about 80 or 100 tons of cargo is all that can be conveyed. Heretofore, indeed, it has been supposed that screw vessels could not ply advantageously in the Red Sea, which is a narrow tract of water with the wind blowing down it for 11 months of the year; and with the inability to tack, and with these winds necessarily ahead in one direction, it was concluded that, of this sea at least, paddle vessels would retain the monopoly. In the permanency of any such impediments, however, I never had the least faith; for, although heretofore screw vessels have been unable to proceed head to wind without a most extravagant expenditure of fuel, or, if of small power, have been unable, under such circumstances, to proceed at all, I have always been confident that this defect would be corrected, and in the foregoing pages the means for accomplishing this correction have been pointed out. Henceforward the Red Sea may be navigated by screw vessels with the same facility as the Mediterranean, and such vessels will certainly supersede paddle vessels in all cases in which the paddle vessels are not supported by a government contribution sufficient in amount to cover the increased expense incident to their employment. A contract which engages to give a high rate of speed for a small rate of mileage is an incumbrance rather than a benefit; and whereas heretofore the terms of the contract for the conveyance of the Indian Mails gave the Peninsular and Oriental Company a virtual monopoly of the Eastern Seas, the conditions are now so completely changed that any new party could compete with them on at least equal terms. I cannot come to any other conclusion than that this consequence would have been in a great measure averted if my recommendation for the acceleration of their vessels had been adopted at the time it was given; and, if this be so, any one who has prevented its adoption, without the realization by any other or better means of the benefits it promised, has certainly incurred a grave responsibility, and has disentitled himself to confidence in his future representations. It is vain to contend with physical fact, for, although it may apparently be stifled for the moment, it will at length manifest its existence by the consequences which it entails. Some of the consequences of this fatal error are visible already; others I foresee, but I will leave their revelation to time.

These comments have extended themselves to such a length, that the remarks I have to

offer respecting the comparative advantages which vessels propelled both by the screw and by paddles would offer relatively with those presented by vessels propelled by either the screw or paddles alone, must be dispatched very summarily. It is only in the case of vessels intended to maintain a high rate of speed upon voyages of considerable length, that I would propose to employ both the screw and paddles; but in those cases the combination has very obvious advantages, if the comparison be made with that measure of efficiency which screw and paddle vessels have heretofore respectively attained. Paddle vessels when deeply laden are unable to exert their power with good effect, whereas under those circumstances the screw acts in its best manner. On the other hand, a screw vessel set to encounter a head wind wastes much of the engine power in slip, and the performance would be improved under such circumstances if half the power were withdrawn to work paddles, since not only would the paddles act in such a case with greater efficiency, but the advance they would give to the vessel would enable the screw to act with greater efficiency also, as it would be perpetually coming into a fresh body of water, whereby the slip would be reduced. A vessel, therefore, propelled by paddle engines of 500 horses power and by screw engines of 500 horses power, would be more efficient when deep than the same vessel propelled by engines of 1000 horses power driving paddles, and more efficient when set to encounter head winds than the same vessel propelled by engines of 1000 horses power driving a screw. In fact, by the proposed combination a higher average measure of efficiency would be attained, and in so far as the screw engines would be lighter and more compact than paddle engines of the same power, a further benefit to that extent would be obtained also. The paddles moreover would not require to be of such inconvenient dimensions as if the whole power had to be transmitted through them, and yet a very effective hold of the water would be obtained. Should either the paddles or the screw be deranged by any accident and be unable to work, the vessel would still be able to proceed by the remaining instrument of propulsion at a diminished rate of speed. Upon the whole, therefore, I am of opinion that vessels constructed on this plan will be better than if propelled solely by paddles, and they will be better also than vessels propelled solely by the screw, if the mode of applying the screw be the same as that which has been heretofore in use, but they will not be better than vessels propelled solely by the screw if the screw be applied in the manner I have recommended, so as to enable screw vessels to proceed, in an efficient manner, against a head wind. It is mainly, however, as a means of accelerating the speed of existing paddle vessels that the plan is to be recommended, and I do not know of any mode by which an effectual measure of acceleration can be ensured with so small a disturbance of the existing mechanism and at so small an expense. In reflecting upon the various means of accelerating vessels when I first entered upon the consideration of this subject, other modes, as may be supposed, suggested themselves of accomplishing the same object. One of these modes was the use of feathering wheels, and the reduction of the diameter of the wheels, so that a higher velocity of the engine would be obtained. But this expedient, it was obvious, would only fall into the category of petty ameliorations, since it would be impossible to reduce the diameter of the wheel

very much in vessels of a varying immersion without introducing other evils, and it did not appear advisable, moreover, to increase the speed of the engines very much beyond that at which they then worked, as many of the arrangements were not suited to a high velocity. Another idea was to interpose gearing between the engine and the paddles; but this expedient had much the same objections as the preceding; and if either of these plans could have been carried into effect, it would have been necessary to increase the area of the floats in the proportion of the increase of power, else the slip would have been augmented. In both of these plans, moreover, the consumption of fuel would have risen in the same proportion in which the power was increased, whereas by the application of an auxiliary screw in the manner I contemplated, the increase of the power would not have occasioned any increase in the consumption of fuel, but, on the contrary, the consumption of fuel per mile would have been less than before. In all cases, therefore, in which it is esteemed desirable to increase largely the speed of a paddle vessel, that object will, in my judgment, be best attained by the introduction of an auxiliary screw, worked by direct-acting engines, which receive steam of a considerable pressure from boilers of appropriate construction, and transmit the steam in an expanded state to the paddle engines to be there condensed in the usual manner.

CHAPTER XII.

RECAPITULATION OF DOCTRINES AND CONCLUSIONS.

In this chapter I propose to present a brief résumé of the principal doctrines and deductions set forth in the preceding pages, to the end that even the cursory reader may be enabled to form a tolerably just conception of their general character. The more important topics will thus be brought into relief; and, at the same time, a bird's eye view of the whole subject will be afforded.

Resistance of bodies moving in water. — In the case of very sharp vessels, the resistance appears to increase nearly as the square of the velocity, but in the case of vessels of the ordinary amount of sharpness the resistance increases more rapidly than the square of the velocity. In the "Pelican," when the speed was increased from $6\frac{1}{2}$ to $9\frac{1}{2}$ knots, the resistance increased as the 2·28th power of the velocity, and this increase of the resistance appears to be due to the difference in the level of the water at the bow and stern which the progress of the vessel occasions. In canals there is an enormous increase of the resistance from this cause, and the same result ensues in shallow water; so that vessels intended for the navigation of canals or tracts of shallow water should be very much sharper at the ends than common vessels. The resistance of a vessel varies very much with her size; and, indeed, in steam vessels of good shape, the resistance at ordinary speeds appears to be chiefly caused by the friction of the bottom. The resistance will, therefore, be increased with the extent of moistened surface, but an extension of the moistened surface in the direction of the length will not occasion the same increase in the resistance as its extension in the direction of the breadth, since the water it comes in contact with is already in motion. In all vessels the perimeter or outline of the immersed cross section should be made as nearly a minimum as is compatible with the other conditions which have to be observed; as, other things being equal, the resistance will vary in nearly the same proportion as the length of the immersed perimeter. In vessels of similar form, but of different sizes, the velocity attained with the same proportionate power will vary as the square root of any linear dimension, so that the resistance per square foot of immersed section will vary as any linear dimension, or, in other words, it will vary as the length of the immersed perimeter. To diminish the friction of the water upon the bottom of ships, it appears to me, that it would be advisable to interpose a thin stratum of air between the bottom and the water. Such a stratum of air could easily be forced out through a slit in a pipe laid on each side of the keel, and I consider that an effectual means of lubrication to the bottom would be thus afforded. It would be necessary, I may remark, that an excess of air should be thus forced out, in order that the desired effect might be produced, for not only would the air be compressed by the hydrostatic pres-

sure of the water, but a part of it would be also absorbed by the water. Slow sailing ships might also be accelerated in their speed by forcing out such a stratum of air at the stem and stern, for the air would both open the water more gradually at the bow and fill up the vacant space at the stern, whereby an artificial and elastic bow and stern would be formed.

The resistance per square foot of immersed section of the "Rattler" is about 25 lbs. at a speed of 10 knots. In the "Pelican," a smaller vessel, of which the dimensions are given at page 139, the resistance was estimated by Messrs. Bourgois and Moll at 30 lbs. per square foot of immersed section, at a speed of 9½ knots. In the "Minx" the resistance per square foot of immersed section was found to be 41 lbs. at a speed of 8½ knots; and at about the same speed I estimate the resistance of the "Dwarf" at 45 lbs. per square foot of immersed section. The resistance of the "Faon" and "Fairy" I estimate at from 50 to 60 lbs. per square foot of immersed section, at a speed of from 12 to 13 knots an hour. These great variations of the resistance per square foot of immersed section show that *it* is not the element by which the resistance should be measured; and the perimeter of the immersed section, or, in other words, the length in the cross section of that part of the skin of the vessel exposed to the water, would, it appears to me, be a preferable standard in every respect.

Comparative advantages of paddle and screw vessels.—In smooth water, and with both vessels in their best trim, screw and paddle vessels are of about equal efficiency, or rather the advantage rather lies with the paddle, though the difference is so small as to be of no practical account. In deep immersions, screw vessels, however, have a very decided advantage; but paddle vessels again have a very decided advantage in the case of head winds. Screw vessels, when set to encounter head winds, are most wasteful of power, but I have discovered a means of remedying this defect, which consists in sinking the screw deeper in the water, and placing it further forward in the dead wood; and with these modifications screw vessels will not be so wasteful as paddle vessels when contending with strong head winds. Up to the present time, however, paddle vessels have a decided advantage over screw vessels in all cases in which a strong head wind has to be encountered; and if the comparison be made between the feathering wheel and the screw, instead of between the radial wheel and the screw—which last species of wheel the foregoing comparison supposes to have been employed—the advantage on the side of the paddles, so far as regards efficiency, will be still more decisive. Screw vessels, however, as they will be hereafter constructed, will, in my opinion, be found preferable to paddle vessels under all circumstances; and, if this view be correct, paddle vessels must be abandoned for all purposes of ocean navigation. The whole question turns upon the power of constructing screw vessels which shall be as efficient as paddle vessels, or more efficient, when set to encounter a head wind. And I have no doubt whatever that this end will be attained by the means which I have proposed for that purpose.

Nature and laws of slip.—Slip is of two kinds—positive and negative; but as the latter is only an accidental phenomenon, it is the first alone to which it is necessary here to attend. Positive slip is made up of two parts, of which the one is lateral slip, and the other retrogressive slip. Lateral slip is the lateral penetration of the screw blades; retrogressive slip

is the backward motion of the water, owing to its deficiency of inertia to resist the force which the screw applies. If the column of water upon which the screw acts were frozen, there would still be backward slip, as the inertia of the water would be just the same as before, but there would be no lateral penetration of the screw blades, and, therefore, no lateral slip, except in so far as the column of water was put into revolution. The lateral slip will, in all cases, be reduced by increasing the length of the screw, but the friction of the screw will be increased in the same, or in a greater proportion. The retrogressive slip can only be reduced by increasing the quantity of water acted upon, and this may be accomplished by increasing the diameter of the screw or the speed of the vessel. It may be still better effected, however, by increasing the immersion of the screw, as more water will then be acted upon without increasing the friction of the screw. The mode of distinguishing the lateral from the retrogressive slip is explained at page 172. In any given vessel the per centage of slip is about the same at all speeds; for though at high speeds the thrust of the screw is greater, yet the quantity of water with which the screw comes into contact is greater also. If, however, the thrust of the screw be increased without an increase of the speed of the vessel, there will be a large increase in the slip. The slip will also be increased by reducing the length of the screw and by increasing its pitch. If the pitch be increased in geometrical progression, the slip will increase in arithmetical progression, and this result will equally follow, whatever length of screw is employed. Screws with many blades have somewhat less slip than screws with few blades; but they have also more friction, and, to give satisfactory results, the pitch should be larger in the proportion of the number of blades, and a large diameter of screw should also be employed.

Thrust of the screw.—The thrust of the screw will depend conjointly upon the pitch and the force exerted upon the screw shaft to put it into revolution. The limit of the screw's thrust, computed on the supposition that it is not subject to friction, may be easily determined on the principle of virtual velocities, as in the case of a screw working in a solid nut; but as part of the rotative force is intercepted by friction, the actual thrust will never be so great as the theoretical thrust, but will be about one-fourth less. I have generally, in the foregoing pages, imputed this diminution of the power to the operation of friction alone, but, in truth, a part of it is imputable, in the case of most screw vessels, to the existence of lateral slip, as I have explained more fully at page 172; but as the lateral slip may be almost extinguished by increasing the length of the screw, and as the same loss would then be caused by the increased friction as is at present caused by the lateral slip, it is clear that the two elements are, in fact, convertible, and, in the case of screws with many blades, the difference between the theoretical and actual thrust is due almost wholly to friction.

Friction of the screw.—The difference between the theoretical and actual thrust of the screw shaft, as shown by the dynamometer, will fix the amount of deduction which must be made for friction and lateral slip. The total amount of slip, whether lateral or retrogressive, is given by the difference between the advance of the screw and the advance of the vessel; and if we find the velocity which the thrust exerted upon the screw-shaft acting

during the time of one revolution would give to a column of water of the same diameter as the screw, and the same length as the pitch, then, by subtracting this quantity from the total slip, we shall obtain the amount of lateral slip. Since, then, we know the total amount of power consumed in friction and lateral slip, and since also we have determined the amount of lateral slip, it will be easy to determine approximately the amount of power consumed in lateral slip, and the residue will be the friction of the screw. The amount of power consumed in friction and lateral slip will vary from between a third and a fourth to between a fourth and a fifth of the whole power developed by the engines, but this includes the friction of the engines as well as the friction of the screw.

Centrifugal Action of the Screw. — The friction of the screw and the lateral pressure of the screw blades put the column of water, upon which the screw acts, into revolution, and a centrifugal action is thus produced which finally expends itself by raising the level of the water at the stern. Heretofore, in screw vessels, when towing or set to encounter head winds, a most wasteful expenditure of power has been produced from this cause; but I propose to render the power thus fruitlessly dissipated available for the propulsion of the vessel, by placing the screw far forward in the deadwood, or rather by using two screws set far forward in the run, which, whenever the vessel was impeded and their centrifugal action was thus brought into play, would cause the upward current, by pressing against the inclined plane of the vessel's run, to force the vessel forward, in the same way as a ship is forced forward by the pressure of the wind upon an oblique sail. By this arrangement the forward pressure upon the vessel would always be proportional to the resistance encountered, and therein screw vessels would have an advantage over paddle vessels, the forward pressure of which is a determinate quantity which cannot be increased. Screw vessels, under this arrangement, would be able to contend with head winds which paddle vessels could not face, and the innovation will be particularly valuable in screw vessels with auxiliary power, which heretofore have been totally incapable of contending with a head wind.

Measure of efficiency in screw vessels. — The measure of efficiency in screw vessels is the dynamometer power, or rather the nearness of its approach to the indicator power. This, however, it is clear, is only a measure of the efficiency of the engines and screw, but not of the hull; for, of two vessels with the same indicator and dynamometer power, one may carry more than the other, or attain a higher speed. The dynamometer power is the thrust upon the shaft in lbs., multiplied by the feet per minute, passed through by the vessel, and divided by 33,000. The proper measure of the efficiency of a vessel is the number of tons which each actual horse power of the engines will transport through 10 knots in one hour, and the larger the vessel is, the higher will be the performance in this respect.

Comparative efficiency of different kinds of screws. — The comparative efficiencies of different screws will depend a good deal upon the qualities of the vessel to which they are attached, and also upon the dimensions of the screws themselves. If, from the fullness of

the vessel or the small diameter of the screw, there is much slip, then a screw with a pitch increasing both in the direction of its length and in the direction of its radius, and with the arms slightly bent backwards towards the stern-post, will give the best results. But if the screw be so proportioned to the vessel that there is little slip, then a screw with a uniform pitch will give as good results as any other kind. Screws of two blades, four blades, and six blades appear to be about equally efficient; but the greater the number the blades, the greater should be the pitch.

Best proportions of screw.—Screws of two blades are usually made as large in diameter as possible, and the pitch is made about equal to the diameter, or a little more, and the length about one-sixth of the pitch. As the size of the screw, relatively with the midship section, is increased, or as the resistance of the vessel is diminished, so may the pitch be increased, and the length of screw diminished. The best proportions for screws of two, four, and six blades, if constructed on the ordinary principle, is given at page 161. The ordinary principle, however, stands greatly in need of emendation, and, in constructing a screw vessel, these are not the elements I should employ, though they will enable results to be arrived at at least fully equal to any which have heretofore been obtained.

Mode of predicating the speed of a screw vessel. — The speed of a screw vessel with a screw proportioned in the usual manner, or as explained at page 161, will be about the same as the speed of a paddle vessel of the same power, form, and size; and the mode of determining the power necessary to produce a given speed in a vessel, or the speed which will be derived from a given power, is explained at page 101. Having ascertained what vessel in the table given at page iii., in the Appendix, the proposed vessel most nearly resembles in size and form, take the corresponding co-efficient given in the third last column of the table as the co-efficient of the intended vessel. Multiply the number of actual horses, power by this co-efficient, and divide the product by the number of square feet of area in the immersed section of the vessel. Extract the cube root of the quotient, which will be the speed of the intended vessel, in knots, per hour.

Influence of the form of hull. — The form of the hull is perhaps the most important question connected with the efficiency of screw vessels, and the most material condition to be observed is to make them fine in the stern. Both ends, however, should be made very sharp, and the vessel should be made very long, and should be broad at the water line, and with some flam of the side, in order to enable her to bear the action of the sails without being careened too much. The portion of the vessel immersed in the water should be made without flat surfaces in it, and the bottom should not be flat, but should rather approach in the cross section to a compromise between a semicircle and a triangle, the semicircle being the form which has least friction and the triangle being the form which has most stability. To illustrate the importance of a proper sharpness being given to the stern, the following facts may be here recapitulated:—In 1846 the "Dwarf," a vessel with a fine run, was filled out in the stern by the application of three successive layers of planking, so as to alter the shape to that of a vessel with a full run. Prior to the alteration the speed of the vessel

was 9·1 knots per hour, the engines making 32 revolutions per minute. The effect of te filling was to reduce the speed to 3·25 knots per hour, with a speed of the engine of 24 revolutions per minute. One layer of filling was then taken off and the speed rose to 5·75 knots per hour, the engines making 26·5 revolutions per minute. When the whole of the filling was removed the speed rose to 9 knots as before. Care was taken in this experiment to bring the filling into conformity with the lines of the vessels, so that there should be no roughness or abruptness to aggravate the evils of a full run, yet the result was a declension to one-third of the original speed. Again the "Sharpshooter" and "Rifleman" were sister vessels of 486 tons and 200 horses' power, but the "Rifleman" was made with a full run and the "Sharpshooter" with a fine run. The speed of the "Rifleman" was found on trial to be 7·9 knots, and of the "Sharpshooter" 9·9 knots. The "Minx" and "Teazer" were sister vessels of about 300 tons and 100 horses' power, but the "Teazer" was made with a full run, and the "Minx" with a fine run. The speed of the "Teazer" was found to be 6·3 knots, and the speed of the "Minx" 7·8 knots. The sterns of both the "Rifleman" and "Teazer" were sharpened subsequently to these trials, and the 100 horse engines of the "Teazer" were, at the same time, put into the "Rifleman," while new engines of 40 horses' power were put into the "Teazer." Both vessels went faster than before. The "Rifleman" when sharpened at the stern attained a speed of 8 knots with engines of 100 horses' power, whereas she had before only attained a speed of 7·8 knots with engines of 200 horses' power. The "Teazer" when sharpened at the stern attained a speed of 7·685 knots with engines of 40 horses' power, whereas she had before only attained a speed of 6·3 knots with engines of 100 horses' power. The engines of the "Teazer" when transferred to the "Rifleman" drove that vessel nearly 2 knots an hour faster than they had previously driven the smaller vessel, an amelioration chiefly consequent upon the sharpened form of the stern.

Influence of the size of hull. — Next to the form, the size of hull is one of the most important questions that can engage attention, as it has a most important influence upon the efficiency. The capacity of a vessel enlarged symmetrically increases as the cube of any increased dimension, the sectional area increases as the square, and the resistance only as the dimension. A vessel therefore of double the length, breadth, and depth will have eight times the capacity, four times the immersed section, and only twice the resistance. In the "Minx" the resistance per square foot of immersed section I estimate at about 71½ lbs., at a speed of 10 knots an hour; whereas in the "Rattler," a larger vessel, the resistance per square foot is only 25, at a speed of 10 knots an hour. Large vessels of good form will be able to carry merchandize more cheaply than small vessels, and they will also be able to realize a higher speed. To realize the same speed under steam alone, a vessel of eight times the capacity will only require twice the power, and the sails of the larger vessel will be much more effective, since, in fact, a larger amount of sail power relatively with the resistance will be applied.

Operation of the sails. — The operation of the sails will be better and more effective in vessels of good form and large dimensions, than in vessels of bad form and of small dimen-

sions — that is, any given area of sail will communicate more mechanical power to the ship with any given force of the wind. In order that a vessel may be able to sail very close to the wind, the surface of the sails should be quite flat, and the sails should have holes in them, or be made like a Venetian blind, as the sails of vessels are made in China. A considerable measure of elasticity, moreover, should be given to some part of the rigging intervening between the sail and the hull; and if the yard, instead of being fixed immediately to the mast, were to be fixed with a sliding eye to a short bowsprit, which the yard might run up or out upon, the necessary elasticity would be attained. The sail might return either by gravity or by a spiral spring, like that of a railway buffer, enclosed in the bowsprit, which might be formed of a hollow iron tube fixed to the mast with an eye, on which it would of course require to swivel in the manner the yard now does in common ships.

Steam vessels on canals and in shallow rivers. — The resistance of steam vessels upon canals and in shallow waters of every kind is enormously increased if a considerable rate of speed is sought to be maintained, as will be seen by a reference to page 196; and for the effectual supercession of this difficulty, it is necessary that such waters should be navigated by vessels of a totally different construction from that of common vessels. The expedient I have proposed for that purpose is a train of shallow barges articulated together, so as to constitute a single long and narrow vessel, and the end barges would require to be exceedingly sharp and shallow, so as to displace the water in a very gradual manner. The steam-engine, instead of acting upon the water, would act upon the ground in propelling the vessel, whereby slip would be obviated, and a better result obtained.

Iron and wooden ships. — Iron ships appear to be in all cases the most advantageous, except where the vessels have to continue for six months or upwards in a tropical climate without any opportunity being afforded of being docked; and, for those cases, vessels with iron ribs, and planked with Malabar teak, appear to be the best. Where Malabar teak, however, cannot be got, other woods may be employed. Iron ships may be kept free from fouling for six months by the application of Mallet's partially soluble poisonous paint. A paint of this description is compounded by Mr. Peacock of Southampton.

Mode of constructing the hulls of ships. — All ships, whether of wood or iron, should be built on the proportions of a hollow beam; and the strength, therefore, should be chiefly collected at the bottom and the deck, as these are the parts which must take the strain. The sides need not be so strong as the bottom and the deck, and the deck should be *built* on to the ship in the same manner as the bottom, instead of being made a mere platform which may at any time be nailed down. The decks of iron ships should be of iron, which may be covered with the species of cement employed in China for covering decks, and which answers its purpose in the most efficient manner. In vessels as at present constructed there are too many ribs, which give no longitudinal strength, and are mainly useful in keeping the hull in shape; but this function fewer ribs would perform. A rib to every beam is sufficient, and rib and beam should be made in a continuous piece, which should encircle the vessel like an internal hoop.

Cost of conveyance in paddle steamers of large power, screw steamers with auxiliary power, and sailing ships. — Supposing the vessels to be in each case capable of carrying the same quantity of merchandize, the cost per ton carried will be about three times greater in the paddle steamer than in the screw steamer; and in the sailing ship the cost per ton carried will be about one-third greater than in the screw steamer. Screw steamers, therefore, can carry more cheaply than either paddle steamers or sailing ships; but this result does not arise from any superior efficacy of the screw as a propeller. It is the result of the use of a low proportion of steam power, which, without entailing much direct expence, produces a large benefit, by enabling the wind to act more efficiently upon the sails; and it is the result, also, of the superior form of hull which has been introduced simultaneously with the screw. Latterly a very superior class of sailing vessels has been coming into use, which, even without a screw, realize a high average rate of speed; but I believe it will be found advisable to introduce screws into sailing vessels even of the best class, as they will be thereby enabled to carry more cheaply, and at an increased rate of speed.

DYNAMOMETER DIAGRAMS TAKEN IN THE RATTLER IN 1845.

To ascertain the Thrust of the Screw Shaft in Tons: multiply the mean pressure in lbs. as exhibited by the diagram by 196 and divide by 2240.

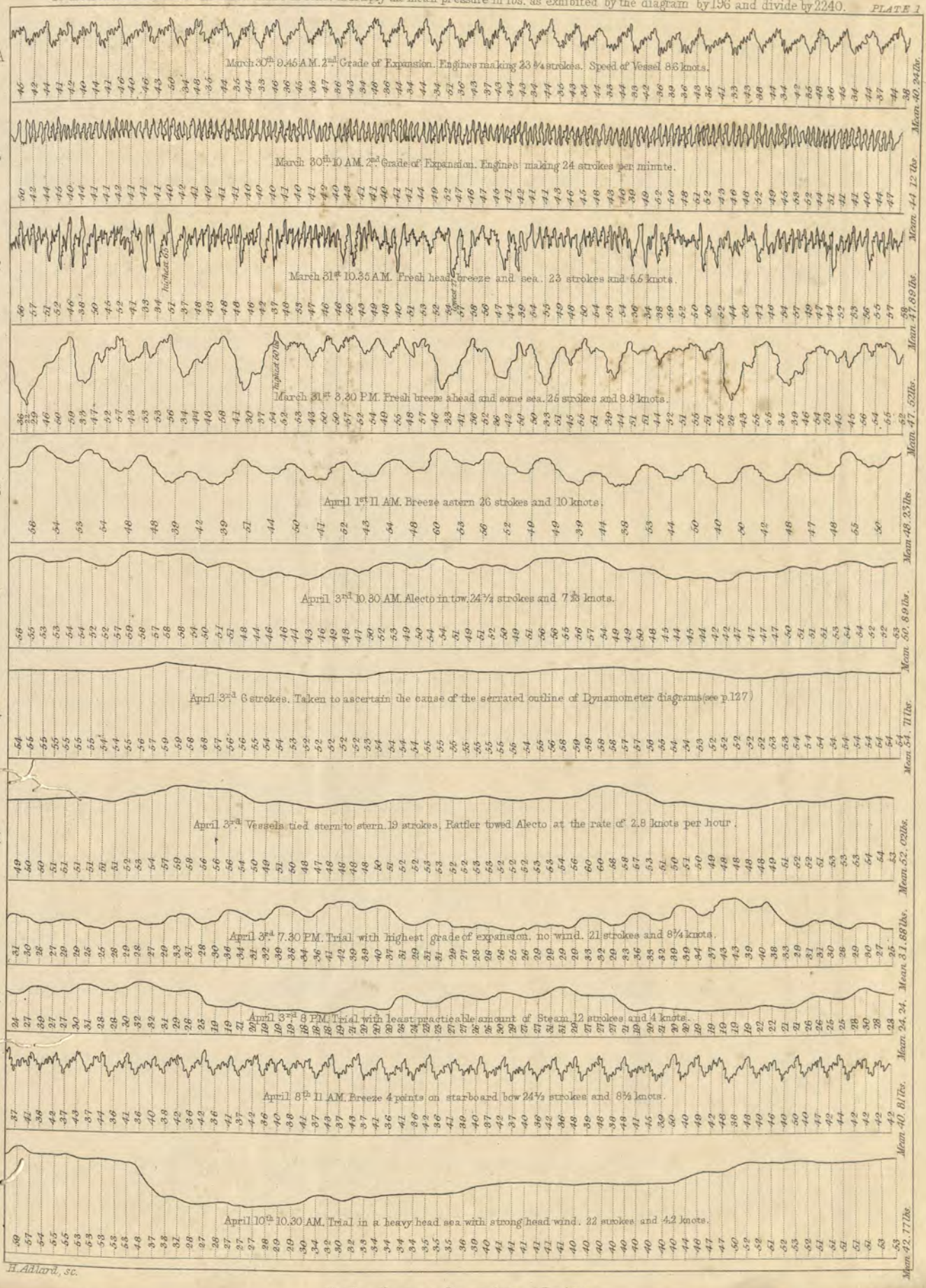
A
March 30th 9.45 A.M. 2nd Grade of Expansion. Engines making 23 3/4 strokes. Speed of Vessel 8.6 knots.
Mean 40. 24 lbs.
B
March 30th 10 AM. 2nd Grade of Expansion. Engines making 24 strokes per minute.
Mean 44. 12 lbs
C
March 31st 10.35 A.M. Fresh head breeze and sea. 23 strokes and 6.6 knots.
highest 62
lowest 22
Mean 47. 88 lbs
D
March 31st 3.30 P.M. Fresh breeze ahead and some sea. 25 strokes and 8.8 knots.
highest 20 lbs
Mean 47. 52 lbs.
E
April 1st 11 AM. Breeze astern 26 strokes and 10 knots.
Mean 48. 23 lbs.
F
April 3rd 10.30 AM. Alecto in tow. 24 1/4 strokes and 7 1/8 knots.
Mean 50. 89 lbs.
G
April 3rd 6 strokes. Taken to ascertain the cause of the serrated outline of Dynamometer diagrams (see p. 127)
Mean 54. 71 lbs.
H
April 3rd. Vessels tied stern to stern. 19 strokes. Rattler towed Alecto at the rate of 2.8 knots per hour.
Mean 52. 02 lbs.
I
April 3rd. 7.30 P.M. Trial with highest grade of expansion. no wind. 21 strokes and 8 3/4 knots.
Mean 31. 88 lbs.
K
April 3rd 8 P.M. Trial with least practicable amount of Steam. 12 strokes and 4 knots.
Mean 24. 24.
L
April 8th 11 AM. Breeze 4 points on starboard bow 24 1/2 strokes and 8 1/2 knots.
Mean 40. 81 lbs.
M
April 10th 10.30 AM. Trial in a heavy head sea with strong head wind. 22 strokes and 4.2 knots.
Mean 42. 77 lbs

H. Adlard, sc.

London. Longman, Brown, Green & Longmans.

INDICATOR DIAGRAMS TAKEN DURING THE EXPERIMENTS WITH THE RATTLER AND ALECTO IN 1846.

RATTLER.

March 30th taken at 9.45 a.m. 23¾ strokes; 2nd grade of expansion. Answering to Dynamometer diagram A.

March 31st Nº1 taken at 10.15 a.m. 22 Revolutions and 4⅔ knots. Nº 2 taken at 10.45, 23 strokes and 6 knots. Nº 3 taken at 3.30 p.m. 25 Revolutions and 8.8 knots. Nº 2 answering to Dynamometer diagram C. Nº 3 answering to Dynamometer diagram D.

April 1st taken at 11 a.m. Full Steam 26 strokes and 10 knots.

April 3rd Nº 1 Alecto in tow. Steam 5lbs. 24½ strokes and 7 ⅛ knots. Nº 2 tied Stern to Stern 19 strokes and 2 ⅛ knots.

April 3rd taken at 7.30 p.m. with lowest grade of expansion 21 strokes and 8¾ knots. Answering to Dynamometer diagram E.

April 3rd taken at 8 p.m. with least practicable Steam 12 strokes and 4 knots. Dynamometer diagram K.

April 8th Nº 1 taken at 2 p.m. Steam low and 2nd grade of expansion 23½ strokes. Nº 2 taken at 4 p.m. 25 strokes.

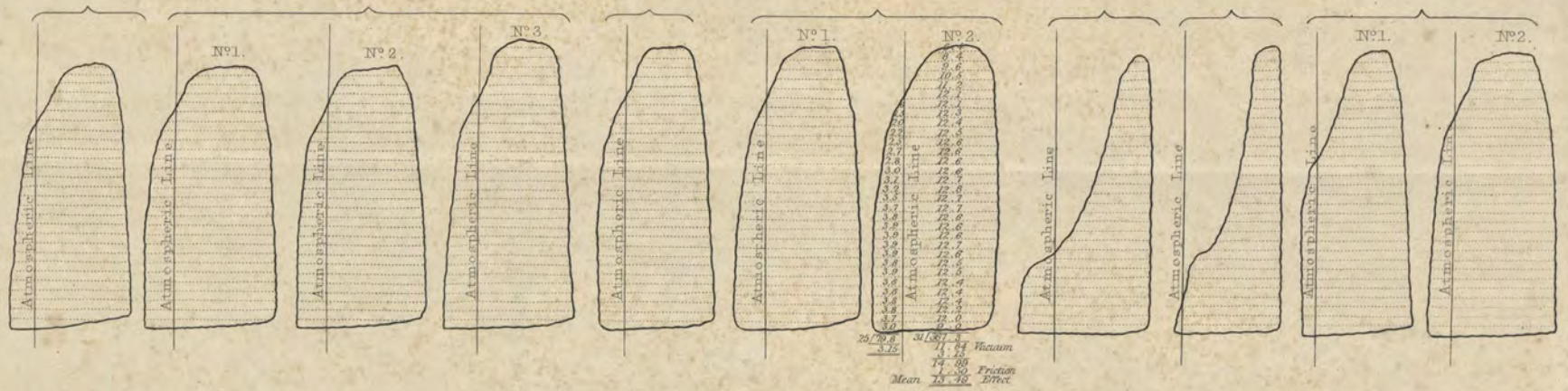

ALECTO.

March 30th Nos 1 & 2, Steam 3¾ lbs. and 19¾ strokes. Nº 3 taken at 9.40 a.m. Steam 3¼ lbs. and 20 strokes.

March 31st Steam 4lbs. and Engines making 18 strokes per minute.

April 1st Engines making 19½ strokes per minute.

April 3rd 5.55 p.m. Steam 4lbs. 8½ strokes Vessels tied Stern to Stern.

April 8th taken at 10.20 a.m. Steam 3 ¾ lbs. and 18 strokes.

THE FIGURES WITH A DOTTED OUTLINE WERE TAKEN FROM THE BOTTOM OF THE CYLINDER: THE OTHERS FROM THE TOP.

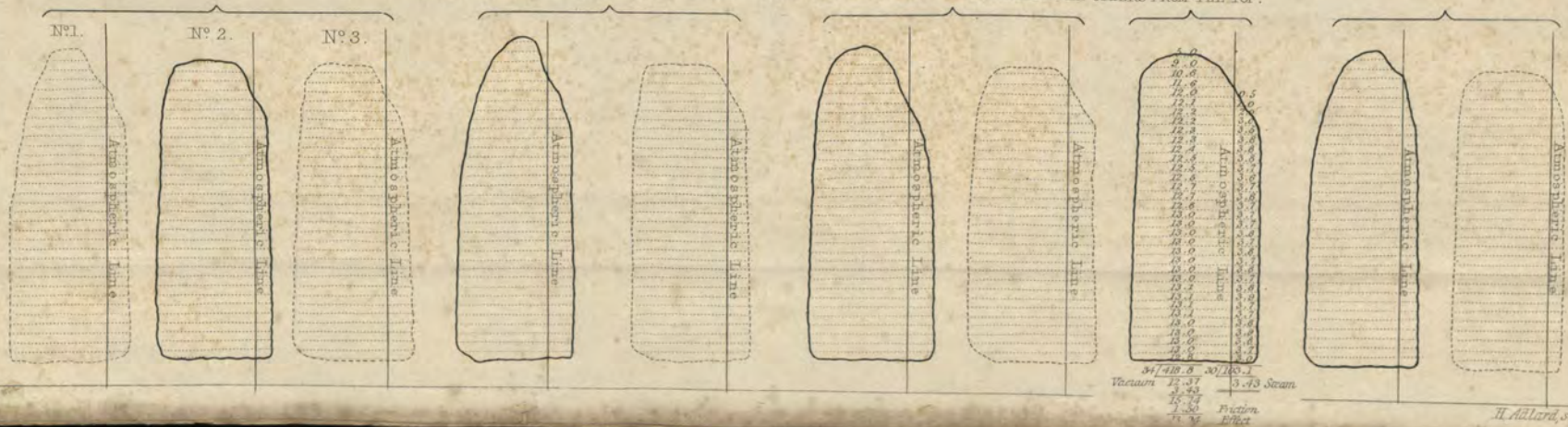

H. Adlard, sc

ENGINES OF H.M. STEAM YACHT "FAIRY" AND OF THE FRENCH MAIL STEAM PACKET "PACHA".

By John Penn & Son, Greenwich.

PLATE I.

GROUND PLAN

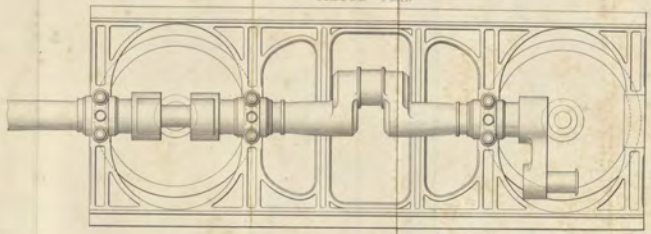

ELEVATION

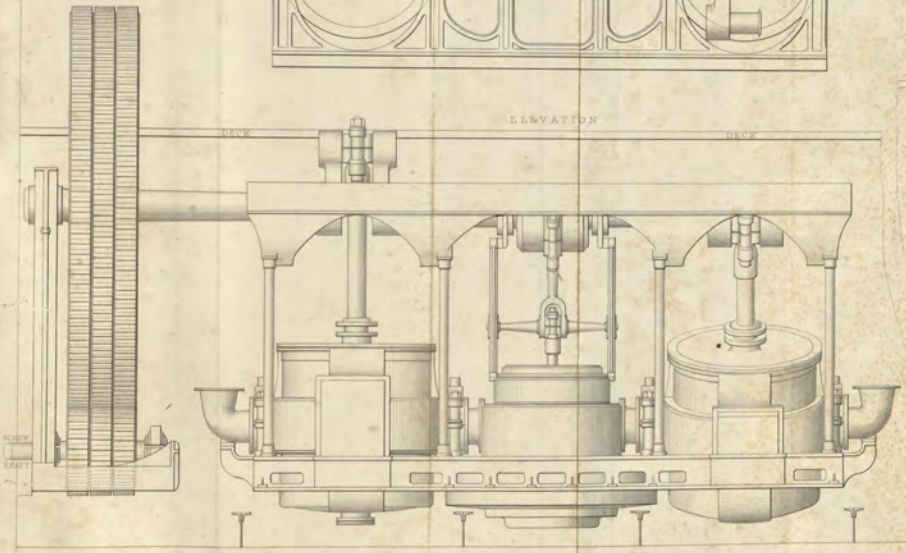

END VIEW

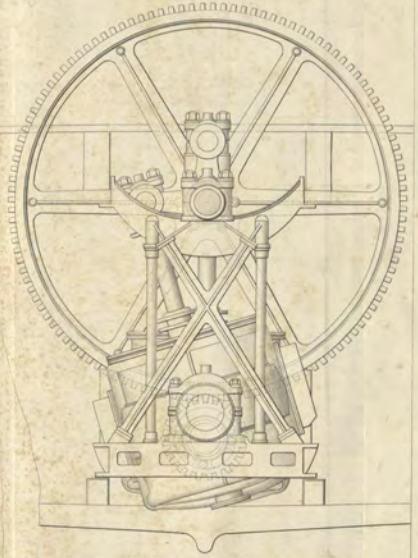

Scale of 0 1 2 3 4 5 6 7 8 9 10 11 12 13 14 15 16 17 18 19 20 Feet

London: Longman, Brown, Green, & Longmans.

END ELEVATION OF ENGINES
OF
H. M. SCREW STEAM SHIP PLUMPER,
OF 60 H.P.

By Messrs. Miller, Ravenhill & Co.

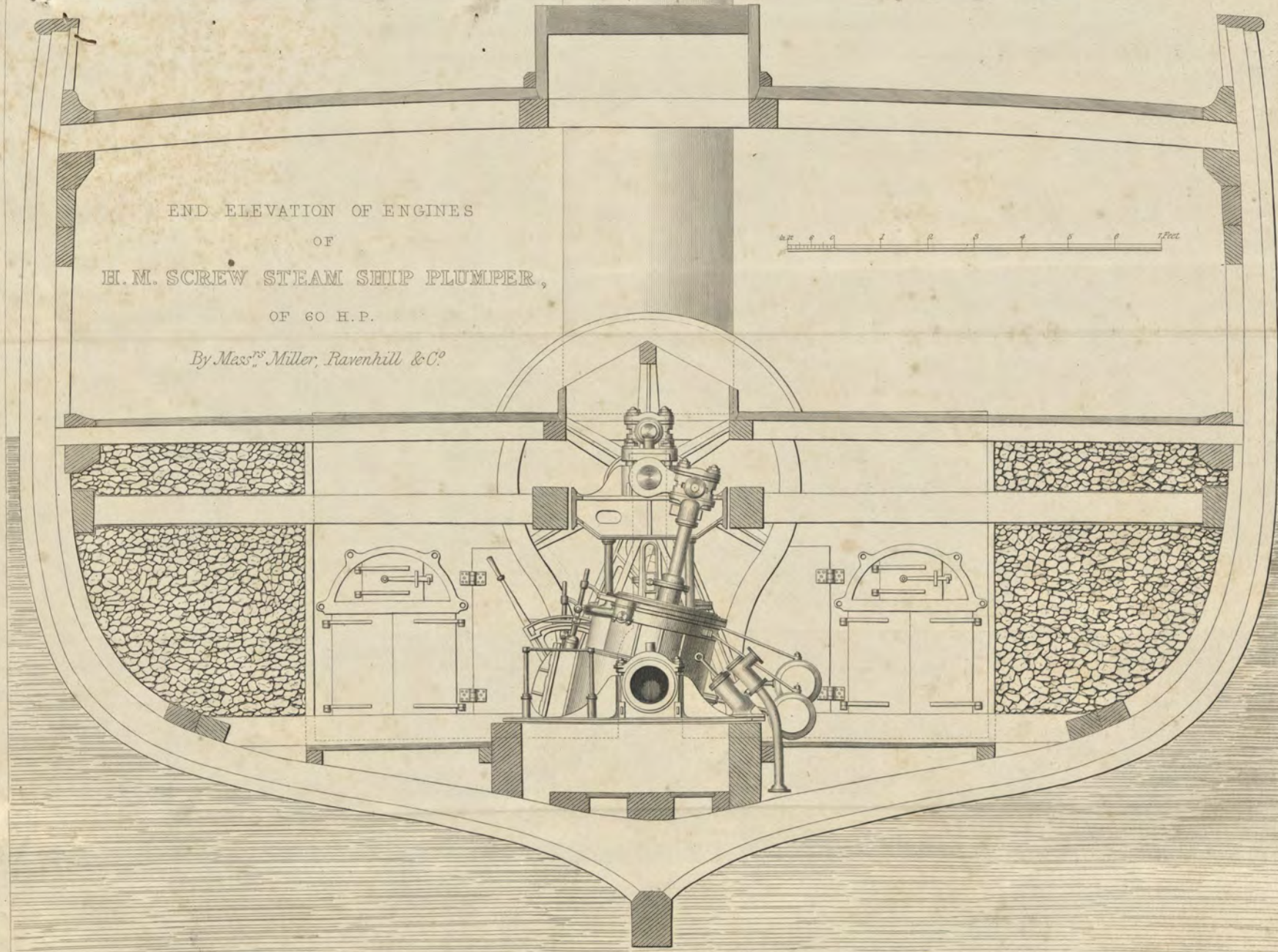

London: Longman, Brown, Green & Longmans.

H. Adlard, sc.

THE OSCILLATING ENGINES AND TUBULAR BOILERS OF THE GREAT BRITAIN STEAM SHIP.

Constructed by Messrs. J. Penn & Son, Engineers, Greenwich.

Scale ⅛ of an inch = 1 Foot.

PRINCIPAL DIMENSIONS

Length of Keel	289 Feet.	Diameter of Cylinder	105 Inches	Diameter of Screw	15 ft 6 Inches
Breadth of Beam	51 Ft.	Length of Stroke	6 Feet	Pitch of Screw	19 Ft.
Depth of Hold	31 ½ ft.	Nominal Power	500 horses	Length of Screw	40 Ft. 8 In.
Gross Burthen	3500 tons	Feet of Heating surface per nominal H.P.	17½ Feet.	Number of Threads	3
Displacement at 10 ft.	2970 tons			Multiple of Gearing	3 to 1

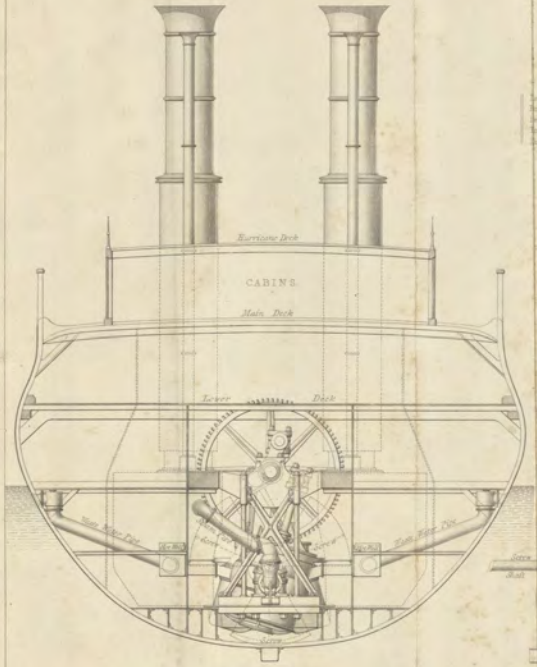

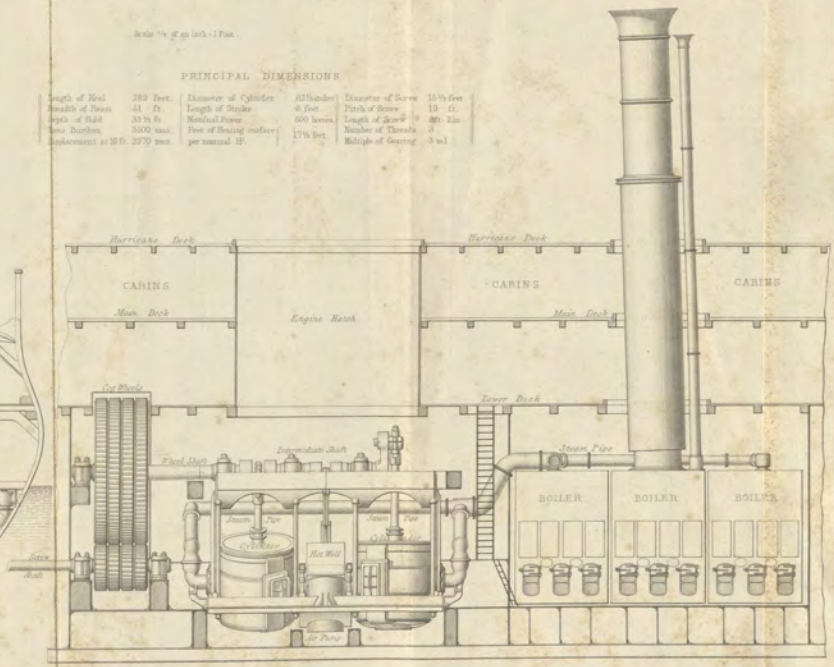

London: Longman, Brown, Green & Longmans

ENGINES OF THE SCREW ROYAL YACHT FIRE QUEEN.

Constructed by R. Napier, Glasgow.

LONGITUDINAL SECTION OF ENGINES AND TRANSVERSE SECTION OF VESSEL

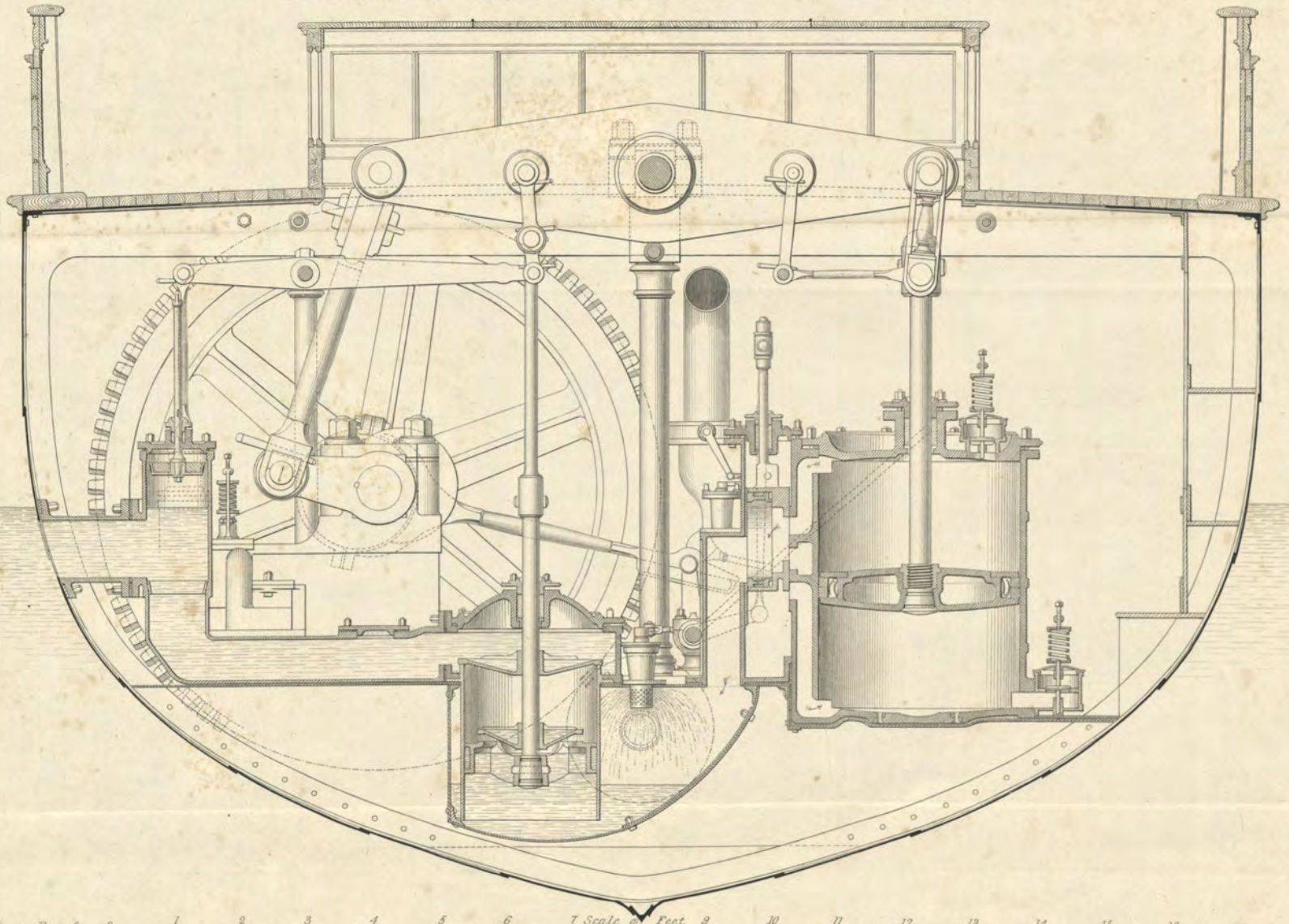

Inches 0 1 2 3 4 5 6 7 Scale of Feet 8 10 11 12 13 14 15 16 17

D. Kirkaldy, del.

London, Longman, Brown, Green & Longmans.

H. Adlard, sc.

ENGINES OF THE SCREW STEAM YACHT FIRE QUEEN.

Constructed by R. Napier, Glasgow.

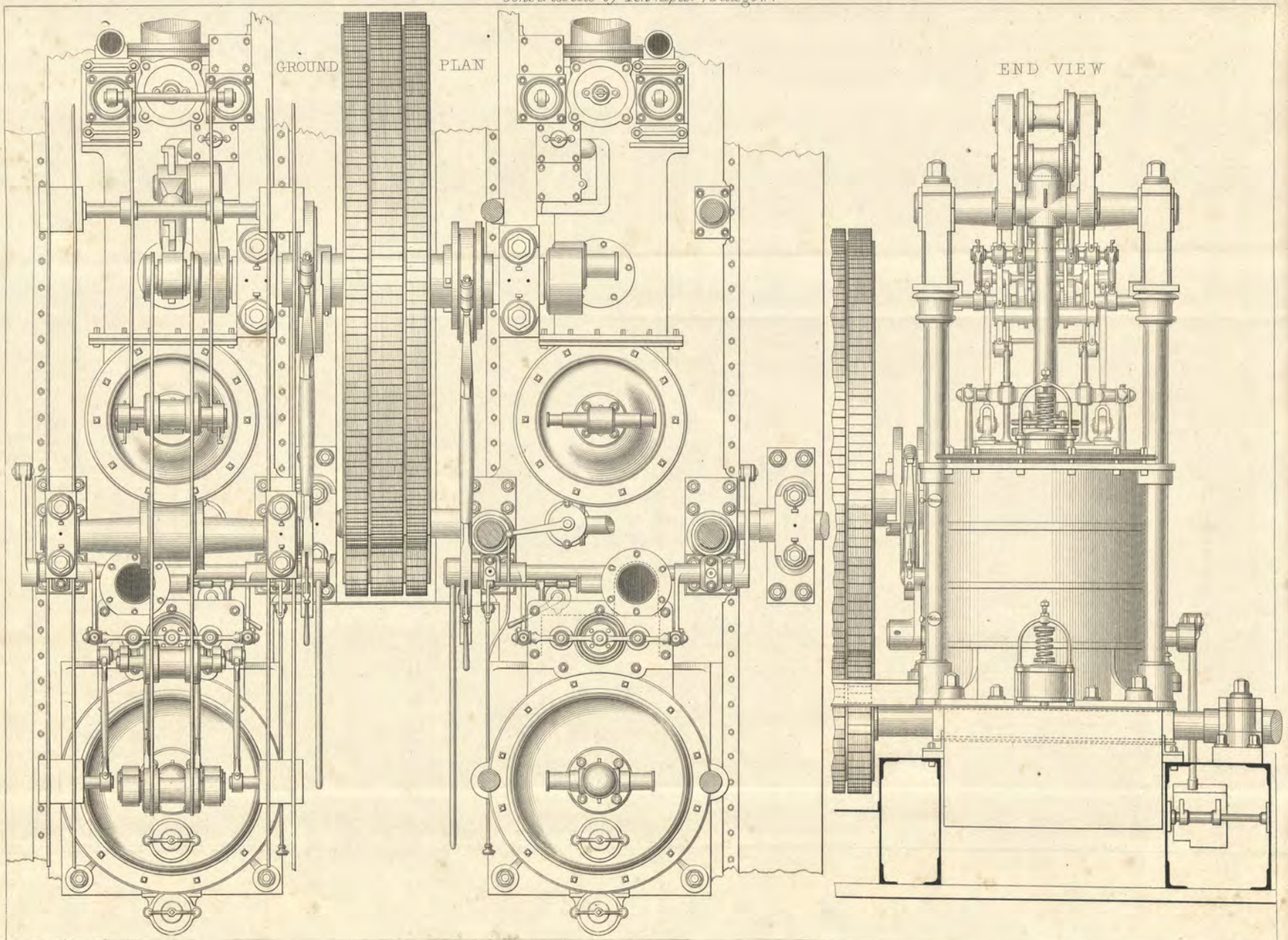

D. Kirkaldy, del.

H. Adlard, sc.

London, Longman, Brown, Green, & Longmans

ENGINES OF THE SCREW STEAM SHIPS CITY OF GLASGOW, CITY OF MANCHESTER, AND GLASGOW.

By Tod & Macgregor

	City of Glasgow	City of Manchester	Glasgow
Diameter of Cylinder	66 inches	71	71
Length of Stroke	6 ft.	5 ft.	5 ft.
Nominal Power	310	380	380
Diameter of Screw	15 ½ ft.	14	14
Pitch of D°	18	18	18
Length of Screw (fore & aft)	26 in.	28	28
Number of Arms of Screw	3	3	3
Multiple of Gearing	2 to 1	2 d to 1	2 d to 1

FRAMING OF CITY OF MANCHESTER AND GLASGOW

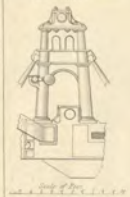

ELEVATION

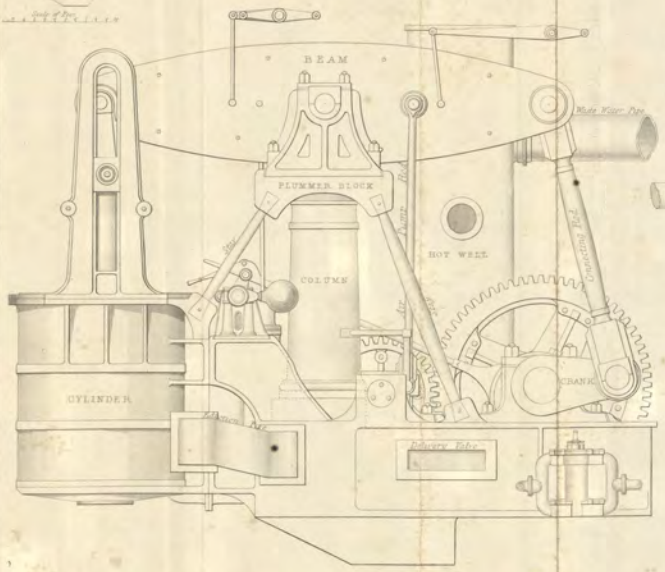

PLAN

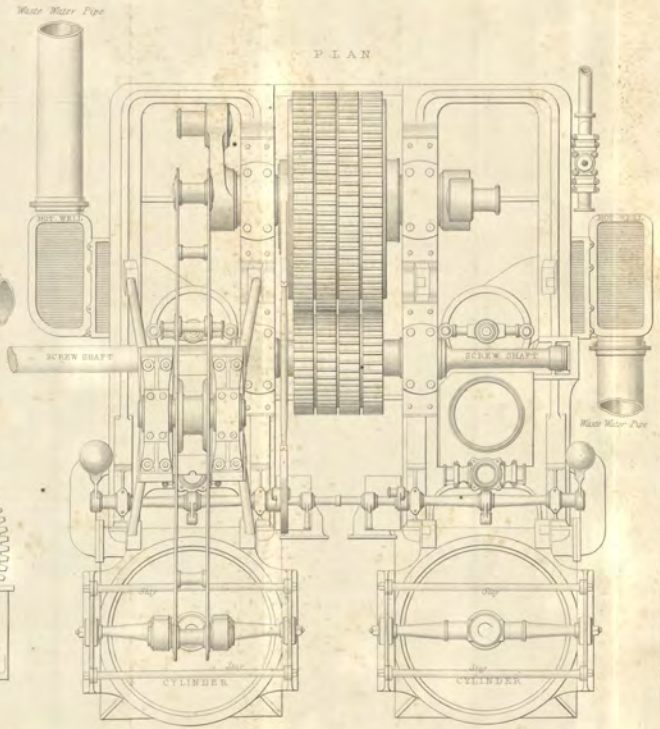

Scale of Feet

H. Adlard, sc.

London, Longman, Brown, Green & Longmans

ENGINES OF THE SCREW STEAM SHIP CORREO.

By Messrs Gourlay, Mudie & Co Dundee.

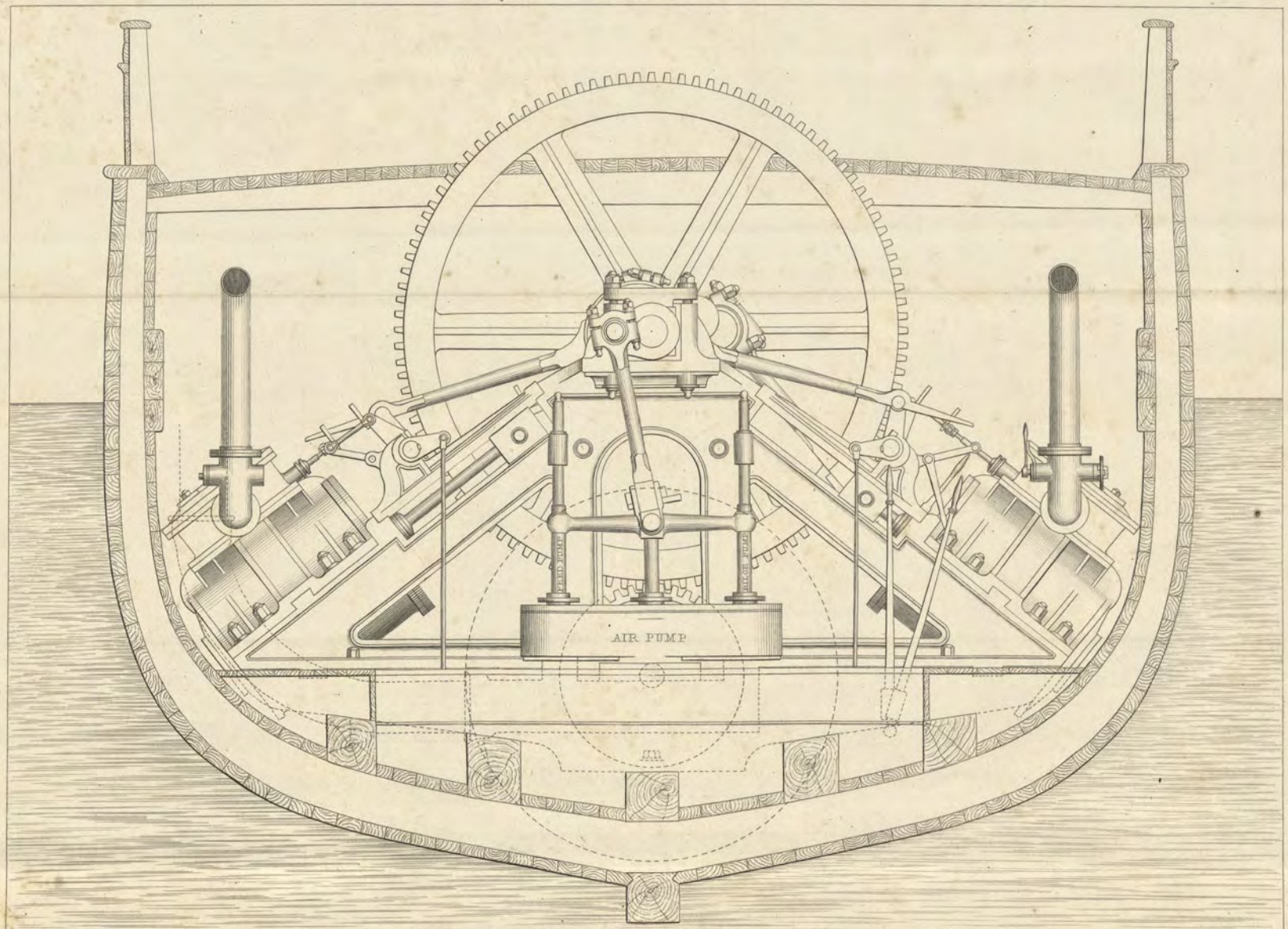

Scale, 3/8 of an inch to the Foot.

H.Adlard, Sc.

London: Longman, Brown, Green & Longmans.

DETAILS OF UNITED STATES WAR STEAMER "PRINCETON."

TRANSVERSE SECTION OF SHIP AND FRONT VIEW OF ENGINES

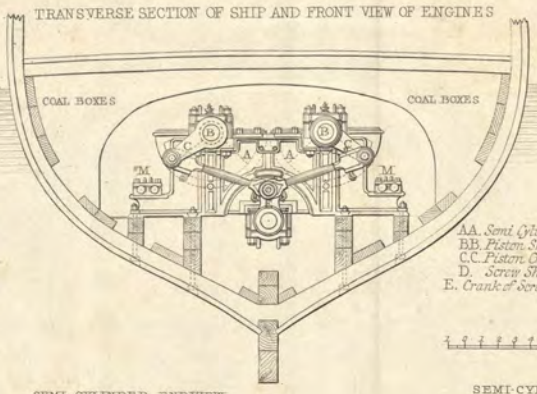

TRANSVERSE SECTION OF SHIP AND BACK VIEW OF ENGINES

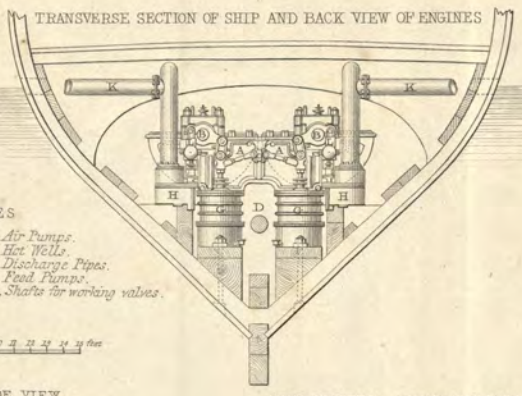

REFERENCES

AA. *Semi Cylinders.*	G.G. *Air Pumps.*
BB. *Piston Shafts.*	H.H. *Hot Wells.*
C.C. *Piston Cranks.*	K.K. *Discharge Pipes.*
D. *Screw Shaft.*	L.L. *Feed Pumps.*
E. *Crank of Screw Shaft.*	MM. *Shafts for working valves.*

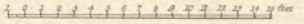

SEMI-CYLINDER, END VIEW

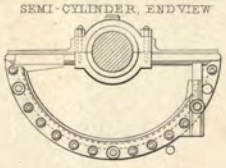

SEMI-CYLINDER, SIDE VIEW

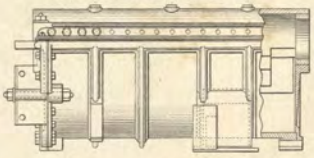

SEMI-CYLINDER, TRANSVERSE SECTION

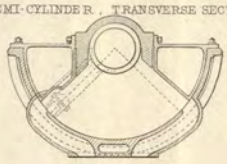

BIRD'S EYE VIEW OF PORTION OF SEMI CYLINDER

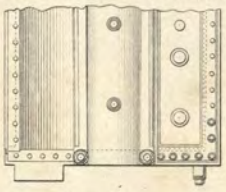

HALF COVER OF SEMI-CYLINDER

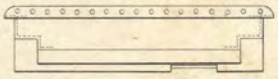

PISTON SHAFT STUFFING BOX

BOTTOM VIEW OF STEAM PASSAGE

TRANSVERSE SECTION OF PISTON

PISTON, SIDE VIEW: ONE HALF IN SECTION

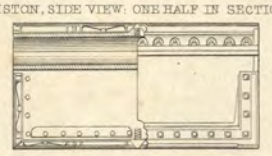

END VIEW OF PISTON

EXPANSION VALVE

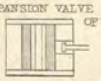

TRANSVERSE SECTION OF VALVE CHAMBERS AND SLIDES

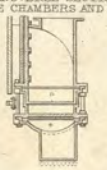

TOP OF VALVE BOXES

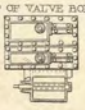

PISTON, TOP VIEW: ONE HALF IN SECTION

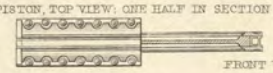

FRONT VIEW OF VALVE CHAMBER

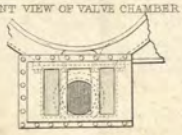

HORIZONTAL SECTION OF SLIDE VALVES

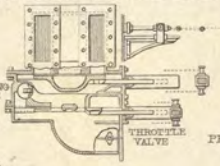

ORIGINAL SCREW OF PRINCETON

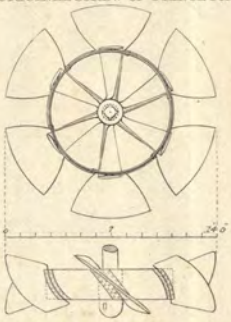

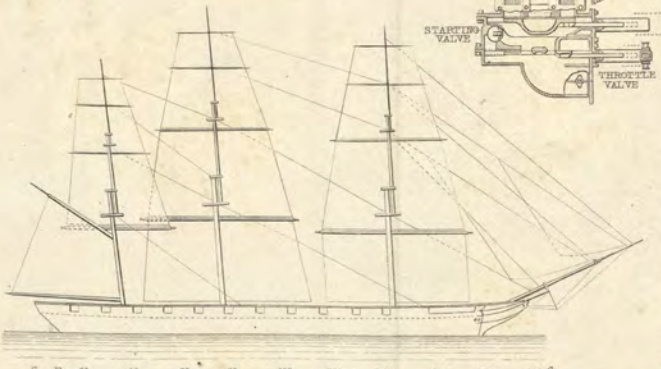

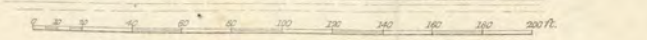

PRESENT SCREW OF PRINCETON

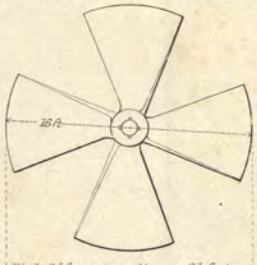

DEVELOPEMENT OF ONE BLADE ON A PLANE SHOWING THICKNESSES OF METAL

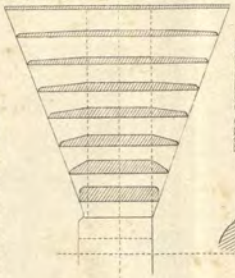

VERTICAL SECTION OF BLADE

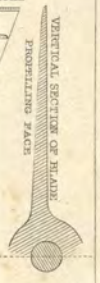

Pitch 25 feet expanding to 31 feet. Composition Metal. Weight 15800 lbs.

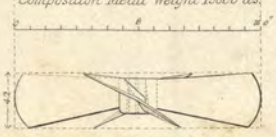

A. *Developement of the directrix or inclined plane of the external edge of one blade.*
B. *Inclined plane of one blade traced on the boss.*

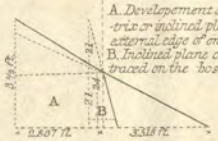

GENERAL DIMENSIONS OF SHIP

Extreme length over taffrail	184 feet.	Displacement at deep load line	1500 tons
Length between perpendiculars	176 "	Tonnage by measurement	900 "
Length on Deck	178½ "	Draft at deep load line aft	21 feet
Beam over all	32½ "	Do. do. forward	18½ "
Depth of Hold	26½ "	Carries 6 medium 32 pounders = 83 cwt. each	
		4 8 inch shell guns = 55 cwt. each.	

W. H. Shock, Engineer. U. S. Navy, del.

H. Adlard, sc.

London: Longman, Brown, Green & Longmans.

THE FRENCH SCREW STEAM FRIGATE POMONE OF 46 GUNS.

VERTICAL SECTION.

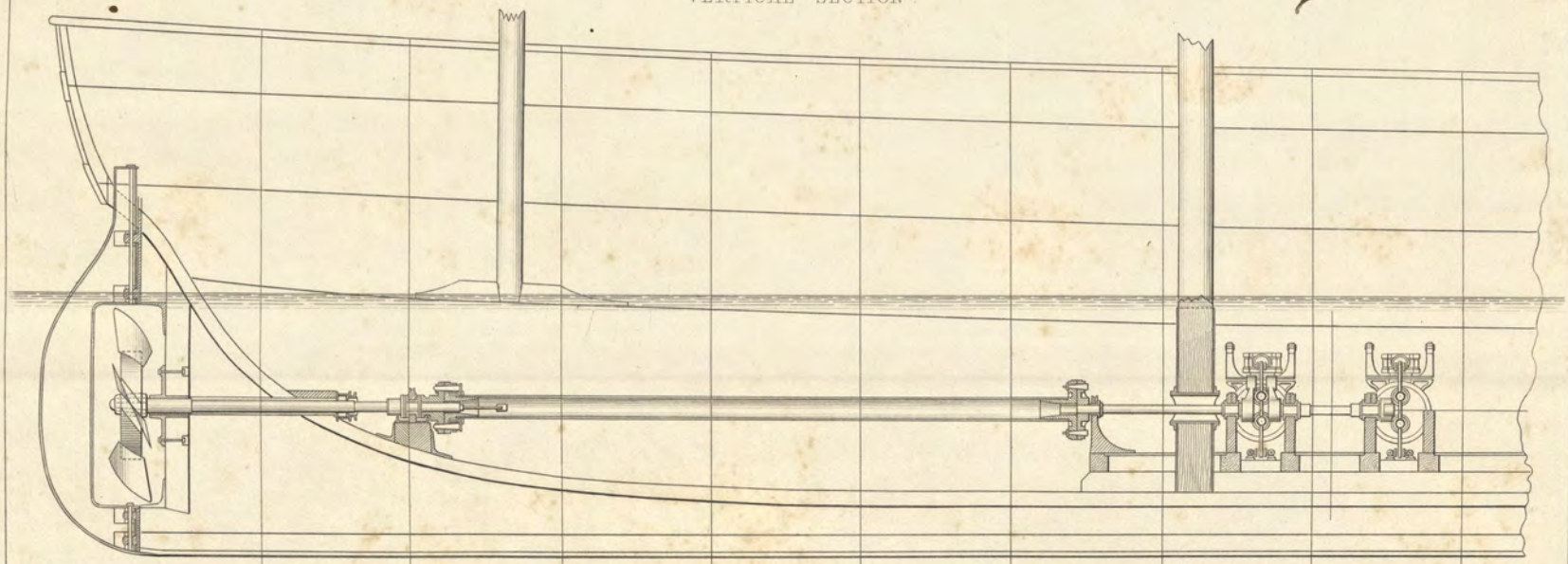

HORIZONTAL SECTION.

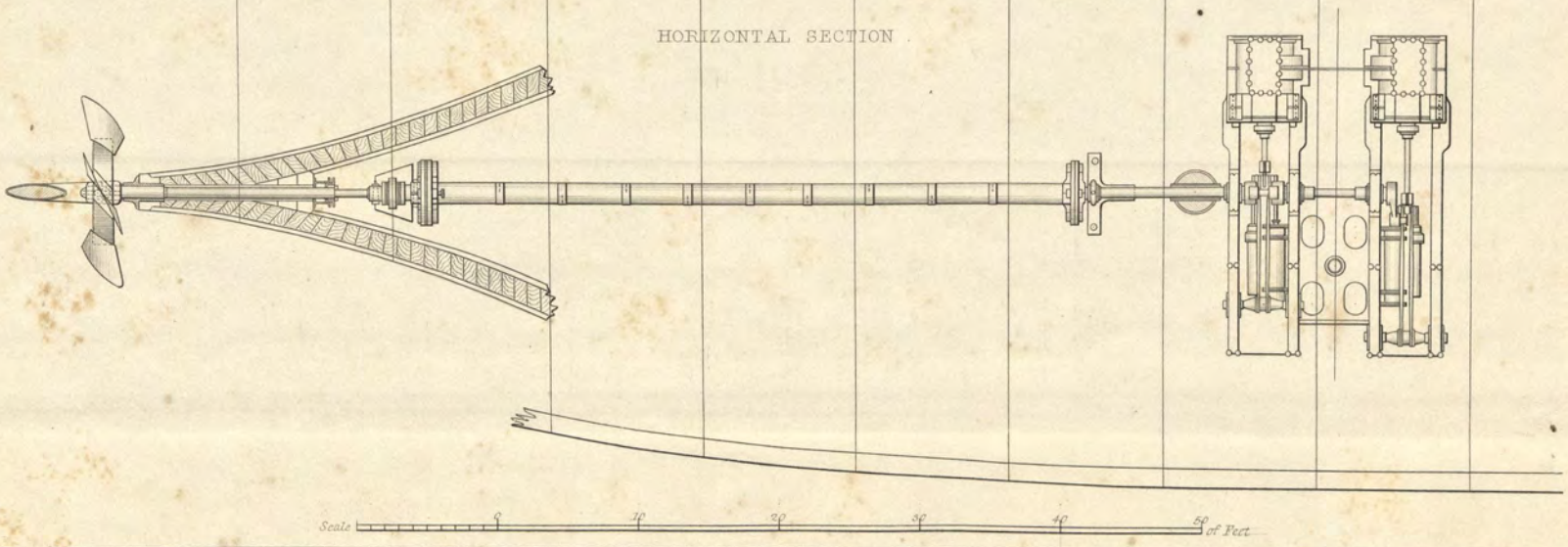

H. Adlard sc

London. Longman, Brown, Green, & Longmans.

ENGINES OF H.M. SCREW STEAM SHIP AMPHION.

Constructed from the Designs of Mr. Holm by Messrs. Miller, Ravenhill & Co.

SECTION AND ELEVATION.

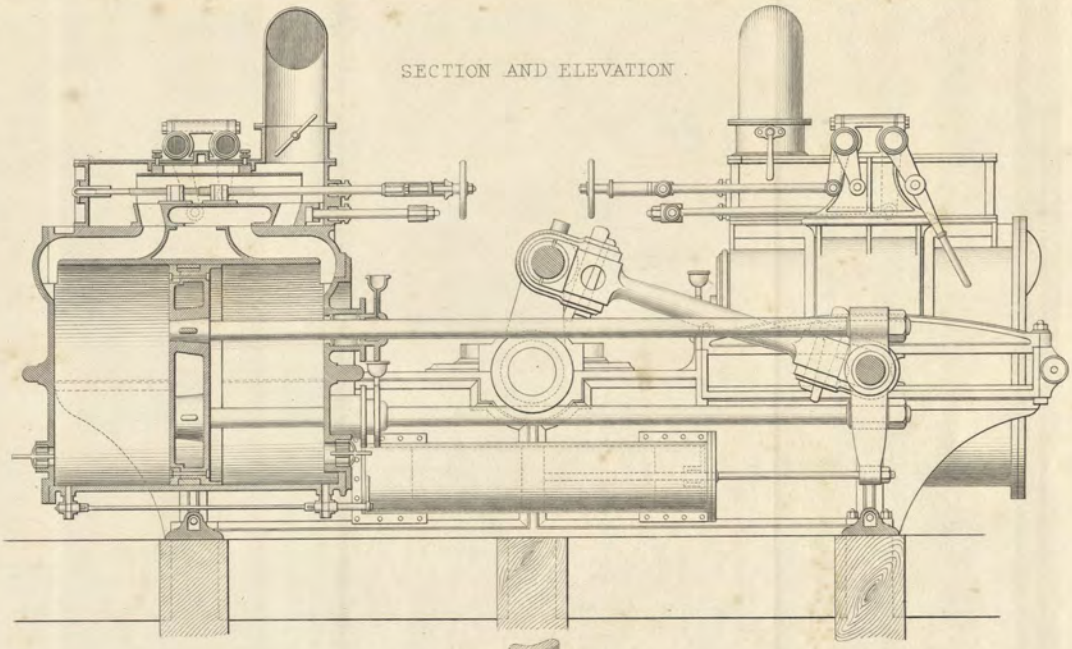

GROUND PLAN.

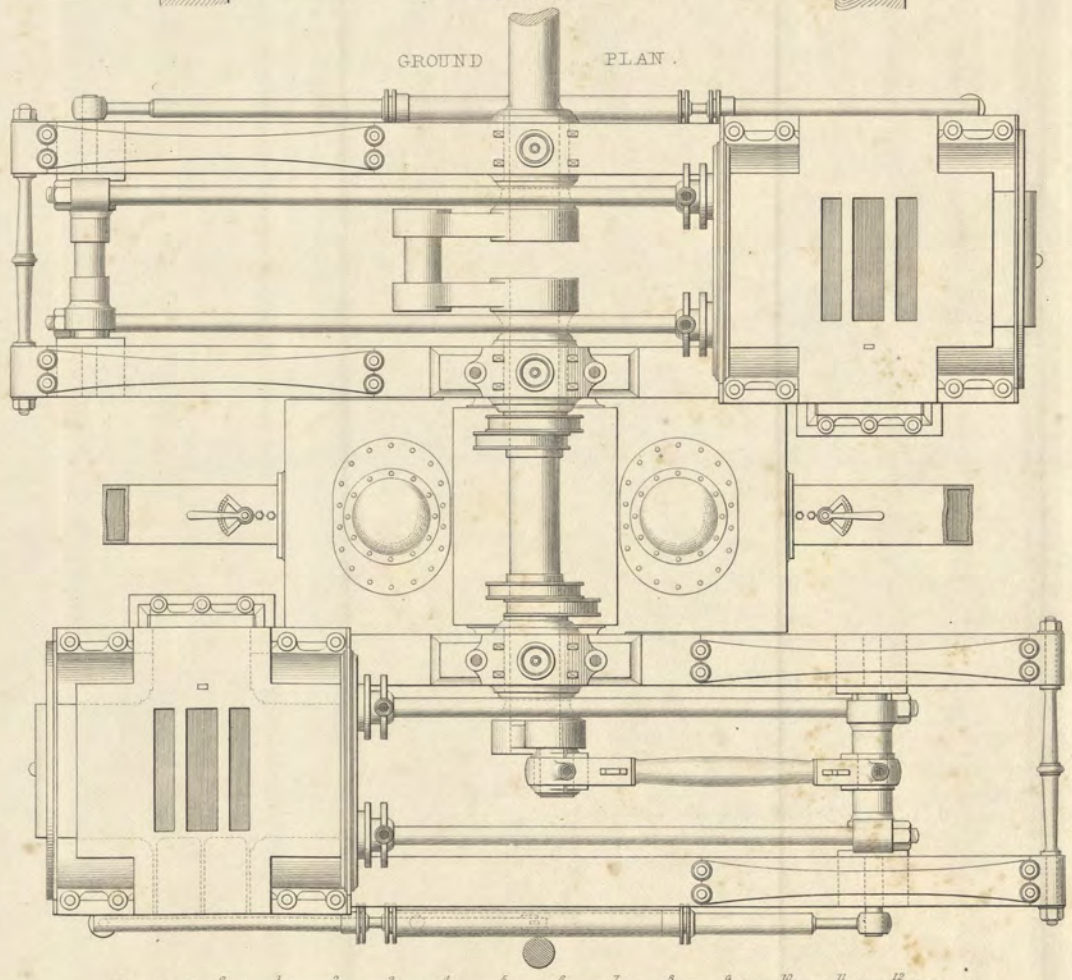

Scale of 0 1 2 3 4 5 6 7 8 9 10 11 12 Feet

H. Adlard, sc.

London: Longman, Brown, Green & Longmans.

SECTIONS, PLAN AND ENGINES OF H.M.S. WASP.

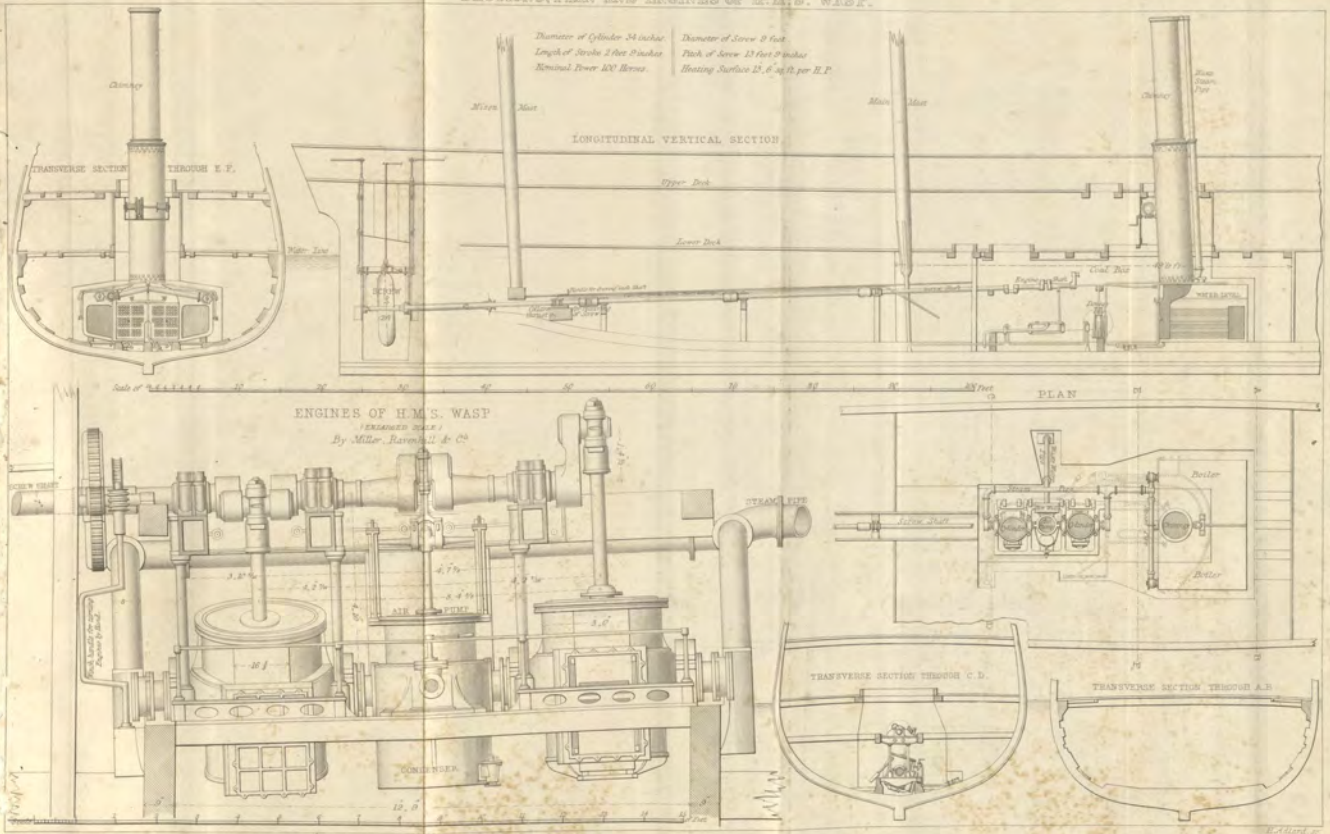

H. Adlard, sc.

Lenden, Longman, Brown, Green & Longmans.

VERTICAL AND HORIZONTAL SECTIONS OF H.M. SCREW STEAM SHIP AJAX.

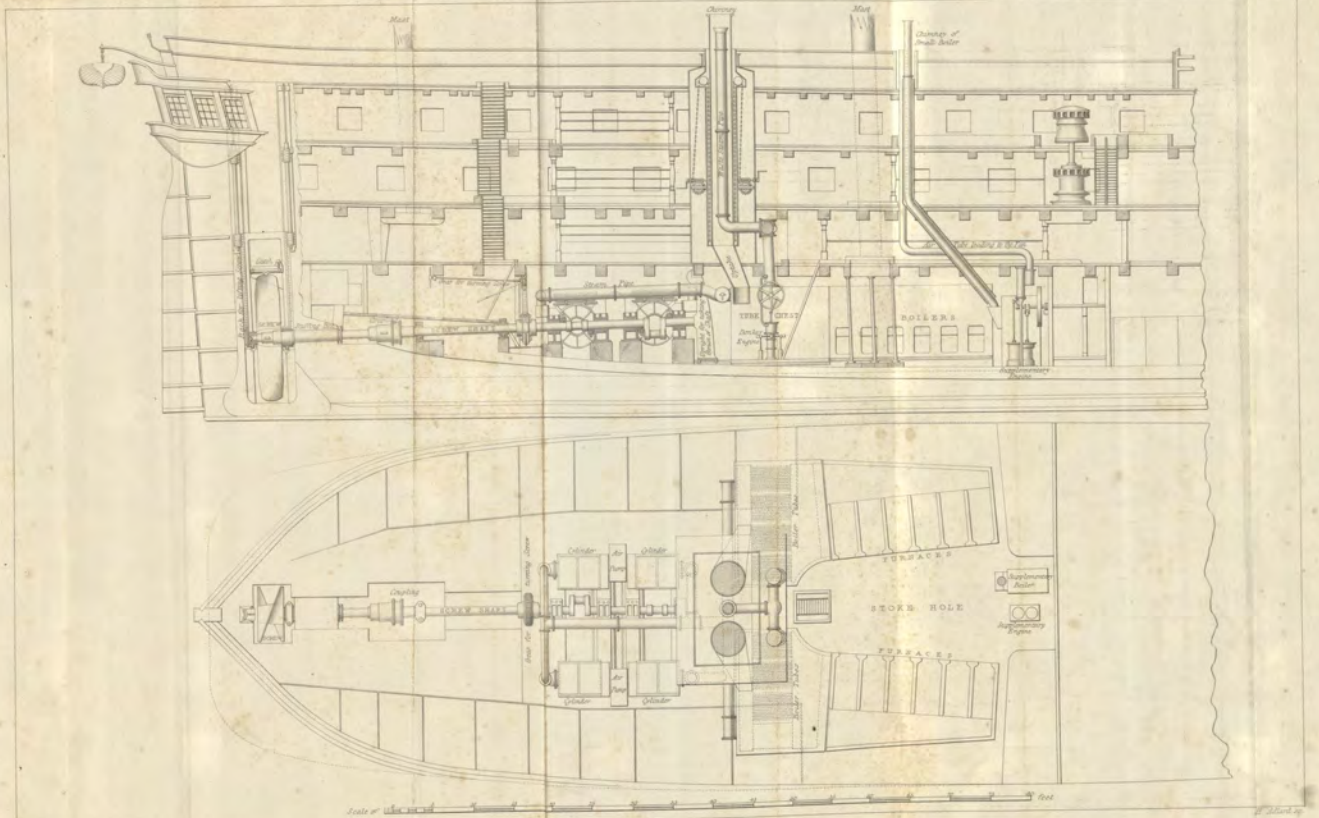

E.J. Powell del.

H. Adlard sc.

London, Longman, Brown, Green & Longmans.

H. M. SCREW STEAM YACHT "FAIRY."

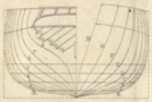

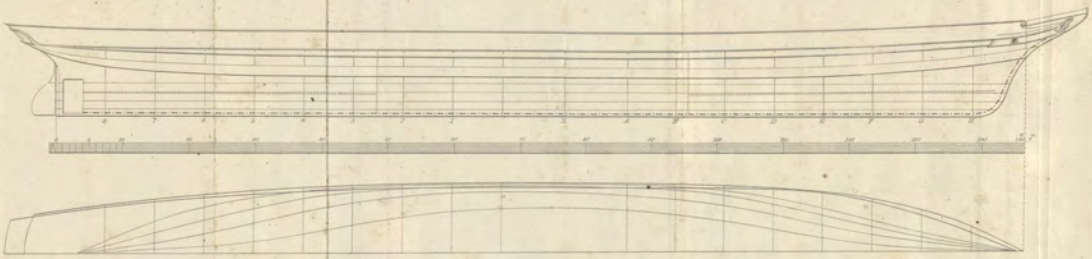

FRENCH MAIL SCREW STEAM PACKET "FAON."

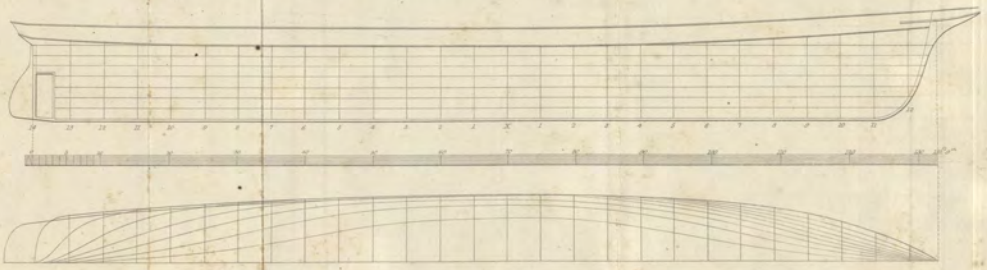

London, Longman, Brown, Green, & Longmans.

W. Allen & Co.

SCREW STEAM YACHT 'FIRE QUEEN' AND FRENCH SCREW DESPATCH STEAMERS 'RICHE' AND 'SENTINELLE'.

SCREW STEAM YACHT 'FIRE QUEEN.'

By R. Napier, Glasgow.

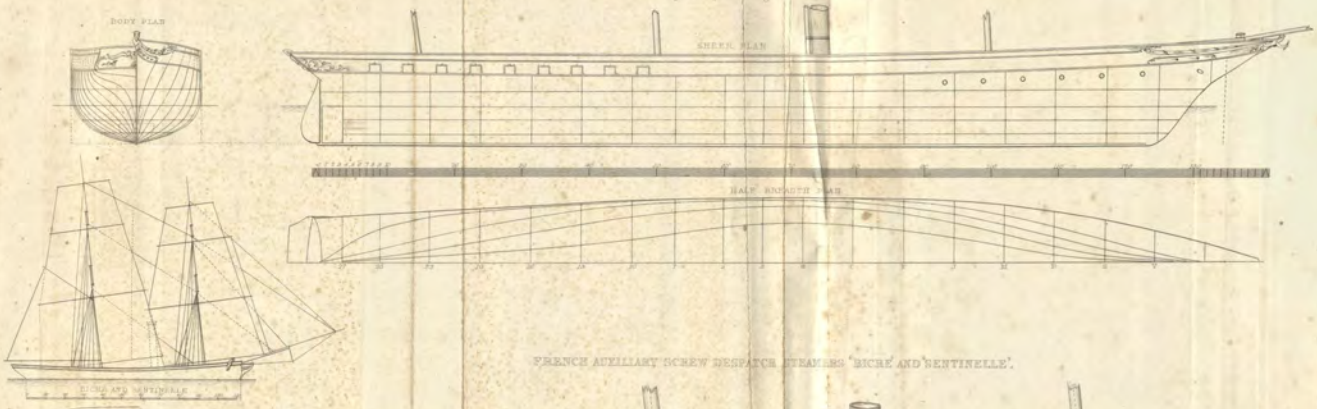

FRENCH AUXILIARY SCREW DESPATCH STEAMERS 'RICHE' AND 'SENTINELLE'.

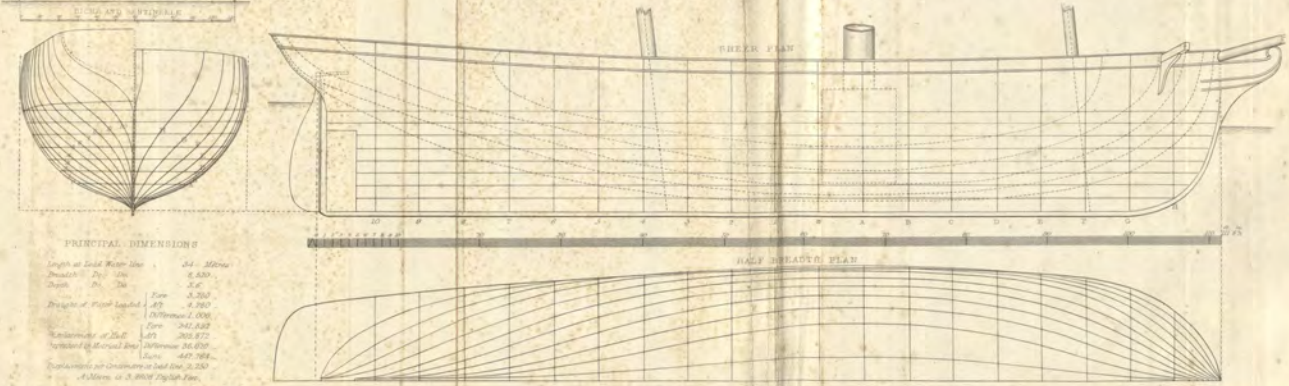

PRINCIPAL DIMENSIONS

Length at Load Water line		34 Metres
Breadth Do. Do.		8.520
Depth Do. Do.		3.6
Draught of Water Loaded	Fore	3.760
	Aft	4.760
	Difference	1.000
Displacement of Hull Reduced to Metrical Tons	Fore	241.832
	Aft	205.872
	Difference	36.020
	Sum	447.764

Displacements per Centimetre at Load line 2.250

A Metre is 3.3808 English Feet.

London: Longman, Brown, Green & Longmans.

R. Akkard sc.

LINES OF THE SCREW STEAMERS 'EUROPEAN' AND 'FRANKFORT.'

SCREW STEAMER 'EUROPEAN.'

By Messrs. Smith & Rodger, Glasgow.

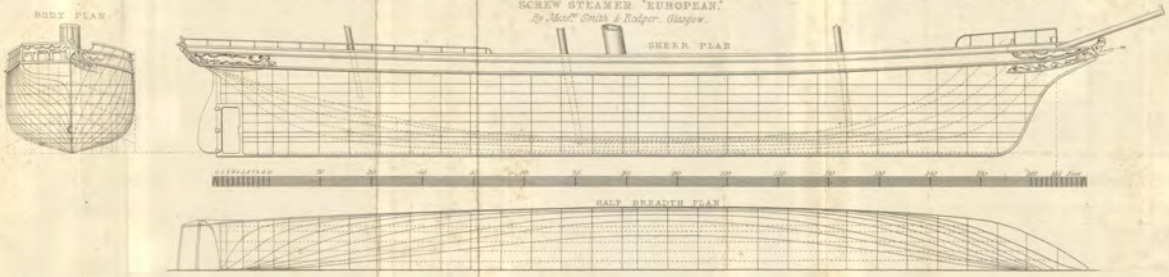

PRINCIPAL DIMENSIONS

	EUROPEAN	FRANKFORT
Keel and Fore Rake	165 feet	190 feet
Breadth of Beam	25 ft.	27½ ft.
Depth of Hold	14½ ft.	16½ ft.
Burthen in Tons C.M.	498 $\frac{23}{94}$	–
Displacement in Tons	–	1150
Area of immersed Midship Section	–	330 sq. ft.
Nominal Power	200 horses	200 horses

SCREW STEAMER 'FRANKFORT.'

By Messrs. Reid & Co. Port Glasgow.

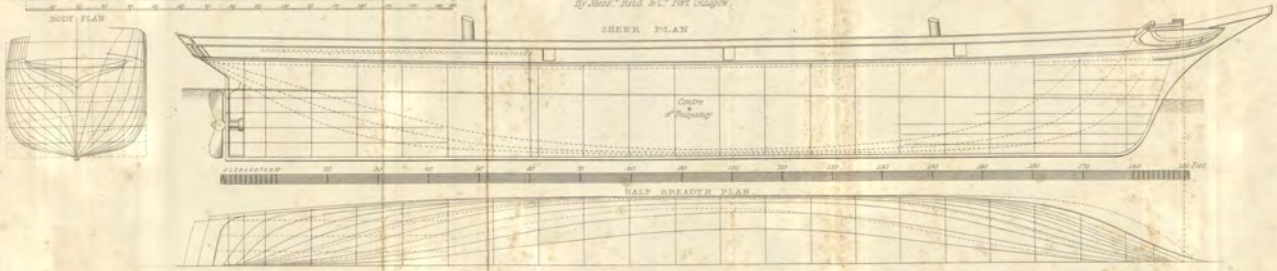

H. Adlard sc.

London: Longman, Brown, Green & Longmans.

LINES OF THE SCREW STEAMERS 'RATTLER' AND 'GREAT BRITAIN.'

H. M. SCREW STEAMER 'RATTLER.'

BODY PLAN.

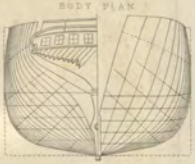

SHEER PLAN.

HALF BREADTH PLAN.

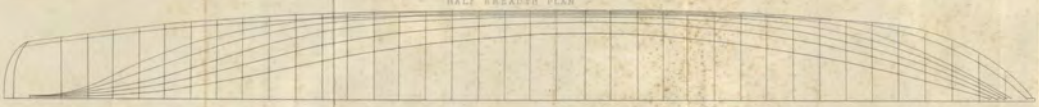

SCREW STEAM SHIP 'GREAT BRITAIN.'

BODY PLAN.

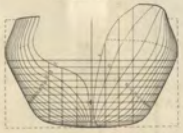

SHEER PLAN.

HALF BREADTH PLAN.

H. Adlard sc.

London: Longman, Brown, Green & Longmans.

APPENDIX.

TABLE I.

DIMENSIONS

OF SCREW STEAM VESSELS IN HER MAJESTY'S NAVY.

NAME.	VESSEL. Tonnage.	Dimensions. Length between the Perpendiculars.	Dimensions. Extreme Breadth.	Mean Draught of Water at Constructor's Deep Immersion.	Area of Midship Section at Constructor's Deep Immersion.	Displacement at Constructor's Deep Immersion.	ENGINES. Diameter of Cylinders.	Length of Stroke.	Number of Cylinders.	Nominal Horse-power.	Weight per Square Inch on the Safety Valve.	Multiple of Gearing.	PROPELLER. Dimensions. Diameter.	Pitch.	Length.	Name of Maker of Engines.
		Ft. Ins.	*Ft. Ins.*	*Ft. Ins.*	*Sq. Ft.*	*Tons.*	*Ins.*	*Ft. Ins.*			*Lbs.*		*Ft. Ins.*	*Ft. Ins.*	*Ft. Ins.*	
AJAX	1761	176 0	48 6½	21 9	706	2912	55	2 6	4 Horiz.	450	6	Direct	16 0	20 0	3 4	Maudslay.
AMPHION	1474	177 0	43 2	19 1½	549·9	2049·5	48	4 0	2 Horiz.	300	10	Direct	15 0	21 0	2 6	Miller.
ARCHER	970	180 0	33 10	14 9	395·6	1337	46	3 0	2 Horiz.	200	10	3 to 1	9 0	7 9	1 4	Miller.
ARROGANT	1872	200 0	45 8¾	20 0	633	2690	24 and 60=55	3 0	2 Horiz. Trunk	360	5	Direct	15 6	15 0	2 6	Penn.
BEE	43	63 0	12 2	3 2	25·8	28·3	20	2 0	1 Beam	10	...	5 to 1	3 1	3 9	...	Maudslay
BLENHEIM	1822	181 2½	48 6	21 9	706	2912	52	3 0	4 Horiz.	450	10	Direct	16 0	20 0	3 4	Seaward.
BRISK	1074	193 7	35 0	13 9	373	1473·9	52	3 6	2 Horiz.	250	...	2·25 to 1	...	...	...	Scott.
CONFLICT	1038	192 6	34 4	15 9	443·2	1628	40	2 0	4 Horiz.	400	16	Direct	13 6	16 6	2 9	Seaward.
CRACKER	...	...	...	...	...	...	28	2 0	2 Horiz.	60	...	2 to 1	...	...	...	Rennie.
DAUNTLESS	1560	218 1	39 9	17 0	548·8	2432·8	84	4 0	2 Horiz.	580	8	2·276 to 1	14 8¾	16 4	2 10	Napier.
DESPERATE	1037	192 6	34 4	15 9	443·2	1628	55	2 6	4 Horiz.	400	8	2·182 to 1	13 0	14 0	2 4	Maudslay.
DWARF	164	130 0	16 6	...	...	...	40	2 8	2 Vert.	90	8	5·15 to 1	5 8	8 0	1 0	Rennie.
EDINBURGH	...	...	...	...	...	...	55	2 6	4 Horiz.	450	...	Direct	...	...	...	Maudslay.
ENCOUNTER	953	190 0	33 2	13 11	396·3	1482	24 and 60=55	2 3	2 Horiz. Trunk	360	...	Direct	12 0	15 0	2 6	Penn.
ENTERPRISE	...	...	...	...	...	...	...	...	Rotary	5	...	Direct	...	...	...	Beale.
EREBUS*	372	105 0	28 10	14 1	327·8	715·3	...	...	2 Loc.	30	...	Direct	...	...	...	Maudslay.
EUPHRATES	...	215 7	40 6	16 7½	570	2402	62	3 6	4 Horiz.	620	...	2 to 1	...	...	...	Seaward.
EUROTAS	...	...	...	...	...	...	44	2 6	4 H. Os.	350	...	Direct	...	...	...	Watt.
FAIRY	312	144 8	21 1½	5 0	74·4	176·5	42	3 0	2 V. Os.	128	...	5 to 1	6 2	8 0	1 4	Penn.
FORTH	...	...	...	...	...	...	49½	2 0	4 Horiz.	350	...	Direct	...	...	...	Rennie.
GREENOCK	1418	213 0	37 4½	15 0	450	1980	71	4 0	2 Horiz.	564	...	2·35 to 1	14 0	13 0	2 2	Scott.
HIGHFLYER	1153	192 0	36 4	15 9	465·6	1737·4	55	4 0	2 Horiz.	250	...	2·7 to 1	...	...	...	Maudslay.
HOGUE	1846	184 0	48 4½	21 9	766	2912	51½	3 0	4 Horiz.	450	10	Direct	16 1	21 1⅛	3 2	Seaward.
HORATIO	1090	154 3	40 2½	19 1½	537	1707	54	3 0	2 Horiz.	250	13	1·947 to 1	14 0	13 6	2 2	Seaward.
HORNET	...	...	...	...	...	...	27	2 0	2 Horiz.	60	...	1·61 to 1	...	...	...	Maudslay.
INVESTIGATOR	...	...	...	...	...	...	...	...	Rotary	5	...	Direct	...	...	...	Beale.
MEGÆRA	1395	207 0	37 10	16 0	487	2048	49½	2 0	4 Horiz.	350	8	Direct	13 3½	16 0	2 8½	Rennie.
MINX	303	131 0	22 1	5 0	76·87	192	34	2 9	2 V. Os.	100	10	4 to 1	4 6	5 0	1 0	Miller.
Do., New Engines*	...	...	...	...	...	...	...	...	2 Horiz.	10	60	Direct	5 0	3 8	...	Seaward.
MIRANDA	1089	196 0	34 0	13 6	374	1522·7	56	3 9	2 Horiz.	250	...	2·43 to 1	...	...	...	Napier.
NIGER	1672	194 4	34 8	15 6	426·4	1454	47¼	1 10	4 Horiz.	400	8	Direct	12 6	17 4½	2 6	Maudslay.
PHŒNIX	809	174 7	31 10	12 3	287	1024	62	4 6	2 V. Os.	260	6	4 to 1	11 10⅝	9 8	1 7	Penn.
PLUMPER	490	140 0	27 6	11 4½	218·8	577	27	2 0	2 V. Os.	60	14	2·5 to 1	9 0	7 0	1 2	Miller.
RATTLER	888	176 6	32 8½	11 5½	281·8	894	40½	4 6	4 Vert.	200	5	4 to 1	10 0	11 0	1 3	Maudslay.
REYNARD	546	147 8	27 10	11 6	239	655·9	28	2 0	2 Horiz.	60	14	2 to 1	8 9	8 0	1 4	Rennie.
RIFLEMAN	486	150 0	26 7	10 11	21·87	624	46	3 0	2 Horiz.	200	10	3 to 1	8 0	9 0	1 6	Miller.
Do., New Engines	...	...	...	...	...	...	34	2 9	2 V. Os.	100	10	2·5 to 1	8 0	9 0	1 6	Miller.
SANS-PAREIL	2334	200 6	52 1	22 9	920·2	3484·1	44	2 6	4 H. Os.	350	...	Direct	...	...	...	Watt.
SEAHORSE	...	...	...	...	...	...	49½	2 0	4 Horiz.	350	...	Direct	...	...	...	Rennie.
SHARPSHOOTER	503	150 0	26 7½	10 6	228·4	629	46	3 0	2 Horiz.	200	10	3 to 1	8 0	9 0	1 6	Miller.
SIMOOM	1880	246 0	41 0	17 0	567·2	2789	44	2 6	4 H. Os.	350	10	Direct	...	...	...	Watt.
TEAZER	296	130 0	21 9½	5 0	76·87	192	34	2 9	2 V. Os.	100	10	4 to 1	4 6	5 10	1 0	Miller.
Do., New Engines	...	...	...	...	...	...	27	2 6	2 V. Os.	40	9	3·73 to 1	5 0	7 0	1 2	Penn.
TERMAGANT	1547	210 1	40 6	16 7½	570	2312	62	3 6	4 Horiz.	620	14	2 to 1	15 6	18 0	3 0	Seaward
TERROR*	...	...	...	...	...	...	...	...	2 Loc.	30	...	Direct	...	...	...	Maudslay
VULCAN	1764	220 0	41 5	17 2	527	2396·1	49½	2 0	4 Horiz.	350	8	Direct	14 0	16 6	2 9	Rennie.
WASP	970	180 0	33 10	14 9	395·6	1337	34	2 9	2 V. Os.	100	...	Direct	...	...	...	Miller.

Note.—Those marked thus * have high pressure engines. The Enterprise and Investigator are pinnaces. The original tonnage of the Dauntless was 1497 tons, and the original length 210 ft.; she was lengthened by the stern to enable the screw to act in a more efficient manner.

TABLE II.

PERFORMANCE

OF SCREW STEAM VESSELS IN HER MAJESTY'S NAVY.

VESSEL.							ENGINES.							
NAME.	Speed per Hour.	Date of Trial.	Where tried.	Mean Draught of Water at the Time of Trial.	Area of Midship Section at the Time of Trial.	Displacement at the Time of Trial.	Revolutions per Minute.		Mean Pressure in Cylinder per Square Inch by Indicator.				Mean Height of Engine Barometer.	Horse-power indicated.
							Intended by Manufacturer.	At the Time of Trial.	Steam above Atmospheric Line.	Steam below Atmospheric Line.	Vacuum measured from Atmospheric Line.	Total on Piston.		
	Knots.			*Ft. Ins.*	*Sq. Ft.*	*Tons.*			*Lbs.*	*Lbs.*	*Lbs.*	*Lbs.*	*Ins.*	
AJAX	6·458	Dec. 12. 1848	Stokes' Bay	21 4	750	2328	45	42	2·91	0·45	12·07	14·53	26	878·7
Do.	7·147	August 6. 1849	Stokes' Bay	22 6½	807	3090	...	48	2·84	0·41	9·81	12·24	24½	845·9
AMPHION	6·75	July 6. 1847	Nore	19 0	546	2025	48	45	4·87	0·30	10·43	15	25	592·2
ARCHER	7·818	Oct. 11. 1849	Thames	14 1	372	1238	48	36·16	5·36	0·70	11·14	15·8	26	345
ARROGANT	8·295	April 12. 1849	Stokes' Bay	18 10½	580	2444	60	55·5	2·46	0·45	11·02	13	27	623·3
BEE	6·822	Oct. 25. 1842	Thames	3 5½	28·2	33·2	...	48	...	...	...	...	27¾	
BLENHEIM	5·816	June 5. 1849	Stokes' Bay	21 1½	738	2790	45	43	3·62	0·85	11·36	14·13	27	938·4
BRISK	...	...	...	...	...	...	40							
CONFLICT	9·289	Nov. 7. 1848	Nore	14 6	402	1443	75	68	5·95	0·31	8·49	14·19	25	777·2
CRACKER	...	...	...	...	...	...	60							
DAUNTLESS	7·366	August 28. 1848	Stokes' Bay	16 4	522·3	2240·5	30	24·3	2·43	0·44	10·43	12·42	25½	810·9
Do., when lengthened	10·293	May 13. 1850	Stokes' Bay	16 4	522·3	2251·3	...	30	4·28	0·24	11·07	15·11	26½	1218
Do.	10·016	Sept. 12. 1850	Stokes' Bay	16 7	542	2350	...	31	5·2	0·44	11·41	16·17	...	1346·9
Do.	10·133	Oct. 12. 1850	Stokes' Bay	17 3	570	2480	...	30·5	5·77	0·07	10·5	16·2	...	1327·6
DESPERATE	9·432	May 25. 1850	Thames	14 3	392	1405	40	34·23	3·79	0·48	10·88	14·19	24	699·4
Do.	10·766	July 18. 1850	Nore	14 2	388	1393	...	37·77	4·65	0·45	12·21	16·41	26½	892·5
Do.	8·875	July 18. 1850	Nore	14 2	388	1293	...	30·16	5·8	0·21	12·32	17·91	26	388·9
DWARF	10·537	May 15. 1843	Thames	5 6	44	98	35	35·5	3·45	0·30	11·85	15	27	216
EDINBURGH	...	...	...	...	...	...	45							
ENCOUNTER	10·254	Nov. 2. 1848	Stokes' Bay	11 9½	318	1192	80	78	2·88	0·50	10·93	13·31	26	672·7
Do.	9·375	Nov. 24. 1848	Stokes' Bay	12 6	341	1290	...	72	3·96	0·40	10·29	13·85	25	646·1
ENTERPRISE	estimated at 6	May 3. 1848	Thames.											
PINNACE														
EREBUS	estimated at 3·5	April 1845	Thames.											
EUPHRATES	...	...	...	...	...	...	35							
EUROTAS	...	...	...	...	...	...	55							
FAIRY	13·324	April 5. 1845	Thames	4 10	71·5	168	36·5	51·6	...	...	...	14	...	363·8
Do.	11·891	Feb. 24. 1847	Stokes' Bay	5 10	82	196	...	44	...	...	...	14·5	...	321·4
FORTH	...	...	...	...	...	...	55							
GREENOCK	9·59	Aug. 30. 1850	Plymouth	14 2½	419	1835	42	32	3·78	...	7·93	11·71	...	719·3
Do.	9·63	July 30. 1850	Plymouth	14 4½	426	1865	42	33	2·64	0·53	9·05	11·16	...	707
HIGHFLYER	...	...	...	...	...	...	31·5				...			
HOGUE	by Log 7·5	July 26. 1848	Stokes' Bay	22 10	820	3155	45	50	...	...	...	...	26½	
Do.	7·809	Dec. 13. 1850	Stokes' Bay	22 4	799	3054	...	47	2·72	1·04	9·56	11·24	25	792·6
Do.	8·328	Dec. 18. 1850	Stokes' Bay	22 6	805	3081	...	56	1·85	0·97	8·61	9·49	25½	797·3
HORATIO	8·855	June 17. 1850	Nore	15 4½	391	1175	45	41·28	6·66	...	9·43	16·09	26	553·1
HORNET	...	...	...	...	...	...	62							
INVESTIGATOR	estimated at 6	May 3. 1848	Thames.											
PINNACE														
MEGÆRA	10·241	March 28. 1850	Thames	13 3½	383	1354	55	74·21	3·16	0·53	10·74	13·37	27	925·7
MINX	9·137	July 1. 1848	Thames	5 2½	82	203	55	63·5	3·01	1·02	10·2	12·19	26	234·5
Do., New Engines	4·515	Sept. 24. 1849	Thames	5 2½	82	203	...	140	...	...	...	39	...	31·6
Do., Disc Engine	5·148	Dec. 12. 1849	Thames	5 2½	82	203	...	158						
MIRANDA	...	...	...	...	...	...	32							
NIGER	9·494	March 19. 1849	Nore	14 10	403	1362	75	68·8	5·39	0·19	10	15·2	...	827·8
Do.	10·427	May 15. 1849	Stokes' Bay	14 6½	392	1323	...	74·32	4·78	0·15	11	15·63	24½	919·6
Do.	8·708	June 18 1849	At Sea	15 6	426·4	1454	...	67·66	2·07	1·01	10·69	11·75	23½	628·3
Do.	9·906	July 12. 1850	Stokes' Bay	14 11½	406	1375	...	70	4·31	0·71	10·7	14·3	...	792·4
PHŒNIX	7·106	August 24. 1848	Stokes' Bay	13 9½	347	1225	23	17	2·59	1·75	12·82	13·66	26	382·4
Do.	7·686	March 7. 1849	Stokes' Bay	13 6	339	1190	...	20·5	2·96	0·76	11·76	13·96	26	471·3
Do.	8·74	July 6. 1849	Stokes' Bay	13 1½	327	1140	...	24	1·82	0·99	11·54	12·37	26½	488·9
PLUMPER	6·369	Sept. 1. 1848	Thames	11 5	219·6	583	62	39·66	10·44	0·25	11·97	22·16	24½	121·7
Do.	7·448	Nov. 13. 1848	Stokes' Bay	10 11	264	539	...	46	10·21	0·2	13·19	23·2	26½	148·1
Do.	6·497	Dec. 1. 1848	Stokes' Bay	12 3	241	652	...	44·8	11·03	0·14	13·16	24·05	26½	149·5
Do.	7·228	April 9. 1849	Stokes' Bay	11 1½	211	558	...	54·5	8	0·15	10·56	18·41	26½	139·3
RATTLER	10·074	June 27. 1844	Thames	11 8	274	870	25	26	2·62	0·36	11·26	13·42	...	428
Do.	9·639	Jan. 23. 1845	Thames	13 6	330	1078	...	26·98	2·46	0·45	11·19	13·2	...	436·7
REYNARD	8·233	July 14. 1848	Thames	9 6	184	478	60	54·43	...	...	...	20·27	..	164·7
Do.	7·3	May 25. 1849	Stokes' Bay	10 11	222	604	...	56	7·91	...	10·47	18·38	26½	153·6
RIFLEMAN	8·096	...	Stokes' Bay	9 3	173	484	48	39·75	4·05	0·87	11·32	14·5	26	348·3
Do.	9·499	Dec. 13. 1847	Stokes' Bay	9 3	173	484	...	43	3·54	0·66	11·24	14·12	25½	366·9
Do., New Engines	8·011	May 20. 1848	Thames	9 3½	175	487	...	44	4·33	0·58	10·37	14·12	26½	188
Do.	7·977	June 22. 1848	Thames	10 2½	199	565	...	39·5	5·92	0·37	10·34	15·89	27	189·9
SANS-PAREIL	...	...	...	...	...	...	55							
SEAHORSE	...	...	...	...	...	...	55							
SHARPSHOOTER	9·782	March 9 1847	Thames	9 1½	192	505	48	46·9	4·13	0·74	11·01	14·4	26	408·1
Do.	9·189	July 3. 1847	Stokes' Bay	9 3	196	518	...	41·5	4·15	0·72	11·13	14·56	26	365·2
SIMOOM	8·747	Feb. 8. 1851	Stokes' Bay	16 7½	555	2700	55	52·5	4·06	0·26	7·53	11·33	26	548·2
TRAZER	6·315	June 8. 1847	Thames	5 3	82·9	205	55	50	...	...	...	11·6	...	175·6
Do., New Engines	7·685	Oct. 6. 1848	Thames	5 3	82·9	205	...	51·5	4·48	0·61	10·48	14·35	26½	128·2
TERMAGANT	9·166	June 25. 1849	Stokes' Bay	15 3	517	2050	35	33	5·67	0·41	9·47	14·73	26½	1245·2
Do.	6·518	Nov. 13. 1849	Stokes' Bay	17 0	584	2386	...	26	3·28	0·45	8·19	11·02	26½	734
Do.	8·554	Nov. 19. 1849	Stokes' Bay	16 11	580·6	2370	...	34·5	2·5	0·64	9·39	11·25	27½	907·8
Do.	8·41	Dec. 12. 1849	Stokes' Bay	17 0	584	2386	...	32	5·14	0·4	8·75	13·49	27½	1105·8
Do.	9·51	Jan. 17. 1850	Stokes' Bay	17 1	587·4	2403	...	36·5	5·07	0·51	9·89	14·45	27	1351·1
TERROR	estimated at 3·5													
VULCAN	9·605	Aug. 24. 1849	Thames	15 6	465	2076	55	66·5	2·87	0·8	10·71	12·78	27	793
WASP	...	...	...	...	...	...	60							

TABLE III.

PERFORMANCE

OF SCREW STEAM VESSELS IN HER MAJESTY'S NAVY.

NAME.	PROPELLER. Revolutions per Minute. Intended by Manufacturer.	PROPELLER. Revolutions per Minute. At the Time of Trial.	Rate in Knots per Hour.	Slip. In Knots per Hour.	Slip. Per Cent.	GENERAL RATIOS. Vessel's Length to Breadth.	Screw's Pitch to Diameter.	Midship Section to Screw's Disc.	Nominal Power to Midship Section.	Nominal Power to (Displt.)$^{\frac{2}{3}}$	Indicated Power to Midship Section.	Indicated Power to (Displt.)$^{\frac{2}{3}}$	COEFFICIENTS OF PERFORMANCE, assuming the Speed to vary directly as the Cube Root of the Power, and inversely as The Area of the Midship Section (Speed)^3 × Mid. Sec. / Nominal Power.	The Area of the Midship Section (Speed)^3 × Mid. Sec. / Indicated Power.	(Displacement)$^{\frac{2}{3}}$ (Speed)^3 × (Displt.) / Nominal Power.	(Displacement)$^{\frac{2}{3}}$ (Speed)^3 × (Displt.) / Indicated Power.
AJAX	45	42	8·285	1·827	22·	3·625	1·25	3·73	0·69	2·25	1·17	4·39	448·8	229·8	119·6	61·3
*Do. 16 0×17 11×3 2	...	48	8·482	1·335	15·74	...	1·12	4·01	0·56	2·12	1·05	3·98	645·7	348·2	172·1	91·5
AMPHION	48	45	9·321	2·571	27·58	4·1	1·4	3·09	0·55	1·87	1·08	3·69	559·7	283·5	164·	83·1
ARCHER	144	108·4	8·293	0·475	5·73	...	0·86	5·84	0·54	1·73	0·93	2·99	888·8	515·3	275·4	159·7
ARROGANT	60	55·5	8·211	negative 0·084	negative 1·02	4·37	0·96	3·07	0·62	1·98	1·07	3·43	919·5	531·1	287·6	166·1
BEE	...	240	8·877	2·055	23·15	5·17	1·21	3·76	0·35	0·97	...	...	895·3	...	327·9	
BLENHEIM	45	43	8·483	2·667	31·4	3·73	1·25	3·67	0·61	2·27	1·27	4·73	322·6	154·7	85·6	41·5
BRISK	90	...	...	...	...	5·53										
CONFLICT	75	68	11·067	1·778	16·06	5·6	1·22	2·81	0·99	3·13	1·93	6·08	805·5	414·5	225·8	131·6
CRACKER	120															
DAUNTLESS	70	55·3	9 818	2·452	24·97	5·28	1·22	3·09	1·11	3·38	1·55	4·73	359·9	257·4	117·9	84·4
Do., when lengthened	...	68·28	12·123	1·83	15·09	5·48	...	...	...	3·37	2·33	7·09	982	467·6	322·9	153·8
Do.	68·28	70·556	11·367	1·351	11·89	5·48	1·11	3·18	1·07	3·28	2·48	7·62	939	404·3	306·2	131·9
Do.	...	69·418	11·812	1·679	14·21	...	1·17	3·35	1·02	3·17	2·33	7·25	1022·5	446·7	328·7	143·6
DESPERATE	87·28	74·69	10·314	0·882	8·55	5·6	1·08	2·95	1·02	3·19	1·78	5·57	822·3	470·3	263·1	150·5
Do.	87·28	82·414	11·381	0·615	5·4	5·6	1·08	2·92	1·03	3·21	2·3	7·15	1208·7	541·7	388·6	174·1
Do.	...	65·8	9·086	0·212	2·33	...	...	2·92	0·51	1·6	1·02	3·12	1356·1	687·4	435·9	224·2
DWARF	180	182·8	14·427	3·89	26·96	7·87	1·41	1·74	2·04	4·23	4·91	10·16	571·9	238·3	276·3	115·1
EDINBURGH	45															
ENCOUNTER	80	78	11·641	1·287	11·15	5·73	1·25	2·81	1·13	3·2	2·11	5·98	952·3	509·6	326·6	180·1
Do.	...	72	10·653	1·278	11·99	...	...	3·01	1·06	3·03	1·89	5·45	780·4	434·8	271·3	151·1
ENTERPRISE Pinnace																
EREBUS	...	...	...	...	...	3·64										
EUPHRATES	70	...	...	...	...	5·32										
EUROTAS	55															
FAIRY	...	258	20·359	7 035	34·55	6·84	1·5	3·2	1·79	4·2	5·06	11·94	1322	454·8	562·6	197·3
Do. 6 2×8 0×1 4	...	220	17·36	5·469	31·5	...	1·29	2·74	1·56	3·29	3·91	9·52	1077·2	428·9	443·2	176·5
FORTH	55															
GREENOCK	98·7	75·2	9·643	0·053	0·54	5·69	0·93	2·72	1·34	3·76	1·71	4·8	655·2	513·8	234·4	183·8
Do.	98·7	77·55	9·944	0·314	3·16	5·69	0·93	2·77	1·32	3·72	1·66	4·67	674·5	538·1	239·9	191·4
HIGHFLYER	85	...	...	...	...	5·28										
HOGUE	45	50	9·864	2·364	23·96	3·8	1·25	4·03	0·55	2·09	...	...	763·7	...	201·7	
Do.	45	47	9·799	1·99	20·31	3·8	1·31	3·93	0·56	2·14	0·99	3·77	845·5	480	222·7	126·5
Do.	...	56	10·352	2·029	19·59	...	1·17	3·97	0·56	2·13	0·99	3·77	1033·2	583·2	271·8	153·4
HORATIO	87·62	80·37	10·306	1·451	14·08	...	0·93	2·54	0·64	2·24	1·41	4·97	1089·9	490·8	309·2	139·8
HORNET	100															
INVESTIGATOR Pinnace																
MEGÆRA	55	74·21	11·711	1·47	12·55	5·47	1·2	2·77	0·91	2·61	2·42	6·9	1175·3	444·4	411·7	155·7
MINX	220	254·12	12·533	3·396	27·09	5·93	1·11	5·15	1·22	2·89	2·86	6·79	625·5	268·7	263·5	112·3
Do., New Engines	...	140	5·082	0·547	10·8	...	0·73	4·17	0·12	0·29	0·38	0·91	754·7	238·8	317·9	100·6
Do., Disc Engine	...	158	5·713	0·565	9·89	...	0·73	4·17	0·12	0·29	...	...	1118·7	...	471·2	
MIRANDA	77·72	...	...	...	...	5·76										
NIGER	75	68·8	11·537	2·043	17·7	5·6	1·36	3·28	0·99	3·25	2·05	6·74	862·2	416·6	262·9	127
Do.	...	74·32	12·462	2·035	16·33	...	...	3·19	1·02	3·32	2·34	7·63	1111	483·2	341·5	148·5
Do.	...	67·66	11·345	2·637	23·24	...	...	3·47	0·94	3·12	1·47	4·89	703·9	418·1	211·9	134·9
Do.	75	70	11·997	2·091	17·43	5·6	1·39	3·3	0·98	3·23	1·95	6·41	986·6	498·1	300·5	151·7
PHŒNIX	92	68	8·496	1·39	16·36	5·48	1·05	3·06	0·75	2·27	1·1	3·34	478·9	325·6	158	107·4
Do. 12 0×11 0×1 10	...	82	8·897	1·211	13·61	...	0·92	2·99	0·76	2·32	1·39	4·19	592	326·6	196·1	108·2
Do 11 10½×9 8×1 7	...	96	9·153	0·413	4·51	...	0·81	2·97	0·79	2·38	1·49	4·43	839·7	446·5	284·2	149
PLUMPER	155	99·15	6·846	0·477	6·96	5·09	0·77	3·45	0·27	0·86	0·55	1·74	945·6	477·0	300·5	148·1
Do. 9 0×5 7×1 0	...	115	6·333	negative 1·085	negative 17·13	...	0·62	3·2	0·29	0·91	0·72	2·34	1387·8	562·2	450·5	182·5
Do.	...	112	6·168	negative 0·339	negative 5·33	...	...	3·78	0·25	0·79	0·62	1·99	1101·5	442·1	343·7	137·9
Do. 8 9½×4 6½×0 10	...	136·25	6·103	negative 1·125	negative 18·43	...	0·52	3·48	0·28	0·88	0·66	2·05	1327·4	571·9	426·6	183·7
RATTLER	100	104	11·284	1·21	10·72	5·39	1·1	3·49	0·73	2·19	1·56	4·69	1490·6	654·5	465·8	217·7
Do.	...	107·92	11·709	2·07	17·67	...	...	4·2	0·6	1·9	1·32	4·15	1477·7	676·7	470·8	215·6
REYNARD	120	108·86	8·59	0·352	4·09	5·3	0·91	3·06	0·32	0·98	0·89	2·69	1714·4	624·6	569·6	207·5
Do. 8 9×8 0×1 4	...	112	8·009	0·709	8·85	...	0·81	3·55	0·27	0·81	0·69	2·15	1439·3	562·2	463·3	181
RIFLEMAN	144	119·25	10·586	2·49	23·52	5·64	1·12	3·44	1·15	3·24	2·01	5·65	459	263·6	163·6	93·9
Do.	...	129	11·452	1·953	17·05	...	1·12	3·44	1·15	3·24	2·12	5·95	741·4	404·1	264·2	144
Do., New Engines	...	110	9·765	1·754	17·96	...	1·12	3·48	0·57	1·61	1·07	3·04	899·7	478·6	318·2	169·3
Do. 9 0×9 0×1 6	...	98·75	8·766	0·789	9	...	1	3·12	0·5	1·46	0·95	2·78	1010·1	531·9	346·9	182·6
SANS-PAREIL	55	...	...	...	...	3·84										
SEAHORSE	55															
SHARPSHOOTER	144	140·7	12·49	2·708	21·68	5·63	1·12	3·81	1·04	3·15	2·12	6·43	898·6	440·4	296·8	145·4
Do.	...	124·5	11·052	1·863	16·85	6	1	3·08	1·02	3·1	1·85	5·66	760·4	416·4	250·2	137·0
SIMOOM	55	52·5				...	...	...	0·63	1·81	0·99	2·83	1061·2	677·5	370·8	236·7
TEAZER	220	200	11·507	5·192	45·12	5·96	1·23	5·21	1·2	2·88	2·11	5·05	238·8	118·9	87·6	49·9
Do., New Engines	...	192·09	13·263	5·578	42·05	...	1·4	4·22	0·48	1·15	1·54	3·68	940·6	293·4	394·5	123·1
TERMAGANT	70	66	11·718	2·552	21·77	5·19	1·16	2·74	1·2	3·84	2·4	7·72	642·2	319·7	200·4	99·8
Do.	...	52	9·232	2·731	29·58	...	...	3·09	1·06	3·47	1·25	4·11	258·8	213·6	79·1	66·8
Do.	...	63	11·185	2·631	23·52	...	...	3·08	1·07	3·48	1·56	5·11	586·4	400·3	179·4	122·6
Do.	...	64	11·363	2·953	25·98	...	...	3·09	1·06	3·47	1·89	6·19	560·3	314·1	171·3	96·1
Do.15 6×17 2½×2 10	...	73	12·391	2·881	23·25	...	1·11	3·11	1·05	3·45	2·3	7·53	814·9	373·9	248·8	114·2
TERROR																
VULCAN	55	66·5	10·823	1·218	11·25	5·31	1·18	3·02	0·75	2·15	1·7	4·87	1177·2	519·6	412·0	181·8
WASP	121	...	...	...	...	5·32										

* The figures 16 0, 17 11, and 3 2 represent the new pitch, diameter and length of the screw, in feet and inches, in the second trial; and corresponding figures are given in the case of the new screws of the other vessels. In the Minx the diameter of the second screw was 5 feet, and pitch 3 feet 5 inches; in the Teazer the diameter of the second screw was 5 feet, pitch 7 feet, and length 14 inches.

EXPLANATION OF THE TABLES

OF

THE DIMENSIONS AND PERFORMANCE OF THE SCREW STEAM VESSELS OF HER MAJESTY'S NAVY.

THE foregoing tables exhibit the principal dimensions and the actual performance of the whole of the screw steam vessels in Her Majesty's navy. The first table gives the dimensions of the hulls and machinery of the several vessels; also the draught of water at the constructor's deep immersion, the area of midship section of that part of the vessel immersed in the water at the constructor's deep immersion, or what is sometimes termed the load water line, the pressure of the steam in the boiler, or weight per square inch upon the safety valve, the nominal power of the engines, and other similar quantities or dimensions of a fixed and invariable character. These several *data* are so clearly set forth in the table, that any of the particulars recorded will, on inspection, be at once apprehended, and further explanation of the contents of this table, therefore, does not appear to be required.

In the second and third tables, the performance of the several screw steam vessels in Her Majesty's navy, as ascertained at different times by experiment, is set forth. And here it will be observed, that the power exerted and the speed produced are not the same in all the different trials, but in some cases a better, and in other cases a worse, result appears in the different experiments recorded; showing, where there has been no change in the screw itself, either that the vessel has declined from her original speed, perhaps by a gradual lapse into disrepair, or else that, after the original trial, certain adjustments have been made in the machinery or form of the vessel, by which a better performance has been obtained. Thus in 1845 the speed of the Fairy was 13·324 knots per hour, and in 1847, 11·891 knots per hour,—the actual or indicated power being 363·8 horses in the one case, and 321·4 horses in the other; but in the first trial the diameter of the screw was 5 ft. 4 in., and in the second trial 6 ft. 2 in., so that the difference in the result must be attributed, in some measure at least, to the different size of screw employed. In the first trial of the Termagant, the speed was 9·166 knots per hour, and in the next trial only 6·518 knots per hour, the effective or indicator power being 1245·2 horses in the first case, and 734 in the second; but as these trials took place within a few months of one another, the falling off cannot be imputed to disrepair of the machinery, but must rather be attributed to the use of bad coal, or other accidental causes. In the first trial of the Ajax the speed was 6·458 knots per hour, and in the second trial 7·147 knots per hour; the indicator power being 878·7 horses in the first experiment, and 845·9 horses in the second experiment,—so that here we have more speed produced in the second experiment, with less power. But in the first experiment, the diameter of the screw being 16 ft., the pitch was 20 ft.; whereas, in the second experiment, with the same diameter, the pitch was 17 ft. 11 in., showing thereby that the smaller pitch was the more advantageous. In the first trial of the Dauntless, the speed was 7·366 knots per hour, and in the second trial 10·293 knots per hour, the actual or indicator power being 810·9 and 1218 horses respectively. In the Phœnix, the speed on the first trial was 7·106 knots, with 382·4 actual horses' power, and on the third trial the speed was 8·74 knots, with 488·9 actual horses' power. In other cases a similar result may be observed, sometimes accompanied with a change in the dimensions of the screw, and in other cases not; the difference in the latter class of cases being explicable, on the supposition that from some defective adjustment of the engine, or from the use of bad coal, the vessel in the first trial was not working with her largest efficiency. The most remarkable of the results are those exhibited by the Rifleman and Teazer. In the first trial of the Rifleman the speed attained was 8·096 knots, with 348·3 actual horses' power, and in the third trial the speed attained was 8·011 knots, with 188 actual horses' power,—the diameter and pitch of the screw being the same in both cases. In the first trial of the Teazer the speed attained was 6·315 knots, with 175·6 actual horses' power, and in the second trial the speed attained was 7·685 knots, with 128·2 actual horses' power. In both of these vessels we have more speed produced in the second experiments than in the first, and with less engine power, notwithstanding that the immersion or draft of water remained without alteration. This result is to be imputed to the circumstance that, after the completion of the first experiments, and before the commencement of the second, the sterns of both vessels were made finer, and the improved performance is to be attributed to this improvement of the run. The Rifleman, it will be seen, is a vessel of 486 tons, and was originally of 200 horses' power; the Teazer is a vessel of 296 tons, and was originally of 100 horses' power. Both of the vessels were originally too full in the stern; the sterns of both were therefore sharpened, and, simultaneously with this alteration, the 100 horse power engines of the Teazer were put into the Rifleman, in substitution of that vessel's original engines, and new engines of 40 horses' power were put into the Teazer. Both vessels went faster than before; and the Teazer's engines, when transferred to the Rifleman, drove that vessel nearly two knots an hour faster than they had previously driven the smaller vessel, thus proving the great importance of an eligible form of hull.

It will be remarked that both the nominal and the indicated power of the several engines are given in the tables, and it is right to explain that these quantities are totally different, and indeed incomparable. The nominal power of an engine expresses popularly its size; and when a vessel is spoken of as of so many horses' power, or when engines are bought or sold for a certain sum per horse power, it is the nominal power which is always intended to be expressed. In my "Catechism of the Steam Engine," I have given rules and tables for finding the nominal power of an engine, and also for finding the dimensions of engine answerable to any prescribed nominal power. I have also explained there the means of ascertaining the actual or effective power of an engine by the aid of the indicator. It will be seen by the foregoing tables, that the ratio between the nominal and actual power of an engine is very variable, and is indeed not constant in the same engine at different times. For the nominal power remains the same, whether the engine is working effectively or otherwise; whereas the actual power is an expression of the efficiency with which the engine works. In cases where the engines have been taken out of any of the vessels mentioned in the tables, and other engines of a different power have been introduced, the circumstance will be made apparent by referring to the column of nominal power, where the nominal power of both engines will be found. In the whole, or nearly the whole, of the vessels enumerated in these tables, the screw employed is a two-bladed screw of a uniform pitch. In the Fairy a three-bladed screw has been in some cases employed, and in other cases a two-bladed screw, and screws of different kinds have also been occasionally used in some of the other vessels; but these cases are exceptional, and the two-bladed screw of a uniform pitch is the screw adopted in the navy. The slip of the screw expresses the difference between the advance actually made by the ship, and the advance which would be made if the screw worked in a solid, like a bolt working in a nut. The amount of slip varies from 45 per cent. to 0, and in some cases it is less than nothing; or, in other words, the vessel actually, advances faster than if the screw were working in a solid. An explanation of the cause of this mysterious action will be found in the body of the work. By the screw's disc is meant a disc or circle of the same diameter as that in which the points of the screw blades revolve.

The cube root of the square of the displacement of the vessel is expressed by $(\text{displacement})^{\frac{2}{3}}$, and $\frac{\text{Speed}^3 \times \text{Mid. Sec.}}{\text{Nominal Power}}$ means the speed in knots per hour cubed, multiplied by the immersed section of the vessel in square feet at the time of trial, and divided by the nominal power. Instead of the nominal power, the indicator power is employed in some of the columns, and the result is to give coefficients of greater utility; for the coefficients thus obtained indicate the quality of the vessel's shape,—the best vessels, other things being equal, having the largest coefficients. The coefficients thus derived by multiplying the speed cubed by the sectional area and dividing by the indicator power, shows that the Rattler and Reynard are among the best shapes for speed of the screw vessels in the navy, and that the Blenheim and Ajax are the worst. By a reference to Table III. it will be seen that the coefficient of the Rattler in the first experiment is 654·5, of the Reynard 624·6, of the Ajax 229·8, and of the Blenheim 154·7. The first coefficient of the Teazer was 118·9, being worse than that of the Blenheim; but when the Teazer had been made finer at the stern, the coefficient rose to 293·4,—still a bad result, but much better than before. The first coefficient of the Rifleman was 263·6; but after that vessel had been made finer in the run, the coefficient rose to 531·9. These indications do not appear to vary materially when the coefficient adopted is the speed cubed multiplied by the cube root of the square of the displacement and divided by the indicated power, as will be seen by a reference to Table III., where a column of such results is given.

FRENÇH SCREW STEAMER "PELICAN."

TABLE IV.

TABLE of Dimensions and Weights of the Screws tried in the "Pelican."

Numbers of the Screws.	Directions.	Fractions of Pitch. Intended.	Fractions of Pitch. Actual.	Pitch in Mètres. Intended.	Pitch in Mètres. Actual.	Thicknesses in Mètres. At the Root of the Blade.	Thicknesses in Mètres. At the Extremity of the Blade.	Weights in Kilogrammes.
SCREWS OF TWO BLADES. Diameter 1·680 mètres.								
10	Straight	0·450	0·455	2·361	2·335	0·070	0·018	511
11	Straight	0·300	0·288	2·361	2·368	0·070	0·018	428
12	Curved	0·300	0·300	at entrance 1·600 at exit 2·610	at entrance 1·600 at exit 2·610	0·070	0·018	425
13 bis	Straight	0·375	0·371	2·880	2·878	0·070	0·018	528
14 bis	Straight	0·300	0·294	2·880	2·908	0·070	0·018	...
17	Straight	0·450	0·450	2·880	2·886	0 070	0·018	634
18	Curved	0·450	0·450	at entrance 2·00 at exit 2·88	at entrance 2·00 at exit 2·88	0 070	0·018	570
23	Straight	0·450	0·450	3·513	3·513	0·070	0·018	680
24	Curved	0·450	0·450	at entrance 2·20 at exit 3·513	at entrance 2·20 at exit 3·513	0·070	0 018	630
SCREWS OF FOUR BLADES. Diameter 1·680 mètres.								
1	Straight	0·600	0·580	1·935	2·008	0·070	0·018	577
2	Straight	0·450	0·443	1·935	2·010	0·070	0·018	502
3	Straight	0·375	0·326	1·935	2·053	0·070	0·018	455
4	Straight	0·300	0·280	1·935	2·129	0·070	0·018	402
6	Straight	0·600	0·600	2·361	2·365	0·070	0·018	620
7	Straight	0·450	0·443	2·361	2·414	0·070	0·018	533
8	Straight	0·375	0·360	2·361	2·459	0·070	0·018	488
9	Straight	0·300	0·280	2·361	2·484	0·070	0·018	417
13	Straight	0·750	0·770	2·880	2·872	0·070	0·018	771
14	Straight	0·600	0·590	2·880	2·908	0·070	0·018	453
15	Straight	0·450	0·438	2·880	3·000	0·070	0·018	577
16	Straight	0·375	0·360	2·880	3·040	0·070	0·018	507
16 bis	Straight	0·300	0·290	2·880	3·060	0·070	0·018	473
19	Straight	0·750	0·770	3·513	3·455	0·070	0·018	931
20	Straight	0·600	0·625	3·513	3·553	0·070	0·018	793
21	Straight	0·450	0·453	3·513	3·531	0·070	0·018	637
22	Straight	0·375	0·370	3·513	3·526	0·070	0·018	562
22 bis	Straight	0·300	0 285	3·513	3·575	0·070	0·018	494
25	Straight	0·750	0·740	2·608	2·625	0·070	0·058	886
26	Straight	0·600	0·600	2·608	2·621	0·070	0·058	730
27	Straight	0·450	0·453	2·608	2·598	0·070	0·058	695
28	Straight	0·375	...	2·608	2·568	0·070	0·058	534
29	Straight	0·300	0·300	2·608	2·661	0·070	0·058	497
33	Straight	0·450	0·450	4·285	4·209	0·070	0·058	680
SCREWS OF FOUR BLADES. Diameter 1·858 mètres.								
20 increased	Straight	0·600	0·625	3·513	3·553	0·080	0·058	1080
SCREWS OF FOUR BLADES. Diameter 2·050 mètres.								
3	Straight	0·375	...	5·229	...	0·080	0·018	938
SCREWS OF FOUR BLADES. *Diameter 2·500 mètres.*								
6 bis	Straight	0·300	0·293	2·361	2·378	0·085	0 020	735
7	Straight	0·300	0·297	2·361	2·394	0·085	0·020	743
14	Straight	0·450	0·455	5·229	5·209	0·085	0·020	1516
15	Straight	0·300	0·292	5·229	5·366	0·085	0·020	1147
22	Curved	0·450	...	at entrance 4·286 at exit 6·381	at entrance 4·286 at exit 6·381	0·085	0·020	1500
SCREWS OF SIX BLADES. Diameter 1·680 mètres.								
A	Straight	0·600	...	2·880	2·876	0·070	0·078	694
32	Straight	0·600	...	2·608	2·688	0·070	0·078	637

In the foregoing tables are given the results of the experiments made with the French screw steam packet "Pelican," the more material deductions from which have been already set forth in the body of the present work. Table IV. consists of an enumeration of the diameter, pitch, fraction of pitch, number of blades, thickness of blades, and weight of each of the screws tried; and Table V. contains a *resumé* of the results of the experiments upon the simple hull cleared of the disturbance due to wind, current, or variation of speed, and reduced to a uniform speed of 9·5 knots per hour. These results have been obtained by representing, by means of curves, the law of the progression in the several quantities enumerated, as ascertained by the experiments; and by then drawing other curves, with the proper allowance for disturbing influences, the co-ordinates given in Table V. have been determined. The co-efficient of slip is a fractional part of the pitch when the pitch is considered as unity. The pitch, therefore, multiplied by the co-efficient of slip, gives a quantity which, if taken from the pitch, leaves as a result the advance made by the vessel through the water per revolution of the screw. Thus, taking the first figures which occur in Table V., we shall find that $2{\cdot}361 \times {\cdot}2873 = {\cdot}678315$; and this quantity, taken from 2·361, leaves 1·683, which is the advance made by the vessel through the water per revolution of the screw. It is obvious, moreover, that by adding the advance to the slip we get the pitch of the screw. Thus, $1{\cdot}683 + {\cdot}6783153 = 2{\cdot}631$. The difference between the co-efficient of slip and the actual slip is that the co-efficient of slip supposes the pitch to be 1, whereas the actual slip supposes the pitch to be expressed in feet, mètres, or other known measures which represent its actual amount.

TABLE V.

RESUMÉ of Results derived from Experiments upon the "Pelican."

*** The figures in this table are taken from curves of interpolation which represent the law of variation of the several elements when corrected for the influence of the wind, for variations of immersion, and for variations of speed. The whole of the figures in this table answer to a speed of 9·5 knots, and an immersion of 10·16 square mètres.

Numbers of the Screws. See Table IV.	Date of Experiment.	Diameter of Screw in Mètres.	Number of Blades.	Pitch of Screw in Mètres.	Co-efficient of Slip.	Advance of the Vessel through the Water per Turn of the Screw in Mètres.	Value of $\left(\frac{p-5}{r}\right)\frac{1}{n^2}$	Efficiency or Utilization with the Factor $\frac{n^2}{(p-5)}$
10	27th September, 1848	1·680	2	2·361	0·2873	1·683	1·234	K × 0·07627
10		1·680	2	2·335	0·2850	1·67	1·212	K × 0·07512
11	11th October, 1848	1·680	2	2·361	0·3128	1·623	1·127	K × 0·07490
11		1·680	2	2·368	0·3142	1·624	1·134	K × 0·07467
14 bis	13th July, 1848	1·680	2	2·880	0·3650	1·829	1·634	K × 0·07420
14 bis		1·680	2	2·908	0·3678	1·838	1·672	K × 0·07345
17	9th, 10th, 11th July 1848	1·680	2	2·880	0·3372	1·909	1·792	K × 0·07870
17		1·680	2	2·886	0·3375	1·912	1·795	K × 0·07695
23	29th July & 4th Aug. 1848	1·680	2	3·513	0·3882	2·149	2·680	K × 0·07400
23		1·680	2	3·513	0·3882	2·149	2·680	K × 0·07400
1	10th October, 1848	1·680	4	1·935	0·2056	1·537	1·096	K × 0·06518
1		1·680	4	2·008	0·2140	1·578	1·174	K × 0·06624
2	31st October, 1848	1·680	4	1·935	0·2200	1·581	0·987	K × 0·06883
2		1·680	4	2·010	0·2305	1·547	1·058	K × 0·06915
3	3d November, 1848	1·680	4	1·935	0·2320	1·486	0·9130	K × 0·07102
3		1·680	4	2·053	0·2467	1·547	1·025	K × 0·07132
4	29th, 30th Nov. 1848	1·680	4	1·935	0·2447	1·457	0·8399	K × 0·07304
4		1·680	4	2·128	0·2700	1·553	1·008	K × 0·07351
6	25th September, 1848	1·680	4	2·361	0·2516	1·767	1·560	K × 0·06990
6		1·680	4	2·365	0·2518	1·769	1·563	K × 0·06983
7	29th Aug. & 22d Sept. 1848	1·680	4	2·361	0·2679	1·728	1·412	K × 0·07230
7		1·680	4	2·414	0·2728	1·755	1·470	K × 0·07273
8	28th September, 1848	1·680	4	2·361	0·2796	1·710	1·315	K × 0·07400
8		1·680	4	2·459	0·2900	1·746	1·421	K × 0·07402
9	7th October, 1848	1·680	4	2·361	0·2948	1·664	1·225	K × 0·07436
9		1·680	4	2·484	0·3080	1·734	1·358	K × 0·07588
13	12th July, 1848	1·680	4	2·880	0·2870	2·053	2·372	K × 0·07205
13		1·680	4	2·872	0·2860	2·050	2·369	K × 0·07195
14	4th July, 1848	1·680	4	2·880	0·2981	2·021	2·277	K × 0·07322
14		1·680	4	2·908	0·3005	2·034	2·268	K × 0·07346
15	7th July, & 17th Oct. 1848	1·680	4	2·880	0·3194	1·972	1·030	K × 0·07492
15		1·680	4	3·000	0·3299	2·023	2·192	K × 0·07466
16	15th July, 1848	1·680	4	2·880	0·3295	1·932	1·905	K × 0·07489
16		1·680	4	3·040	0·3430	1·997	2·107	K × 0·07474
16	1st November, 1848	1·680	4	2·880	0·3295	1·932	1·905	K × 0·07489
16		1·680	4	3·040	0·3430	1·997	2·107	K × 0·07474
16 bis	22th July, 1848	1·680	4	2·880	0·3445	1·887	1·779	K × 0·07475
16 bis		1·680	4	3·060	0·3610	1·559	1·992	K × 0·07419
16 bis	17th, 18th Nov. 1848	1·680	4	2·880	0·3445	1·887	1·779	K × 0·07475
16 bis		1·680	4	3·060	0·3610	1·550	1·992	K × 0·07419
19	26th July, 1848	1·680	4	3·513	0·3360	2·333	3·455	K × 0·07348
19		1·680	4	3·455	0·3315	2·310	3·269	K × 0·07229
19	11th, 12th, 13th Dec. 6th Jan. 1848	1·680	4	3·513	0·3360	2·333	3·455	K × 0·07348
19		1·680	4	3·455	0·3315	2·310	3·269	K × 0·07229
20	7th August, 1848	1·680	4	3·513	0·3452	2·300	3·967	K × 0·07370
20		1·680	4	3·553	0·3495	2·313	3·338	K × 0·07316
21	21st October, 1848	1·680	4	3·513	0·3642	2·234	3·005	K × 0·07335
21		1·680	4	3·531	0·3663	2·238	3·028	K × 0·07312
22	29th, 30th October, 1848	1·680	4	3·513	0·3795	2·120	2·819	K × 0·06268
22		1·680	4	3·526	0·3808	2·183	2·857	K × 0·07199
22 bis	9th November, 1848	1·680	4	3·513	0·3966	2·120	2·626	K × 0·07165
22 bis		1·680	4	3·575	0·4020	2·137	2·723	K × 0·07080
25	9th October, 1848	1·680	4	2·608	0·2638	1·920	1·987	K × 0·07032
25		1·680	4	2·625	0·2653	1·929	2·011	K × 0·07051
26	20th October, 1848	1·680	4	2·608	0·2749	1·891	1·859	K × 0·07180
26		1·680	4	2·621	0·2755	1·899	1·885	K × 0·07182
27	20th, 21st November, 1848	1·680	4	2·608	0·2914	1·849	1·695	K × 0·07369
27		1·680	4	2·598	0·2905	1·843	1·680	K × 0·07367
28	8th November, 1848	1·680	4	2·608	0·3042	2·815	1·583	K × 0·07460
28		1·680	4	2·568	0·3005	1·796	1·535	K × 0·07467
29	28th, 29th November, 1848	1·680	4	2·608	0·3198	1·774	1·475	K × 0·07482
29		1·680	4	2·661	0·3252	1·796	1·535	K × 0·07457
33	3d, 4th January, 1849	1·680	4	4·285	0·4150	2·507	4·679	K × 0·06558
33		1·680	4	4·209	0·4122	2·474	4·531	K × 0·
20 incr.	4th October, 1848	1·856	4	3·513	0·3452	2·300	3·267	K × 0·07370
		1·856	4	3·553	...	...	...	K × 0·

The fraction $\left(\frac{p-5}{r}\right)\frac{1}{n^2}$ means the mean *gross* pressure in the cylinders minus 5 centimètres of mercury, or ·9666 lbs. per square inch, divided by the multiple of the gearing, and this resulting number again divided by the square of the number of revolutions of the screw per second. The whole expression represents the effective pressure necessary to be exerted in the cylinders of engines connected directly with the screw shaft to make the screw perform one revolution per second, and has, therefore, the same value as the expression P_{e^1}, which is frequently used in the body of the work. The factor $\left(\frac{n^2}{p-5}\right)$ means the square of the number of revolutions of the screw per second divided by the gross pressure of the steam in cylinders connected immediately with the screw shaft when diminished by ·9666 lbs. per square inch. In some of the columns of the tables this deduction of 5 centimètres of mercury for friction is not made, but the gross pressure is taken as expressed by p.

The velocities of the wind in mètres per second, which answer to the expressions used in the column which takes account of the state of the wind and sea are as follows:—Calm, 0; almost calm, 0; light airs, 1·5; faint or gentle breeze, 3; light breeze, 4·5; pretty strong breeze, 5·25; strong breeze, 6; pleasant gale, 7·5; brisk gale, 9.

TABLE

RESULT OF EXPERIMENTS MADE WITH THE

(A mètre is 39·37079 English inches, or 3·2808 English feet; a square

Number of the Run. A. ascending. D. descending.	Numbers of the Screws in Plate IV.	Length of each Run in Mètres.	Date of Experiment.	High Speed, Medium Speed, or Low Speed.	Mean Draught of Water in Mètres.	Difference of Draught at Bow and Stern in Mètres.	Area of Immerged Midship Section in Square Mètres.	Diameter of Screw in Mètres.	Number of Blades of Screw.	Intended Pitch of Screw in Mètres.	Actual Pitch of Screw in Mètres.	Intended Fraction of Pitch.	Actual Fraction of Pitch.	Multiple of Gearing.	Mean Pressure in the Boiler in Centimètres of Mercury.	Proportion of Stroke made without Expansion.
1	10	1016·5	27th Sept. 1848	Low	2·510	0·700	10·2575	1·680	2	2·361	2·335	0·450	0·455	5·091	8·5	90-100
2	10	1016·5	27th Sept. 1848	Low	2·5 0	0·700	10·2575	1·680	2	2·361	2·335	0·450	0·455	5·091	7·0	90-100
3	10	1016 5	27th Sept. 1848	Low	2·510	0·700	10·2575	1·680	2	2·361	2·335	0·450	0·455	5·091	10·5	90-100
4	10	1016·5	27th Sept. 1848	Low	2·510	0·700	10·2575	1·680	2	2·361	2·335	0·450	0·455	5·091	6·3	90-100
5	10	1016·5	27th Sept. 1848	Medium	2·510	0·700	10·2575	1·680	2	2·361	2·335	0·450	0·455	5·091	16·0	70-100
6	10	1016·5	27th Sept. 1848	Medium	2·510	0·700	10·2575	1·680	2	2·361	2·335	0·450	0·455	5·091	17·0	70-100
7	10	1016·5	27th Sept. 1848	Medium	2·510	0·700	10·2575	1·680	2	2·361	2·335	0·450	0·455	5·091	19·5	70-100
8	10	1016·5	27th Sept. 1848	Medium	2·510	0·700	10·2575	1·680	2	2·361	2·335	0·450	0·455	5·091	24·5	70-100
9	10	1016·5	27th Sept. 1848	High	2·510	0·700	10·2575	1·680	2	2·361	2·335	0·450	0·455	5·091	29·875	70-100
10	10	1016·5	27th Sept. 1848	High	2·510	0·700	10·2575	1·680	2	2·361	2·335	0·450	0·455	5·091	33·0	70-100
11	10	1016·5	27th Sept. 1848	High	2·510	0·700	10·2575	1·680	2	2·361	2·335	0·450	0·455	5·091	29·375	70-100
1	11	1016·5	11th Oct. 1848	High	2·480	0·770	10·1215	1·680	2	2·361	2·368	0·300	0·288	5·091	44·0	50-100
2	11	1016·5	11th Oct. 1848	High	2·480	0·770	10·1215	1·680	2	2·361	2 368	0·300	0·288	5·091	46·5	50-100
3	11	1016·5	11th Oct. 1848	High	2·480	0·770	10·1215	1·680	2	2·361	2·368	0·300	0·288	5·091	44·0	50-100
4	11	1016·5	11th Oct. 1848	High	2·480	0·770	10·1215	1·680	2	2·361	2·368	0·300	0·288	5·091	40·5	50-100
5	11	1016·5	11th Oct. 1848	Medium	2·480	0·770	10·1215	1·680	2	2·361	2·368	0·300	0·288	5·091	12·5	70-100
6	11	1016·5	11th Oct. 1848	Medium	2·480	0·770	10·1215	1·680	2	2·361	2·368	0·300	0·288	5·091	20·5	70-100
7	11	1016·5	11th Oct. 1848	Medium	2·480	0·770	10·1215	1·680	2	2·361	2·368	0·300	0 288	5·091	17·0	70-100
8	11	1016·5	11th Oct. 1848	Medium	2·480	0·770	10·1215	1·680	2	2·361	2·368	0·300	0·288	5·091	24·0	70-100
9	11	1016 5	11th Oct. 1848	Low	2·480	0·770	10·1215	1·680	2	2·361	2·368	0·300	0·288	5·091	7·5	80-100
10	11	1016·5	11th Oct. 1848	Low	2·480	0 770	10.1215	1·680	2	2·361	2·368	0·300	0·288	5·091	4·5	80-100
11	11	1016·5	11th Oct. 1848	Low	2·480	0·770	10·1215	1·680	2	2·361	2·368	0·300	0·288	5·021	6·5	80-100
1 D	12	1016·5	6th Oct. 1848	High	2·520	0·750	10·3255	1·680	2	1·600 2·610	...	0·300	...	5·091	34·0	50-100
2	12	1016·5	6th Oct. 1848	High	2·520	0·750	10·3255	1·680	2	1·600 2·610	...	0·300	...	5·091	34·0	50-100
3	12	1016·5	6th Oct. 1848	High	2·520	0·750	10·3255	1·680	2	1·600 2·610	...	0·300	...	5·091	47·0	50-100
4	12	1016·5	6th Oct. 1848	High	2·520	0·750	10·3255	1·680	2	1·600 2·610	...	0·300	...	5 091	50·0	50-100
5	12	1016·5	6th Oct. 1848	Medium	2·520	0·750	10·3255	1·680	2	1·600 2·610	...	0·300	...	5·091	13·0	70-100
6	12	1016·5	6th Oct. 1848	Medium	2·520	0·750	10·3255	1·680	2	1·600 2·610	...	0·300	...	5·091	19·0	70-100
7	12	1016·5	6th Oct. 1848	Medium	2·520	0·750	10·3255	1·680	2	1·600 2·610	...	0·300	...	5·091	24·0	70-100
8	12	1016·5	6th Oct. 1848	Medium	2·520	0·750	10·3255	1·680	2	1·600 2·610	...	0·300	...	5·091	18·0	70-100
9	12	1016·5	6th Oct. 1848	Low	2·520	0·750	10·3255	1·680	2	1·600 2·610	...	0·300	...	5·091	15 0	85-100
10	12	1016·5	6th Oct. 1848	Low	2·520	0·750.	10·3255	1·680	2	1·600 2·610	...	0·300	...	5·091	8·0	85-100
11	12	1016·5	6th Oct. 1848	Low	2·520	0·750	10·3255	1·680	2	1·600 2·610	...	0·300	...	5·091	5·0	85-100
12	12	1016·5	6th Oct. 1848	Low	2·520	0·750	10·3255	1·680	2	1·600 2·610	...	0·300	...	5·091	2·5	85-100
1 A	13 bis	1016·5	28th July, 1848	High	2·470	0·690	...	1·680	2	2·880	2·878	0·375	0·371	5·091	33·33	30-100
2	13 bis	1016·5	28th July, 1848	High	2·470	0·690	...	1·680	2	2·880	2·878	0·375	0·371	5·091	33·16	30-100
3	13 bis	1016·5	28th July, 1848	High	2·470	0·690	...	1·680	2	2·880	2·878	0·375	0·371	5·091	44·60	30-100
4	13 bis	1016·5	28th July, 1848	High	2·470	0·690	...	1·680	2	2·880	2·878	0·375	0·371	5·091	47·5	30-100
5	13 bis	1016·5	28th July, 1848	High	2·470	0·690	...	1·680	2	2·880	2·878	0·375	0·371	5·091	51·33	30-100
6	13 bis	1016·5	28th July, 1848	Medium	2·470	0·690	...	1·680	2	2·880	2·878	0·375	0 371	5·091	17·5	70-100
7	13 bis	1016·5	28th July, 1848	Medium	2·470	0·690	...	1·680	2	2·880	2·878	0·375	0·371	5·091	23·0	70-100
8	13 bis	1016·5	28th July, 1848	Medium	2·470	0·690	...	1·680	2	2·880	2·878	0·375	0·371	5 091	16·0	70-100
9	13 bis	1016·5	28th July, 1848	Medium	2·470	0·690	...	1·680	2	2·880	2·878	0·375	0·371	5·091	11·5	70-100
10	13 bis	1016·5	28th July, 1848	Medium	2·470	0·690	...	1·680	2	2·880	2·178	0·375	0·371	5·091	14·5	70-100
11	13 bis	1016·5	28th July, 1848	Low	2·470	0·690	...	1·680	2	2·880	2·878	0·375	0·371	5·091	15·5	30-100
12	13 bis	1016·5	28th July, 1848	Low	2·470	0·690	...	1·680	2	2·880	2·878	0·375	0·371	5·091	16·75	30-100
13	13 bis	1016·5	28th July, 1848	Low	2·470	0·690	...	1·680	2	2·880	2·878	0·375	0·371	5·091	12·0	30-100
14	13 bis	1016·5	28th July, 1848	Low	2·470	0·690	...	1·680	2	2·880	2·878	0 375	0·371	5·091	20·5	30-100
1 A	14 bis	1016·5	13th July, 1848	Medium	2·510	0·670	10·2575	1·680	2	2·880	2·908	0·30	0·294	5·091	10·0	30-100
2	14 bis	1016·5	13th July, 1848	Medium	2·510	0·670	10·2575	1·680	2	2·880	2·908	0·30	0·294	5·091	4·0	30-100
3	14 bis	1016·5	13th July, 1848	Medium	2·510	0·670	10·2575	1·680	2	2·880	2·908	0·30	0·294	5·091	8·0	30-100
4	14 bis	1016·5	13th July, 1848	Medium	2·510	0·670	10·2575	1·680	2	2·880	2·908	0·30	0·294	5·091	10·5	30-100
5	14 bis	1016·5	13th July, 1848	Low	2·510	0 670	10·2575	1·680	2	2·880	2·908	0·30	0·294	5·091	10·7	70-100
6	14 bis	1016·5	13th July, 1848	Low	2·510	0·670	10·2575	1·680	2	2·880	2·908	0·30	0·294	5·091	12·0	70-100
7	14 bis	1016·5	13th July, 1848	Low	2·510	0·670	10·2575	1·680	2	2·880	2·908	0·30	0·294	5·091	11·5	70-100
8	14 bis	1016·5	13th July, 1848	Low	2·510	0 670	10·2575	1·680	2	2·880	2·908	0 30	0·294	5·091	9·0	70-100
9	14 bis	1016·5	13th July, 1848	Low	2·510	0·670	10·2575	1·680	2	2·880	2·908	0·30	0·294	5 091	8·5	70-100
10	14 bis	1016·5	13th July, 1848	Good	2·510	0·670	10·2575	1·680	2	2·880	2·908	0·30	0·294	5·091	32·3	70-100
11	14 bis	1016·5	13th July, 1848	Good	2·510	0·670	10·2575	1·680	2	2·880	2·908	0·30	0·294	5·091	43·3	70-100
12	14 bis	1016·5	13th July, 1848	Good	2·510	0·670	10·2575	1·680	2	2·880	2·908	0·30	0·294	5·091	39·6	70-100
13	14 bis	1016·5	13th July, 1848	High	2·510	0·670	10·2575	1·680	2	2·880	2·908	0·30	0·294	5·091	33·16	70-100
14	14 bis	1016·5	13th July, 1848	High	2·510	0·670	10·2575	1·680	2	2·880	2·908	0·30	0·294	5·091	28·33	70-100
15	14 bis	1016·5	13th July, 1848	High	2·510	0·670	10·2575	1·680	2	2·880	2·908	0·30	0·294	5·091	25·0	70-100
16	14 bis	1016·5	13th July, 1848	High	2·510	0·670	10·2575	1·680	2	2·880	2·908	0·30	0·294	5·091	37·16	70-100

curved directrix, or increasing pitch.

VI.

FRENCH SCREW STEAM PACKET "PELICAN."

mètre is 10·764 square feet; and a centimètre is 0·39371 English inches.)

Number of Turns of the Screw per Second.	Absolute Speed of the Vessel in Metres per Second.	Advance per Turn of the Screw in Metres.	Mean Co-efficient of Slip with Intended Pitch.	Mean Co-efficient of Slip with Actual Pitch.	Mean Pressure in the Cylinders in Centimètres of Mercury.	Value of $\left(\frac{R}{\frac{r}{n^2}}\right)$	Value of $\left(\frac{p-b}{\frac{r}{n^2}}\right)$	Efficiency or Utilization with p.	Efficiency or Utilization with $(p-b)$.	Mean Speed of the Vessel in Knots.	Speed shown by the Log in Knots.	State of the Wind and Sea, and Remarks.	Number of the Run. A. ascending. D. descending.
2·095	3·883	...	0·2585	0·2505	30·59	1·3614	1·1378	K × 0·08001	K × 0·09575	7·18	...	Calm.	1
2·129	3·895	1·753	0·2585	0·2505	33·76	1·4582	1·2418	K × 0·07316	K × 0·08585	7·18	...	Calm.	2
2·133	3·708	1·748	0·2585	0·2505	33·15	1·4337	1·2169	K × 0·07478	K × 0·08805	7·18	...	Calm.	3
2·094	3·536	...	0·2585	0·2505	32·49	1·4474	1·2247	K × 0·07431	K × 0·08784	7·18	...	Calm.	4
2·422	4·439	...	0·2715	0·2595	41·77	1·3800	1.2142	K × 0·07389	K × 0·08395	8·17	...	Calm.	5
2·398	3·744	1·741	0·2715	0·2595	40·9	1·3970	1·2262	K × 0·07448	K × 0·08485	8·17	...	Calm.	6
2·425	4·684	1·717	0·2715	0·2595	41·875	1·3696	1·2030	K × 0·07326	K × 0·08345	8·17	...	Calm.	7
2·482	3·598	...	0·2715	0·2595	42·425	1·3696	1·2083	K × 0·07381	K × 0·08365	9·17	...	Calm.	8
2·825	5·647	...	0·2891	0·2813	54·09	1·3322	1·2088	K × 0·07188	K × 0·07920	9·27	...	Light airs from S.W.	9
2·873	3·793	1·678	0·2891	0·2813	55·07	1·3381	1·2180	K × 0·07052	K × 0·07748	9·27	...	Light airs from S.W.	10
2·834	5·910	...	0·2891	0·2813	55·66	1·3381	1·2180	K × 0·07095	K × 0·07796	9·27	...	Light airs from S.W.	11
2·964	5·859	1·596	0·3215	0·3239	57·60	1··827	1·1715	K × 0·06496	K × 0·07113	9·5	9·3	Calm.	1
2·169	3·544	1·617	0·3215	0·3239	79·0	1·2329	1·1335	K × 0·06759	K × 0·07371	9·5	9·6	Calm.	2
3·032	6·217	...	0·3215	0·3239	59·437	1 2561	1·1492	K × 0·06635	K × 0·07249	9·5	9·0	Calm.	3
2·947	3·523	...	0·3215	0·3239	56·1	1 2855	1·1710	K × 0·06481	K × 0·07114	9·5	9·4	Calm.	4
2·336	5·160	...	0·3215	0·2988	35·85	1·2761	1·0988	K × 0·07060	K × 0·08205	7·79	7·7	Calm.	5
2·432	2·785	1·657	0·3215	0·2988	38·462	1·3023	1·1335	K × 0·07098	K × 0·08158	7·79	7·8	Calm.	6
2·372	5·136	1·660	0·3215	0·2988	37·362	1·3060	1·1368	K × 0·06881	K × 0·07942	7·79	7·6•	Calm.	7
2·530	3·062	...	0·3215	0·2988	40·762	1·2368	1·0984	K × 0·07265	K × 0·08160	7·79	8·0	Calm.	8
2·067	4·002	...	0·2915	0·2935	29·372	1·3361	1·1091	K × 0·07122	K × 0·08582	6·5	6·0	Light airs from S.W.	9
1·989	2·855	1·673	0·2915	0·2935	26·65	1·3244	1·0767	K × 0·06956	K × 0·08560	6·5	6·5	Light airs from S.W.	10
1·979	3·710	...	0·2915	0·2935	27·725	1·3580	1·1113	K × 0·06783	K × 0·08291	6·5	6·3	Light airs from S.W.	11
...	...	...	0·3166	...	56·79	1·2544	1·1536	...	...	9·8	9·0	{Increasing pitch, 1·600 at entrance, 2·610 at exit.}	1 D
2·980	4·235	1·613	0·3166	...	54·625	1·2608	1·1464	K × 0·06797	K × 0·07478	9·8	9·2	... ...	2
3·155	5·727	...	0·3166	...	61·682	1·2108	1·1191	K × 0·07641	K × 0·08315	9·8	...	Faint breeze from E.	3
3·247	4·538	...	0·3166	...	64·75	1·2083	1·1150	K × 0·07078	K × 0·07670	9·8	10·3	Light airs from E.	4
2·469	4·706	...	0·3036	...	38·525	1·2487	1·0865	K × 0·07225	K × 0·08305	8·12	8·0	Light airs from E.	5
2·573	3·592	1·650	0·3036	...	42·575	1·2631	1·1159	K × 0·07030	K × 0·07965	8·12	8·0	Light airs from E.	6
2·624	5·007	1·638	0·3036	...	41·912	1·2538	1·0562	K × 0·07359	K × 0·08355	8·12	8·2	Light airs from E.	7
2·508	3·316	...	0·3036	...	39·8	1·2180	1·0616	K × 0·07310	K × 0·08385	8·12	8·3	Light airs from E.	8
2·288	4·018	...	0·2922	...	34·04	1·2725	1·0857	K × 0·07340	K × 0·08605	7·17	7·0	Light airs from E.	9
2·234	3·554	1·670	0·2922	...	31·06	1·2202	1·0234	K × 0·07671	K × 0·09142	7·17	...	Almost calm.	10
2·148	3·737	1·673	0·2922	...	29·975	1·2815	1·0691	K × 0·07320	K × 0·08778	7·17	6·8	Almost calm.	11
2·092	3·400	...	0·2922	...	39·05	1·3414	1·1172	K × 0·07011	K × 0·08412	7·17	6·8	Almost calm.	12
2·638	6·124	...	0·3617	0·3593	65·937	1·8636	1·7224	K × 0·06778	K × 0·07334	7·761	10·5	Calm.	1 A
2·636	3·850	1·865	0·3617	0·3593	64·487	1·8045	1·6656	K × 0·06841	K × 0·07413	7·761	10·0	Calm.	2
2·712	6·033	1·836	0·3617	0·3593	67·787	1·7591	1·6250	K × 0·06929	K × 0·07498	7·761	10·5	Calm.	3
2·818	4·107	1·820	0·3617	0·3593	72·10	8·7657	1·6810	K × 0·06623	K × 0·07117	7·761	10·0	Light airs from W.	4
2·942	6·124	...	0·3617	0·3593	69·837	1·7489	1·6240	K × 0·06810	K × 0·07336	7·761	10·3	Light airs from W.	5
2·107	3·071	...	0·3382	0·3356	41·837	1·8535	1·6337	K × 0·07449	K × 0·08625	7·70	7·5	Faint breeze from W.	6
2·188	5·147	1·913	0·3382	0·3356	43·837	1·8068	1·6011	K × 0·07646	K × 0·08625	7·70	8·8	Faint breeze from W.	7
2·038	2 938	1·900	0·3382	0·3356	39 92	1·8933	1·6565	K × 0·07296	K × 0 08335	7·70	7·8	Faint breeze from W.	8
2·024	4·706	1·915	0 3382	0·3356	37·3	1·8225	1·5789	K × 0·07578	K × 0·08754	7·70	8·0	Faint breeze from W.	9
2·033	3·137	...	0·3382	0·3356	39·1	1·8225	1·6307	K × 0·07395	K × 0·08475	7·70	7·0	Faint breeze from W.	10
1·565	3·505	...	1·3217	1 3200	26·6	2·1332	1·7323	K × 0·06899	K × 0·08497	5·75	5·6	Faint breeze from W.	11
1·490	2·613	1·996	1·3217	1·3200	23·05	2·0376	1·8056	K × 0·07328	K × 0·09365	5·75	5·4	Faint breeze from W.	12
1·505	3·142	1·940	1·3217	1·3200	23·137	2·0669	1·6221	K × 0·07223	K × 0·09207	5·75	5·3	Faint breeze from W.	13
1·544	2·832	...	1·3217	1·3200	25·337	2·0938	1·6281	K × 0·07130	K × 0·08754	5·75	4·8	Faint breeze from W.	14
1·877	3·710	...	0·3621	0·3683	{39·7 / 37·4}	2·0874	1·8083	K × 0·059252	K × 0·068305	6·73	6·8	Pleasant breeze, variable, N.E.	1 A
1·859	3·680	1·824	0·3621	0·3683	{34·6 / 32·6}	1·8681	1·5816	K × 0·066205	K × 0·078199	6·73	7·1	Pleasant breeze, variable, N.E.	2
1·874	3·751	1·850	0·3621	0·3683	{38·8 / 36·6}	2·1602	1·8651	K × 0·057253	K × 0·066312	6·73	6·5	Pleasant breeze, variable, N.E.	3
1·981	3·487	...	0·3621	0·3683	{39·7 / 37·2}	1·8496	1·6609	K × 0·066270	K × 0·077253	6·73	7·8	Pleasant breeze, variable, N.E.	4
1·581	2·847	...	0·3624	0·3687	...	...	...	...	...	5·77	5·6	The breeze slackens.	5
1·686	3·185	1·832	0·3624	0·3687	...	...	...	...	...	5·77	7·0	The breeze slackens.	6
1·573	2·675	1·836	0·3624	0·3687	...	...	...	...	...	5·77	5·5	The breeze slackens.	7
1·664	3·417	1·840	0·3624	0·3687	...	...	...	...	...	5·77	6·6	The breeze slackens.	8
1·506	2·282	...	0·3624	0·3687	...	...	...	...	...	5·77	4·6	The breeze slackens.	9
2·345	5·743	...	0·3682	0·3741	{51·3 / 49·3}	1·7632	1·5844	K × 0·068216	K × 0·075914	8·43	8·6	Light breeze from N.E.	10
2·371	2·843	1·820	0·3682	0·3741	{56·5 / 54·3}	1·8896	1·7156	K × 0·063651	K × 0·070166	8·43	8·2	Light breeze from N.E.	11
2·442	5·910	...	0·3682	0·3741	{55·9 / 53·7}	1·7688	1·6041	K × 0·067998	K × 0·074979	8·43	9·0	Pleasant breeze from N.E.	12
2·662	3·440	...	0·3705	0·3762	{61·1 / 64·2}	1·7541	1·6174	K × 0·067331	K × 0·073025	9·13	11·0	Light breeze from N.E.	13
2·594	6·051	1·809	0·3705	0·3762	{62·9 / 61·1}	1·7885	1·6421	K × 0·066038	K × 0·071923	9·13	10·0	Light breeze from N.E.	14
2·537	2·537	1·819	0·3705	0·3762	{71·4 / 69·2}	2·1118	1·9592	K × 0·056960	K × 0·061278	9·13	8·9	Light breeze from N.E.	15
2·688	2·688	...	0·3705	0·3762	{67·3 / 65·3}	1·7600	1·6402	K × 0·067401	K × 0 073375	9·13	9·8	Light breeze from N.E.	16

RESULT OF EXPERIMENTS MADE WITH THE FRENCH

(A mètre is 39·37079 English inches, or 3·2808 English feet; a square

Number of the Run. A. ascending. D. descending	Numbers of the Screw. See Table IV.	Length of each Run in Mètres.	Date of Experiment.	High Speed, Medium Speed, or Low Speed.	Mean Draught of Water in Mètres.	Difference of Draught at Bow and Stern in Mètres.	Area of Immerged Midship Section in Square Mètres.	Diameter of Screw in Mètres.	Number of Blades of Screw.	Intended Pitch of Screw in Mètres.	Actual Pitch of Screw in Mètres.	Intended Fraction of Pitch.	Actual Fraction of Pitch.	Multiple of Gearing.	Mean Pressure in the Boiler in Centimètres of Mercury.	Proportion of Stroke made without Expansion.
1 A	17	1016·5	9th July, 1848	Medium	2·490	0·62	10·1555	1·680	2	2·880	2·886	0·450	0·450	5·091	15·0	70-100
2	17	1016·5	9th July, 1848	Medium	2·490	0·62	10·1555	1·680	2	2·880	2·886	0·450	0·450	5·091	16·0	70-100
3	17	1016·5	9th July, 1848	Medium	2·490	0·62	10·1555	1·680	2	2·880	2 886	0·450	0·450	5·091	15·0	70-100
4	17	1016·5	9th July, 1848	Medium	2·490	0·62	10·1555	1·680	2	2·880	2·886	0·450	0·450	5·091	12·5	70-100
5	17	1016·5	9th July, 1848	Medium	2·490	0·62	10·1555	1·680	2	2·880	2·886	0·450	0·450	5·091	16·0	70-100
6	17	1016·5	9th July, 1848	Low	2·490	0 62	10·1555	1·680	2	2·880	2·886	0·450	0·450	5·091	19·0	70-100
7	17	1016·5	9th July, 1848	Low	2·490	0·62	10·1555	1·680	2	2·880	2·886	0·450	0·450	5·091	19·75	70-100
8	17	1016·5	9th July, 1848	Low	2·490	0·62	10·1555	1·680	2	2·880	2·886	0·450	0·450	5·091	11·5	70-100
1	17	1016·5	10th July, 1848	Medium	2·510	0·70	10·2235	1·680	2	2·880	2 886	0·450	0·450	5·091	10·5	70-100
2	17	1016·5	10th July, 1848	Medium	2·510	0·70	10·2235	1·680	2	2·880	2·886	0·450	0·450	5·091	9·5	70-100
3	17	1016·5	10th July, 1848	Medium	2·510	0·70	10·2235	1·680	2	2·880	2·886	0·450	0·450	5·091	12 2	70-100
4	17	1016·5	10th July, 1848	Medium	2·510	0·70	10·2235	1·680	2	2·880	2·886	0·450	0·450	5·091	12·5	70-100
5	17	1016·5	10th July, 1848	Medium	2·510	0·70	10·2235	1·680	2	2·880	2·886	0·450	0·450	5·091	14·0	70-100
1	17	1016·5	11th July, 1848	Low	2·500	0·65	10·1897	1·680	2	2·880	2·886	0·450	0·450	5·091	16·0	70-100
2	17	1016·5	11th July, 1848	Low	2·500	0·65	10·1897	1·680	2	2·880	2·886	0·450	0·450	5·091	15·5	70-100
3	17	1016·5	11th July, 1848	Low	2·500	0·65	10·1897	1·680	2	2·880	2·886	0·450	0·450	5·091	20·0	70-100
4	17	1016·5	11th July, 1848	High	2·500	0·65	10·1897	1·680	2	2·880	2·886	0·450	0·450	5·091	41·16	50-100
5	17	1016·5	11th July, 1848	High	2·500	0·65	10·1897	1·680	2	2·880	2·886	0·450	0·450	5·091	35·2	50-100
6	17	1016·5	11th July, 1848	High	2·500	0·65	10 1897	1·680	2	2·880	2·886	0·450	0·450	5·091	43·5	50-100
7	17	1016·5	11th July, 1848	High	2·500	0·65	10·1897	1·680	2	2·880	2·886	0·450	0·450	5·091	44·3	50-100
1	18	1016·5	14th July, 1848	Medium	2·500	0·700	10·1897	1·680	2	curved directrix, or increasing pitch. 2·00 / 3·88	...	0·450	0·450	5·091	6·0	70-100
2	18	1016·5	14th July, 1848	Medium	2·500	0·700	10·1897	1·680	2	2·00 / 3·88	...	0·450	0·450	5·091	8·0	70-100
3	18	1016·5	14th July, 1848	Medium	2·500	0·700	10·1897	1·680	2	2·00 / 3·88	...	0·450	0·450	5·091	7·0	70-100
4	18	1016·5	14th July, 1848	Medium	2·500	0·700	10 1897	1·680	2	2·00 / 3·88	...	0·450	0·450	5·091	14·0	70-100
5	18	1016·5	14th July, 1848	Medium	2·500	0·700	10·1897	1·680	2	2·00 / 3·88	...	0·450	0·450	5·091	18·5	70-100
6	18	1016·5	14th July, 1848	Medium	2·500	0·700	10 1897	1·680	2	2·00 / 3·88	...	0·450	0·450	5·091	18·5	70-100
7	18	1016·5	14th July, 1848	Low	2·500	0·700	10·1897	1·680	2	2·00 / 3·88	...	0.450	0·450	5·091	14 0	70-100
8	18	1016·5	14th July, 1848	Low	2·500	0·700	10·1897	1·680	2	2·00 / 3·88	...	0·450	0·450	5·091	16·5	70-100
9	18	1016·5	14th July, 1848	Low	2·500	0·700	10·1897	1·680	2	2·00 / 3·88	...	0·450	0·450	5·091	13·5	70-100
10	18	1016·5	14th July, 1848	Low	2·500	0·700	10·1897	1·680	2	2·00 / 3·88	...	0·450	0·450	5·091	18·0	70-100
11	18	1016·5	14th July, 1848	High	2·500	0·700	10·1897	1·680	2	2·00 / 3·88	...	0·450	0·450	5·091	43·5	50-100
12	18	1016·5	14th July, 1848	High	2·500	0·700	10·1897	1·680	2	2·00 / 3·88	...	0·450	0·450	5·091	54·0	50-100
13	18	1016·5	14th July, 1848	High	2·500	0·700	10·1897	1·680	2	2·00 / 3·88	...	0·450	0·450	5·091	48·16	50-100
14	18	1016·5	14th July, 1848	High	2·500	0·700	10·1897	1·680	2	2·00 / 3·88	...	0·450	0·450	5·091	53·5	50-100
1	23	1016·5	29th July, 1848	High	2·500	0·76	10·1897	1·680	2	3·513	...	0·450	0·450	5·091	19·5	30-100
2	23	1016·5	29th July, 1848	High	2·500	0·76	10·1897	1·680	2	3·513	...	0·450	0·450	5·091	27·5	30-100
3	23	1016·5	29th July, 1848	High	2·500	0·76	10·1897	1·680	2	3·513	...	0·450	0·450	5·091	33·16	30-100
4	23	1016·5	29th July, 1848	High	2·500	0·76	10·1897	1·680	2	3·513	...	0·450	0·450	5·091	44·16	30-100
5	23	1016·5	29th July, 1848	Medium	2·500	0·76	10·1897	1·680	2	3·513	...	0·450	0·450	5·091	35·5	70-100
6	23	1016·5	29th July, 1848	Medium	2·500	0·76	10·1897	1·680	2	3·513	...	0·450	0·450	5·091	32·0	70-100
7	23	1016·5	29th July, 1848	Medium	2·500	0·76	10·1897	1·680	2	3·513	...	0·450	0·450	5·091	23·5	70-100
8	23	1016·5	29th July, 1848	Medium	2·500	0·76	10·1897	1·680	2	3·513	...	0·450	0·450	5·091	24·25	70-100
9	23	1016·5	29th July, 1848	Low	2·500	0·76	10·1897	1·680	2	3·513	...	0·450	0·450	5·091	19·5	70-100
10	23	1016·5	29th July, 1848	Low	2·500	0·76	10·1897	1·680	2	3·513	...	0·450	0·450	5·091	18·5	70-100
11	23	1016·5	29th July, 1848	Low	2·500	0·76	10·1897	1·680	2	3·513	...	0·450	0·450	5·091	18·0	70-100
12	23	1016·5	29th July, 1848	Low	2·500	0·76	10·1897	1·680	2	3·513	...	0·450	0·450	5·091	18·0	70-100
1	23	1016·5	4th Aug. 1848	High	2·510	0·72	10·2575	1·680	2	3·513	...	0·450	0·450	5·091	58·5	30-100
2	23	1016·5	4th Aug. 1848	High	2·510	0·72	10·2575	1·680	2	3·513	...	0·450	0·450	5·091	42·0	30-100
3	23	1016·5	4th Aug. 1848	High	2·510	0·72	10·2575	1·680	2	3·513	...	0·450	0·450	5·091	47·0	30-100
4	23	1016 5	4th Aug. 1848	High	2·510	0·72	10·2575	1·680	2	3·513	...	0·450	0·450	5·091	51·0	30-100
5	23	1016·5	4th Aug. 1848	Medium	2·510	0·72	10·2575	1·680	2	3·513	...	0·450	0·450	5·091	33·1	70-100
6	23	1016·5	4th Aug. 1848	Medium	2·510	0·72	10·2575	1·680	2	3·513	...	0·450	0·450	5·091	...	70-100
7	23	1016·5	4th Aug. 1848	Low	2·510	0·72	10·2575	1·680	2	3·513	...	0·450	0·450	5·091	31·5	85-100
8	23	1016·5	4th Aug. 1848	Low	2·510	0·72	10·2575	1·680	2	3·513	...	0·450	0·450	5·091	23·0	85-100
9	23	1016·5	4th Aug. 1848	Low	2·510	0·72	10·2575	1·680	2	3·513	...	0·450	0·450	5·091	20·9	85-100
1	24	1016·5	8th Aug. 1848	Medium	2·490	0·700	10·1555	1·680	2	curved directrix, or increasing pitch. 2 20 / 3·513	...	0·450	0·450	4·0	23·0	70-100
2	24	1016·5	8th Aug. 1848	Medium	2·490	0·700	10·1555	1·680	2	2·20 / 3·513	...	0·450	0·450	4·0	28·0	70-100
3	24	1016·5	8th Aug. 1848	Medium	2·490	0·700	10·1555	1·680	2	2·20 / 3·513	...	0 450	0·450	4·0	18·0	70-100
4	24	1016·5	8th Aug. 1848	Medium	2·490	0.700	10·1555	1·680	2	2·20 / 3·513	...	0.450	0·459	4·0	19·0	70-100
5	24	1016·5	8th Aug. 1848	Low	2·490	0·700	10·1555	1·680	2	2·20 / 3·513	...	0·450	0·450	4·0	16·0	90-100
6	24	1016·5	8th Aug. 1848	Low	2·490	0·700	10·1555	1·680	2	2·20 / 3·513	...	0·450	0·450	4·0	8·5	90-100
7	24	1016·5	8th Aug. 1848	Low	2·490	0·700	10·1555	1·680	2	2·20 / 3·513	...	0·450	0·450	4·0	7·0	90-100
8	24	1016·5	8th Aug. 1848	Low	2·490	0·700	10·1555	1·680	2	2·20 / 3·513	...	0·450	0·450	4·0	8·0	90-100

SCREW STEAM PACKET "PELICAN"—*continued.*

mètre is 10·764 square feet; and a centimètre is 0·39371 English inches.)

Number of Turns of the Screw per Second.	Absolute Speed of the Vessel in Mètres per Second.	Advance per Turn of the Screw in Mètres.	Mean Coefficient of Slip with Intended Pitch.	Mean Coefficient of Slip with Actual Pitch.	Mean Pressure in the Cylinders in Centimètres of Mercury.	Value of $\left(\frac{p}{r}\right)\frac{}{n^2}$	Value of $\left(\frac{p-5}{r}\right)\frac{}{n^2}$	Efficiency or Utilization with p.	Efficiency or Utilization with $(p-5)$.	Mean Speed of the Vessel in Knots.	Speed shown by the Log in Knots.	State of the Wind and Sea, and Remarks.	Number of the Run. A. ascending. D. descending.
1·885	4·326	...	0·3315	0·3326	41·9 40·0	2·2044	1·9289	K × 0·064208	K × 0·073391	6·19	7·0	Light breeze from W.	1 A
1·864	2·990	1·923	0·3315	0·3326	45·4 43·2	2·4352	2·1533	K × 0·058132	K × 0·065741	6·19	6·4	Light breeze from W.	2
1·938	4·253	1·922	0·3315	0·3326	43·2 41·0	2·1145	1·8567	K × 0·066323	K × 0·075534	6·19	6·0	Pleasant breeze from W.	3
1·802	2·998	1·928	0·3315	0·3326	42·15 40·0	2·4894	2·1782	K × 0·056865	K × 0·064989	6·19	5·8	Pleasant breeze from W.	4
1·927	4·155	...	0·3315	0·3326	43·15 41·0	2·1747	1·9095	K × 0·065096	K × 0·074137	6·19	7·2	Pleasant breeze from W.	5
1·239	2·070	...	0·3708	0·3721	...	...	...	...	...	4·27	3·8	Pleasant breeze from S.W.	6
1·142	2·414	1·812	0·3708	0·3721	...	...	...	...	...	4·27	4·5	Pleasant breeze from S.W.	7
1·273	2·158	...	0·3708	0·3721	...	...	...	...	...	4·27	3·8	Pleasant breeze from S.W.	8
1·609	3·197	...	0·3415	0·3415	...	...	...	...	...	5·51	6·5	Light breeze, variable, N. W.	1
1·420	4·498	1·890	0·3415	0·3415	...	...	...	...	...	5·51	...	Light breeze, variable, N. W.	2
1·497	3·830	1·887	0·3415	0·3415	...	...	...	...	...	5·51	5·8	Strong breeze from N.W.	3
1·370	2·348	1·925	0·3415	0·3415	...	...	...	...	...	5·51	5·1	Strong breeze from N.W.	4
1·401	3·147	...	0·3415	0·3415	...	...	...	...	...	5·51	5·2	Strong breeze from N.W.	5
1·254	2·455	...	0·368	0·3690	...	...	...	...	...	4·29	5·0	Pleasant breeze from N.E.	1
1·112	1·689	1·821	0·368	0·3690	...	...	...	...	...	4·29	3·0	Pleasant breeze from N.E.	2
1·979	2·300	...	0·368	0·3690	...	...	...	...	...	4·29	4·0	Pleasant breeze from N.E.	3
2·505	4·082	...	0·3545	0·3558	68·1 66·0	2·0692	1·9124	K × 0·062927	K × 0·068085	9·125	9·0	Strong breeze from N.E.	4
2·478	5·370	1·875	0·3545	0·3558	...	...	...	...	...	9·125	9·2	Strong breeze from N.E.	5
2·545	3·910	1·844	0·3545	0·3558	...	...	...	...	...	9·125	9·5	Strong breeze from N.E.	6
2·601	5·555	...	0·3545	0·3558	...	...	...	...	...	9·125	9·2	Strong breeze from N.E.	7
1·836	4·149	...	0·3333	...	7·0	...	...	...	...	7·32	7·0	Light breeze from E.N.E. fine weather, smooth sea	1
1·876	2·938	1·908	0·3333	...	...	...	...	...	...	7·32	7·3	Ditto.	2
1·842	4·149	1·918	0·3333	...	...	...	...	...	...	7·32	6·6	Ditto.	3
2·072	3·411	1·925	0·3333	...	...	...	...	...	...	7·32	7·15	Ditto.	4
2·064	4·528	1·925	0·3333	...	...	...	...	...	...	7·32	8·0	Ditto.	5
2·103	3·505	...	0·3333	...	...	...	...	...	...	7·32	8·1	Ditto.	6
1·295	3·007	...	0·3301	...	...	...	...	...	...	5·11	5·3	Gentle breeze from E.N.E.	7
1·354	2·409	1·939	0·3301	...	...	...	...	...	...	5·11	5·0	Gentle breeze from E.N.E.	8
1·399	2·668	1·919	0·3301	...	...	...	...	...	...	5·11	5·2	Gentle breeze from E.N.E.	9
1·403	2·808	...	0·3301	...	...	...	...	...	...	5·11	5·7	Gentle breeze from E.N.E.	10
2·629	4·149	...	0·3509	...	68·5 65·5	1·8620	1·7198	K × 0·069604	K × 0·074344	9·98	10·5	Gentle breeze from E.N.E.	11
2·801	6·179	1·874	0·3509	...	76·7 73·3	1·8353	1·7101	K × 0·070616	K × 0·075437	9·98	10·5	Gentle breeze from E.N.E.	12
2·683	3·932	1·865	0·3509	...	73·8 70·8	1·9507	1·7944	K × 0·067125	K × 0·072226	9·98	9·8	Gentle breeze from E.N.E.	13
2·908	6·579	...	0·3509	...	...	...	...	...	...	9·98	10·4	Gentle breeze from E.N.E.	14
1·773	6·015	...	0·4005	...	67·06	2·5712	2·6058	K × 0·06663	K × 0·07200	8·83	9·3	Light breeze from W.	1
2·116	2·999	2·094	0·4005	...	65·45	2·8593	2·6412	K × 0·06561	K × 0·07103	8·83	3·8	Light breeze from W.	2
2·193	6·015	2·117	0·4005	...	68·96	2·8133	2·6691	K × 0·06669	K × 0·07190	8·83	9·0	Light breeze from W.	3
2·275	3·567	...	0·4005	...	67·18	2·8892	2·7013	K × 0·06493	K × 0·06943	8·83	9·2	Light breeze from W.	4
1·923	5·407	...	0·3875	...	55·46	2·9127	2·6489	K × 0·06697	K × 0·07360	7·61	8·5	Light breeze from W.	5
1·834	2·689	2·148	0·3875	...	52·32	2·8877	2·6108	K × 0·06779	K × 0·07494	7·61	7·8	Light breeze from W.	6
1·790	5·07	2·156	0·3875	...	...	...	...	...	...	...	7·8	Light breeze from W.	7
1·757	2·033	...	0·3875	...	...	...	...	...	...	...	7·2	Light breeze from W.	8
1·358	3·676	...	0·3715	...	33·69	3·4392	2·9274	K × 0·06208	K × 0·07290	5·82	6·0	Light breeze from W.	9
1·348	2·364	2·211	0·3715	...	30·50	3·2971	2·7531	K × 0·06479	K × 0·07749	5·82	5·2	Light breeze from W.	10
1·369	2·586	2·214	0·3715	...	31·20	3·2713	2·7475	K × 0·06521	K × 0·07765	5·82	5·8	Light breeze from W.	11
1·309	2·409	...	0·3715	...	21·42	3·5086	2·9959	K × 0·06111	K × 0·07247	5·82	5·0	Light breeze from W.	12
2·406	5·979	...	0·3955	...	66·075	2·9503	2·7266	K × 0·06432	K × 0·06958	8·66	10·0	Light breeze from S. W.	1
2·007	3·388	2·119	0·3955	...	49·475	3·0815	2·7709	K × 0·06223	K × 0·06928	8·66	8·3	Light breeze from S. W.	2
2·067	5·226	2·127	0·3955	...	52·375	3·0475	2·7560	K × 0·06298	K × 0·06963	8·66	9·2	Light breeze from S. W.	3
2·166	3·829	...	0·3955	...	58·475	3·1155	2·9077	K × 0·06126	K × 0·06698	8·66	8·8	Light breeze from S. W.	4
1·699	4·400	...	0·385	...	36·025	3·1189	2·6862	K × 0·06471	K × 0·07514	7·08	...	Light breeze from S. W.	5
1·671	2·884	2·163	0·385	...	35·45	3·3137	2·8665	K × 0·06091	K × 0·07043	7·08	6·4	Light breeze from S. W.	6
1·588	3·434	...	0·381	...	33·85	3·3733	2·8772	K × 0·06233	K × 0·07308	6·13	6·0	Faint breeze from S. W.	7
1·458	3·016	2·174	0·381	...	26·525	3·1509	2·5545	K × 0·06673	K × 0·08225	6·13	6·8	Faint breeze from S. W.	8
1·296	3·071	...	0·381	...	23·65	3·5123	2·7679	K × 0·05987	K × 0·07596	6·13	5·4	Faint breeze from S. W.	9
1·827	4·899	...	0·3834	...	38·662	2·9221	2·5430	K × 0·06745	K × 0·07746	7·64	7·3	Calm.	1
1·861	3·012	2·150	0·3834	...	40·25	2·9175	2·5557	K × 0·06737	K × 0·07689	7·64	7·4	Calm.	2
1·783	4·840	2·180	0·3834	...	36·475	2·8699	2·4758	K × 0·07164	K × 0·08302	7·64	7·8	Calm.	3
1·768	2·999	...	0·3834	...	38·132	2·9404	2·5533	K × 0·06993	K × 0·08048	7·64	7·4	Calm.	4
1·491	3·202	...	0·4039	...	26·037	3·0226	2·4414	K × 0·06124	K × 0·07582	4·31	7·0	Light breeze from W.	5
1·284	2·755	2·122	0·4039	...	23·3	3·5289	2·7709	K × 0·05306	K × 0·06756	4·31	5·0	Pleasant breeze from W.	6
1·318	2 696	2·065	0·4039	...	21·687	3·1233	2·4039	K × 0·06095	K × 0·07803	4·31	6·3	Pleasant breeze from W.	7
1·190	2·613	...	0·4039	...	21·85	3·8033	2·9323	K × 0·05068	K × 0·06490	4·31	4·3	Stormy breeze.	8

RESULT OF EXPERIMENTS MADE WITH THE FRENCH

(A mètre is 39·37079 English inches, or 3·2808 English feet; a square

Number of the Run. A. ascending. D. descending.	Numbers of the Series as in Table IV.	Length of each Run in Mètres.	Date of Experiment.	High Speed, Medium Speed, or Low Speed.	Mean Draught of Water in Mètres.	Difference of Draught at Bow and Stern in Mètres.	Area of Immerged Midship Section in Square Mètres.	Diameter of Screw in Mètres.	Number of Blades of Screw.	Intended Pitch of Screw in Mètres.	Actual Pitch of Screw in Mètres.	Intended Fraction of Pitch.	Actual Fraction of Pitch.	Multiple of Gearing.	Mean Pressure in the Boiler in Centimètres of Mercury.	Proportion of Stroke made without Expansion.
1 A	1	1016·5	10th Oct. 1848	High	2·505	0·710	10·223	1·680	4	1·935	2·008	0·600	0·580	5·091	27·0	3-10
2	1	1016·5	10th Oct. 1848	High	2·505	0·710	10·223	1·680	4	1·935	2·008	0·600	0·580	5·091	39·5	3-10
3	1	1016·5	10th Oct. 1848	High	2·505	0·710	10·223	1·680	4	1·935	2·008	0·600	0·580	5·091	39·5	3-10
4	1	1016·5	10th Oct. 1848	High	2·505	0·710	10·223	1·680	4	1·935	2·008	0·600	0·580	5·091	38·5	3-10
5	1	1016·5	10th Oct. 1848	Medium	2·505	0·710	10·223	1·680	4	1·935	2·008	0·600	0·580	5·091	19·5	7-10
6	1	1016·5	10th Oct. 1848	Medium	2·505	0·710	10·223	1·680	4	1·935	2·008	0·600	0·580	5·091	20·0	7-10
7	1	1016·5	10th Oct. 1848	Medium	2·505	0·710	10·223	1·680	4	1·935	2·008	0·600	0·580	5·091	9·5	7-10
8	1	1016·5	10th Oct. 1848	Medium	2·505	0·710	10·223	1·680	4	1·935	2·008	0·600	0·580	5·091	17·0	7-10
9	1	1016·5	10th Oct. 1848	Low	2·505	0·710	10·223	1·680	4	1·935	2·008	0·600	0·580	5·091	8·5	9-10
10	1	1016·5	10th Oct. 1848	Low	2·505	0·710	10·223	1·680	4	1·935	2·008	0·600	0·580	5·091	4·0	9-10
11	1	1016·5	10th Oct. 1848	Low	2·505	0·710	10·223	1·680	4	1·935	2·008	0·600	0·580	5·091	3·0	9-10
12	1	1016·5	10th Oct. 1848	Low	2·505	0·710	10·223	1·680	4	1·935	2·008	0·600	0·580	5·091	7·0	9-10
1 D	2	...	31st Oct. 1848	Low	...	...	...	1·680	4	1·935	2·010	0·450	0·443	5·091	...	92-100
2	2	...	31st Oct. 1848	Low	...	...	...	1·680	4	1·935	2·010	0·450	0·443	5·091	...	92-100
3	2	...	31st Oct. 1848	Low	...	...	...	1·680	4	1·935	2·010	0·450	0·443	5·091	...	92-100
4	2	...	31st Oct. 1848	Low	...	...	...	1·680	4	1·935	2·010	0·450	0·443	5·091	...	92-100
5	2	...	31st Oct. 1848	Medium	...	...	...	1·680	4	1·935	2·010	0·450	0·443	5·091	...	7-10
6	2	...	31st Oct. 1848	Medium	...	...	...	1·680	4	1·935	2·010	0·450	0·443	5·091	...	7-10
7	2	...	31st Oct. 1848	Medium	...	...	...	1·680	4	1·935	2·010	0·450	0·443	5·091	...	7-10
8	2	...	31st Oct. 1848	Medium	...	...	...	1·680	4	1·935	2·010	0·450	0·443	5·091	...	7-10
9	2	...	31st Oct. 1848	High	...	...	...	1·680	4	1·935	2·010	0·450	0·443	5·091	...	5-10
10	2	...	31st Oct. 1848	High	...	...	...	1·680	4	1·935	2·010	0·450	0·443	5·091	...	5-10
11	2	...	31st Oct. 1848	High	...	...	...	1·680	4	1·935	2·010	0·450	0·443	5·091	...	5-10
1	3	...	3d Nov. 1848	Low	...	...	...	1·680	4	1·935	2·053	0·375	0·326	5·091	...	92-100
2	3	...	3d Nov. 1848	Low	...	...	...	1·680	4	1·935	2·053	0·375	0·326	5·091	...	92-100
3	3	...	3d Nov. 1848	Low	...	...	...	1·680	4	1·935	2·053	0·375	0·326	5·091	...	92-100
4	3	...	3d Nov. 1848	Low	...	...	...	1·680	4	1·935	2·053	0·375	0·326	5·091	...	92-100
5	3	...	3d Nov. 1848	Medium	...	...	...	1·680	4	1·935	2·053	0·375	0·326	5·091	...	7-10
6	3	...	3d Nov. 1848	Medium	...	...	...	1·680	4	1·935	2·053	0·375	0·326	5·091	...	7-10
7	3	...	3d Nov. 1848	Medium	...	...	...	1·680	4	1·935	2·053	0·375	0·326	5·091	...	7-10
8	3	...	3d Nov. 1848	Medium	...	...	...	1·680	4	1·935	2·053	0·375	0·326	5·091	...	7-10
9	3	...	3d Nov. 1848	High	...	...	...	1·680	4	1·935	2·053	0·375	0·326	5·091	...	5-10
10	3	...	3d Nov. 1848	High	...	...	...	1·680	4	1·935	2·053	0·375	0·326	5·091	...	5-10
11	3	...	3d Nov. 1848	High	...	...	...	1·680	4	1·935	2·053	0·375	0·326	5·091	...	5-10
12	3	...	3d Nov. 1848	High	...	...	...	1·680	4	1·935	2·053	0·375	0·326	5·091	...	5-10
1	4	1016·5	29th Nov. 1848	Medium	2·505	0·75	10·2235	1·680	4	1·935	2·128	0·300	0·280	5·091	30·5	7-10
2	4	1016·5	29th Nov. 1848	Medium	2·505	0·75	10·2235	1·680	4	1·935	2·128	0·300	0·280	5·091	30·0	7-10
3	4	1016·5	29th Nov. 1848	Medium	2·505	0·75	10·2235	1·680	4	1·935	2·128	0·300	0·280	5·091	12·0	7-10
4	4	1016·5	29th Nov. 1848	Medium	2·505	0·75	10·2235	1·680	4	1·935	2·128	0·300	0·280	5·091	15·0	7-10
1	4	1016·5	30th Nov. 1848	Low	2·505	0·75	10·2235	1·680	4	1·935	2·128	0·300	0·280	5·091	31·5	85-100
2	4	1016·5	30th Nov. 1848	Low	2·505	0·75	10·2235	1·680	4	1·935	2·128	0·300	0·280	5·091	34·0	85-100
3	4	1016·5	30th Nov. 1848	Low	2·505	0·75	10·2235	1·680	4	1·935	2·128	0·300	0·280	5·091	32·5	85-100
4	4	1016·5	30th Nov. 1848	Low	2·505	0·75	10·2235	1·680	4	1·935	2·128	0·300	0·280	5·091	31·0	85-100
5	4	1016·5	30th Nov. 1848	Medium	2·505	0·75	10·2235	1·680	4	1·935	2·128	0·300	0·280	5·091	14·0	7-10
6	4	1016·5	30th Nov. 1848	Medium	2·505	0·75	10·2235	1·680	4	1·935	2·128	0·300	0·280	5·091	18·5	7-10
7	4	1016·5	30th Nov. 1848	Medium	2·505	0·75	10·2235	1·680	4	1·935	2·128	0·300	0·280	5·091	18·5	7-10
8	4	1016·5	30th Nov. 1848	Medium	2·505	0·75	10·2235	1·680	4	1·935	2·128	0·300	0·280	5·091	23·0	7-10
9	4	1016·5	30th Nov. 1848	Medium	2·505	0·75	10·2235	1·680	4	1·935	2·128	0·300	0·280	5·091	21·0	7-10
1	6	1016·5	25th Sept. 1848	High	2·510	0·670	10·2235	1·680	4	2·361	2·365	0·600	0·600	5·091	36·25	35-100
2	6	1016·5	25th Sept. 1848	High	2·510	0·670	10·2235	1·680	4	2·361	2·365	0·600	0·600	5·091	34·0	35-100
3	6	1016·5	25th Sept. 1848	High	2·510	0·670	10·2235	1·680	4	2·361	2·365	0·600	0·600	5·091	34·25	35-100
4	6	1016·5	25th Sept. 1848	High	2·510	0·670	10·2235	1·680	4	2·361	2·365	0·600	0·600	5·091	36·5	35-100
5	6	1016·5	25th Sept. 1848	Low	2·510	0·670	10·2235	1·680	4	2·361	2·365	0·600	0·600	5·091	8·0	85-100
6	6	1016·5	25th Sept. 1848	Low	2·510	0·670	10·2235	1·680	4	2·361	2·365	0·600	0·600	5·091	8·5	85-100
7	6	1016·5	25th Sept. 1848	Low	2·510	0·670	10·2235	1·680	4	2·361	2·365	0·600	0·600	5·091	4·0	85-100
8	6	1016·5	25th Sept. 1848	Low	2·510	0·670	10·2235	1·680	4	2·361	2·365	0·600	0·600	5·091	6·5	85-100
9	6	1016·5	25th Sept. 1848	Medium	2·510	0·670	10·2235	1·680	4	2·361	2·365	0·600	0·600	5·091	9·0	7-10
10	6	1016·5	25th Sept. 1848	Medium	2·510	0·670	10·2235	1·680	4	2·361	2·365	0·600	0·600	5·091	24·0	7-10
11	6	1016·5	25th Sept. 1848	Medium	2·510	0·670	10·2235	1·680	4	2·361	2·365	0·600	0·600	5·091	27·0	7-10
12	6	1016·5	25th Sept. 1848	Medium	2·510	0·670	10·2235	1·680	4	2·361	2·365	0·600	0·600	5·091	21·0	7-10
1	7	1016·5	29th Aug. 1848	Medium	2·650	0·740	11·073	1·680	4	2·361	2·414	0·450	0·443	5·091	27·0	7-10
2	7	1016·5	29th Aug. 1848	Medium	2·650	0·740	11·073	1·680	4	2·361	2·414	0·450	0·443	5·091	31·25	7-10
3	7	1016·5	29th Aug. 1848	Medium	2·650	0·740	11·073	1·680	4	2·361	2·414	0·450	0·443	5·091	28·5	7-10
4 A	7	1016·5	22d Sept. 1848	High	2·650	0·740	11·073	1·680	4	2·361	2·414	0·450	0·443	5·091	32·62	4-10
5	7	1016·5	22d Sept. 1848	High	2·650	0·740	11·073	1·680	4	2·361	2·414	0·450	0·443	5·091	30·125	4-10
6	7	1016·5	22d Sept. 1848	High	2·650	0·740	11·073	1·680	4	2·361	2·414	0·450	0·443	5·091	30·37	4-10
7	7	1016·5	22d Sept. 1848	High	2·650	0·740	11·073	1·680	4	2·361	2·414	0·450	0·443	5·091	23·87	4-10
8	7	1016·5	22d Sept. 1848	High	2·650	0·740	11·073	1·680	4	2·361	2·414	0·450	0·443	5·091	27·37	4-10
9	7	1016·5	22d Sept. 1848	Medium	2·650	0·740	11·073	1·680	4	2·361	2·414	0·450	0·443	5·091	18·0	7-10
10	7	1016·5	22d Sept. 1848	Medium	2·650	0·740	11·073	1·680	4	2·361	2·414	0·450	0·443	5·091	14·5	7-10
11	7	1016·5	22d Sept. 1848	Medium	2·650	0·740	11·073	1·680	4	2·361	2·414	0·450	0·443	5·091	34·0	7-10
12	7	1016·5	22d Sept. 1848	Medium	2·650	0·740	11·073	1·680	4	2·361	2·414	0·450	0·443	5·091	16·5	7-10
13	7	1016·5	22d Sept. 1848	Low	2·650	0·740	11·073	1·680	4	2·361	2·414	0·450	0·443	5·091	11·5	85-100
14	7	1016·5	22d Sept. 1848	Low	2·650	0·740	11·073	1·680	4	2·361	2·414	0·450	0·443	5·091	9·0	85-100
15	7	1016·5	22d Sept. 1848	Low	2·650	0·740	11·073	1·680	4	2·361	2·414	0·450	0·443	5·091	5·0	85-100
16	7	1016·5	22d Sept. 1848	Low	2·650	0·740	11·073	1·680	4	2·361	2·414	0·450	0·443	5·091	3·5	85-100
17	7	1016·5	22d Sept. 1848	Low	2·650	0·740	11·073	1·680	4	2·361	2·414	0·450	0·443	5·091	5·5	85-100
1	8	1016·5	28th Sept. 1848	High	2·500	0·820	...	1·680	4	2·361	2·459	0·375	0·360	5·091	33·25	35-100
2	8	1018·5	28th Sept. 1848	High	2·500	0·820	...	1·680	4	2·361	2·459	0·375	0·360	5·091	42·75	35-100
3	8	1016·5	28th Sept. 1848	High	2·500	0·820	...	1·680	4	2·361	2·459	0·375	0·360	5·091	40·0	35-100
4	8	1016·5	28th Sept. 1848	High	2·500	0·820	...	1·680	4	2·361	2·459	0·375	0·360	5·091	35·375	35-100
5	8	1016·5	28th Sept. 1848	Medium	2·500	0·820	...	1·680	4	2·361	2·459	0·375	0·360	5·091	19·0	35-100
6	8	1016·5	28th Sept. 1848	Medium	2·500	0·820	...	1·680	4	2·361	2·459	0·375	0·360	5·091	18·5	35-100
7	8	1016·5	28th Sept. 1848	Medium	2·500	0·820	...	1·680	4	2·361	2·459	0·375	0·360	5·091	21·5	35-100
8	8	1016·5	28th Sept. 1848	Medium	2·500	0·820	...	1·680	4	2·361	2·459	0·375	0·360	5·091	17·0	35-100
9	8	1016·5	28th Sept. 1848	Low	2·500	0·820	...	1·680	4	2·361	2·459	0·375	0·360	5·091	8·0	98-100
10	8	1016·5	28th Sept. 1848	Low	2·500	0·820	...	1·680	4	2·361	2·459	0·375	0·360	5·091	7·0	98-100
11	8	1016·5	28th Sept. 1848	Low	2·500	0·820	...	1·680	4	2·361	2·459	0·375	0·360	5·091	8·0	98-100

SCREW STEAM PACKET "PELICAN" — *continued.*

mètre is 10·764 square feet; and a centimètre is 0·39371 English inches.)

Number of Turns of the Screw per Second.	Absolute Speed of the Vessel in Mètres per Second.	Advance per Turn of the Screw in Mètres.	Mean Coefficient of Slip with Intended Pitch.	Mean Coefficient of Slip with Actual Pitch.	Mean Pressure in the Cylinders in Centimètres of Mercury.	Value of $\left(\frac{p}{n^2}\right)$	Value of $\left(\frac{p-5}{n^2}\right)$	Efficiency or Utilization with p.	Efficiency or Utilization with $(p-5)$.	Mean Speed of the Vessel in Knots.	Speed shown by the Log in Knots.	State of the Wind and Sea, and Remarks.	Number of the Run, A. ascending, D. descending.
2·936	5·616	...	0·2096	0·2380	...	...	...	...	...	10·9	9·3	Stormy breeze W.N.W. (wind and current aft)	A
2·982	3·489	1·532	0·2096	0·2380	58·15	1·2845	1·1739	K × 0·05543	K × 0·06064	6·8	8·0	Ditto.	2
3·113	5·809	1·528	0·2096	0·2380	56·65	1·1483	1·0469	K × 0·06199	K × 0·06799	11·3	9·6	Ditto.	3
2·950	3·481	...	0·2096	0·2380	58·95	1·3225	1·2104	K × 0·05383	K × 0·05882	6·8	8·0	Ditto.	4
2·590	5·083	...	0·1953	0·2246	39·062	1·1764	1·0203	K × 0·06411	K × 0·07357	9·9	8·7	Pleasant gale, W.N.W.	5
2·345	2·675	1·559	0·1953	0·2246	39·45	1·3730	1·1987	K × 0·05466	K × 0·06259	5·2	6·0	Pleasant gale, W.N.W.	6
2·361	4·600	1·555	0·1953	0·2246	34·125	1·5024	1·0272	K × 0·06240	K × 0·07312	8·9	8·0	Pleasant gale, W.N.W.	7
2·275	2·651	...	0·1953	0·2246	37·587	1·4350	1·2469	K × 0·05216	K × 0·06156	5·1	6·0	Pleasant gale, W.N.W.	8
2·154	3·765	...	0·2075	0·2365	29·762	1·2839	1·0678	K × 0·05495	K × 0·06604	7·3	7·0	Strong breeze, W.N.W. (chopping).	
1·869	2·491	1·326	0·2075	0·2365	28·175	1·5853	1·3035	K × 0·04451	K × 0·05410	4·8	4·5	Ditto.	10
2·031	3·344	1·544	0·2075	0·2365	25·85	1·2317	0·9935	K × 0·05727	K × 0·07100	6·5	6·8	Ditto.	11
1·922	2·921	...	0·2075	0·2365	28·50	1·5157	1·2498	K × 0·04653	K × 0·05643	5·7	4·7	Ditto.	12
1·866	2·109	...	0·1714	0·2025	25·15	1·4708	1·1862	K × 0·05551	K × 0·06882	4·1	5·0	Light airs from S. E.	1 D
1·973	4·236	1·676	0·1714	0·2025	27·425	1·3724	1·1243	K × 0·05674	K × 0·06940	8·2	6·0	Light airs from E.S.E.	2
1·837	1·701	1·601	0·1714	0·2025	25·425	1·4796	1·1883	K × 0·05517	K × 0·06867	3·3	5·0	Light airs from E.S.E.	3
1·825	4·326	...	0·1714	0·2025	25·650	1·5124	1·2180	K × 0·05393	K × 0·06704	8·4	5·8	Faint breeze from S.E.	4
2·572	2·647	...	0·1947	0·2249	43·51	1·2918	1·1435	K × 0·05857	K × 0·06618	5·1	8·0	Faint breeze from S.E.	5
2·653	5·350	1·552	0·1947	0·2249	42·61	1·1715	1·0342	K × 0·06299	K × 0·07137	10·4	8·4	Faint breeze from S.E.	6
2·600	2·913	1·565	0·1947	0·2249	39·375	1·1440	0·99865	K × 0·0 614	K × 0·07577	5·7	8·0	Faint breeze from S.E.	7
2·588	5·160	...	0·1947	0·2249	40·61	1·1914	1·0449	K × 0·06351	K × 0·07243	10·0	7·8	Faint breeze from S.E.	8
2·968	3·400	...	0·2008	0·2308	52 037	1·1522	1·0658	K × 0·06330	K × 0·06844	6·6	8·8	Faint breeze from S.S.W.	9
2·843	5·535	1·546	0·2008	0·2308	48·425	1·1770	1·0555	K × 0·06197	K × 0·06911	10·9	9·0	Faint breeze from S.S.W.	10
2·777	3·137	...	0·2008	0·2308	45·900	1·1750	1·0506	K × 0·0688	K × 0·06243	6·1	8·5	Faint breeze from S.S.W.	11
2·005	2·847	...	0·1580	0·2075	26·72	1·3054	1·0593	K × 0·06419	K × 0·06897	5·0	6·0	Light airs from S.W.	1
1·881	3·4 5	1·636	0·1590	0·2075	24·5·7	1·3662	1·0883	K × 0·06293	K × 0·07901	5·0	5·8	Light airs from S.W.	2
1·812	2·740	1·619	0·1590	0·2075	23·70	1·3731	1·0587	K × 0·06324	K × 0·08055	5·0	5·6	Light airs from S.W.	3
1·937	3·157	...	0·1590	0·2075	25·937	1·3581	0·9447	K × 0·06301	K × 0·07815	5·0	6·0	Light airs from S.W.	4
2·389	3·417	...	0·1881	0·2348	35·80	1·2317	1·0599	K × 0·06268	K × 0·07286	7·9	6·8	Light breeze.	5
2·537	4·478	1·575	0·1881	0·2348	39·95	1·2009	1·0506	K × 0·06363	K × 0·07273	7·9	7·5	Light breeze.	6
2·664	3·637	1·567	0·1881	0·2348	41·325	1·1440	1·0053	K × 0·06646	K × 0·07562	7·9	7·5	Almost calm.	7
2·634	4·728	...	0·1881	0·2348	41·725	1·1925	1·0494	K × 0·06377	K × 0·07246	7·9	7·8	Almost calm.	8
2·779	3·715	...	0·1926	0·2392	45·475	1·1571	1·0296	K × 0·06601	K × 0·07416	8·8	8·2	Faint breeze from S.	9
2·853	5·121	1·568	0·1926	0·2392	47·125	1·1444	1·0276	K × 0·06673	K × 0·07460	8·8	8·5	Faint breeze from S.	10
2·976	3·979	1·556	0·1926	0·2392	50·537	1·1205	1·0097	K × 0·06643	K × 0·07376	8·8	9·0	Faint breeze from S.	11
2·965	5·240	...	0·1926	0·2392	51·125	1·1420	1·0203	K × 0·06522	K × 0·07229	8·8	9·0	Faint breeze from S.	12
2·935	5·876	...	0·2·98	0·2813	46·20	1·1826	1·0522	K × 0·06044	K × 0·06768	8·2	9·0	Strong breeze from W.S.W.	1
2·833	3·062	1·532	0·2098	0·2813	45·85	1·1219	0·9997	K × 0·06372	K × 0·07152	8·2	7·8	Strong breeze from W.S.W.	2
2·637	5·213	1·526	0·2098	0·2813	40·46	1·1901	0·9786	K × 0·06256	K × 0·07305	8·2	8·2	Strong breeze from W.S.W.	3
2·614	2·021	...	0·2098	0·2813	41·15	1·1561	1·0161	K × 0·06183	K × 0·07038	8·2	7·0	The breeze freshens a little.	4
2·458	5·134	...	0·1945	0·2678	35·025	1·1387	0·97614	K × 0·06719	K × 0·07837	7·5	6·8	Light breeze N.N.W.(abeam).	1
2·487	2·574	1·556	0·1945	0·2678	35·575	1·1297	0·94897	K × 0·06771	K × 0·07878	7·5	6·8	Light breeze N.N.W.(abeam).	2
2·506	5·186	1·561	0·1945	0·2678	35·510	1·1113	0·95462	K × 0·06885	K × 0·08014	7·5	7·0	Light breeze N.N.W.(abeam).	3
2·497	2·654	...	0·1945	0·2678	35·925	1·1127	0·93764	K × 0·06876	K × 0·07988	7·5	7·4	Light breeze N.N.W.(abeam).	4
2·562	5·082	...	0·2050	0·2768	37·950	1·1470	0·98566	K × 0·06648	K × 0·07657	7·9	7·3	The breeze slackens a little.	5
2·648	3·034	1·552	0·2050	0·2768	40·225	1·1269	0·98673	K × 0·06168	K × 0·07914	7·9	7·6	Faint breeze from N.N.W.	6
2·619	5·108	1·543	0·2050	0·2768	39·950	1·1430	1·0001	K × 0·06376	K × 0·07258	7·9	7·5	Faint breeze from N.N.W.	7
2·750	3·034	1·534	0·2050	0·2768	41·900	1·0883	0·95865	K × 0·06595	K × 0·07604	7·9	8·0	Faint breeze from N.N.W.	8
2·694	5·407	...	0·2050	0·2768	40·775	1·1073	0·96783	K × 0·06606	K × 0·07705	7·9	7·8	Faint breeze from N.N.W.	9
2·596	5·336	...	0·2431	0·2444	65·04	1·7500	1·6019	K × 0·06582	K × 0·07180	9·2	9·4	Light breeze S.E. (smooth sea).	1
2·608	4·149	1·595	0·2431	0·2444	59·11	1·7073	1·5626	K × 0·06748	K × 0·07372	9·2	9·2	Light breeze S.E. (smooth sea).	2
2·587	5·032	1·779	0·2431	0·2444	59·65	...	...	...	...	9·2	9·0	Light breeze S.E. (smooth sea).	3
2·650	4·391	...	0·2431	0·2444	59·98	1·6779	1·5379	K × 0·06707	K × 0·07317	9·2	9·5	Faint breeze (smooth sea).	4
1·767	3·446	...	0·2202	...	32·32	2·345	1·7191	K × 0·06230	K × 0·07370	6·2	6·5	Faint breeze from E.	5
1·787	3·147	1·847	0·2202	...	30·42	1·8726	1·5752	K × 0·06767	K × 0·08003	6·2	7·0	Light breeze from E.	6
1·560	3·003	1·859	0·2202	...	28·60	2·1896	1·9132	K × 0·05904	K × 0·07148	6·2	11·0	Light breeze from E.	7
1·726	3·177	...	0·2202	...	29·01	1·9119	1·5835	K × 0·06626	K × 0·08006	6·2	6·7	Light breeze from E.	8
1·936	2·504	...	0·2156	0·2169	36·46	1·9106	1·6485	K × 0·06618	K × 0·07701	7·9	6·5	Light breeze from E.	9
2·225	4·971	1·836	0·2156	0·2169	43·01	1·7063	1·5082	K × 0·07352	K × 0·08320	7·9	7·4	Faint breeze from E.	10
2·230	3·147	1·843	0·2156	0·2169	45·74	1·8068	1·6086	K × 0·06947	K × 0·07810	7·9	7·4	Faint breeze from E.	11
2·223	5·199	...	0·2156	0·2169	42·52	1·6893	1·4909	K × 0·07426	K × 0·08416	7·9	8·0	Faint breeze from E.	12
2·393	5·792	...	0·2641	0·2804	47·80	1·6386	1·4584	K × 0·06893	K × 0·07701	8·0	8·0	Dead calm (strong current).	1
2·404	2·519	1·737	0·2641	0·2804	47·187	1·6030	1·4337	K × 0·07043	K × 0·07876	8·0	5·0	Dead calm (strong current).	2
2·310	5·695	...	0·2631	0·2804	43·928	1·6894	1·5057	K × 0·06686	K × 0·07501	8·0	7·7	Dead calm (strong current).	3
2·565	3·751	...	0·2504	0·2676	...	...	...	...	...	8·9	9·2	Faint breeze S.W.(smooth sea).	4 A
2·576	5·465	1·789	0·2504	0·2676	54·85	1·5861	1·4748	K × 0·07060	K × 0·07768	8·9	9·2	Faint breeze S.W.(smooth sea).	5
2·511	3·670	1·774	0·2504	0·2676	52·20	1·6438	1·4860	K × 0·06983	K × 0·07724	8·9	9·0	Light breeze S.W.(smooth sea).	6
2·638	5·178	1·742	0·2504	0·2676	58·225	1·6327	1·4925	K × 0·06843	K × 0·07486	8·9	10·0	Light breeze S.W.(smooth sea).	7
2·699	3·895	...	0·2504	0·2676	61·14	1·6880	1·5140	K × 0·06776	K × 0·07379	8·9	9·6	Pleasant breeze, S.W.(sm.sea).	8
2·250	4·819	...	0·2503	0·2647	42·0	1·6298	1·4359	K × 0·06856	K × 0·07783	7·84	7·715	Faint breeze from S.W.	9
2·111	2·990	1·774	0·2503	0·2647	42·125	1·7556	1·3821	K × 0·06363	K × 0·07266	7·84	7·715	Faint breeze from S.W.	10
2·444	5·020	1·776	0·2503	0·2647	49·34	1·6456	1·4796	K × 0·06813	K × 0·07581	7·84	7·715	Faint breeze from S.W.	11
2·207	3·390	...	0·2503	0·2647	42·14	1·6999	1·4983	K × 0·06595	K × 0·07683	7·84	7·715	Fnt. breeze S.W.(almost calm).	12
1·951	4·200	...	0·2330	0·2494	33·46	1·7268	1·5026	K × 0·06932	K × 0·08050	6·6	7·3	Very faint breeze from S.W.	13
1·949	2·942	1·815	0·2330	0·2494	34·0	1·7591	1·4999	K × 0·07695	K × 0·07967	6·6	7·4	Very faint breeze from S.W.	14
1·899	3·986	1·810	0·2330	0·2494	...	...	...	...	...	6·6	7·6	Very faint breeze from S.W.	15
1·730	2·617	1·809	0·2330	0·2494	...	...	...	...	...	6·6	6·2	Very faint breeze from S.W.	16
1·809	3·744	...	0·2330	0·2494	...	...	...	...	...	6·6	7·0	Very faint breeze from S.W.	17
2·642	6·161	...	0·2470	0·2769	59·85	1·6852	1·5449	K × 0·06611	K × 0·07214	9·3	9·0	Almost calm.	1
2·682	3·41	1·780	0·2470	0·2769	63·91	1·7534	1·6707	K × 0·06354	K × 0·06894	9·3	9·0	Almost calm.	2
2·738	6·142	1·776	0·2470	0·2769	64·29	1·6852	1·5537	K × 0·06612	K × 0·07169	9·3	9·0	Almost calm.	3
2·646	3·487	...	0·2470	0·2769	60·14	1·6844	1·5475	K × 0·06602	K × 0·07200	9·3	9·3	Almost calm.	4
2·270	5·240	...	0·2070	0·2484	43·74	1·6646	1·4740	K × 0·07519	K × 0·08186	...	8·0	Light airs from W.	5
2·255	3·137	1·846	0·2070	0·2484	43 99	1·6707	1·4805	K × 0·07486	K × 0·08445	...	7·7	Light airs from W.	6
2·287	3·226	1·851	0·2070	0·2484	45·02	1·7235	1·5319	K × 0·07260	K × 0·08167	...	8·3	Light airs from W.	7
2·224	3·167	...	0·2070	0·2484	44·02	1·7478	1·5493	K × 0·07158	K × 0·08074	...	7·8	Light airs from W.	8
1·967	4·381	...	0·2090	0·3574	34·52	1·7534	1·4991	K × 0·07089	K × 0·08239	6·9	7·0	Calm.	9
1·905	2·859	1·848	0·2090	0·3574	33·85	1·7855	1·5242	K × 0·06960	K × 0·08171	6·9	6·8	Calm.	10
1·941	4·166	1·840	0·2090	0·3574	33·62	1·7556	1·4934	K × 0·07036	K × 0·08323	6·9	6·8	Calm.	11

RESULT OF EXPERIMENTS MADE WITH THE FRENCH

(A mètre is 39·37079 English inches, or 3·2808 English feet; a square

Number of the Run. A. ascending, D. descending.	Numbers of the Screws. See Table IV.	Length of each Run in Mètres.	Date of Experiment.	High Speed, Medium Speed, or Low Speed.	Mean Draught of Water in Mètres.	Difference of Draught at Bow and Stern in Mètres.	Area of Immersed Mid-ship Section in Square Mètres.	Diameter of Screw in Mètres.	Number of Blades to Screw.	Intended Pitch of Screw in Mètres.	Actual Pitch of Screw in Mètres.	Intended Fraction of Pitch.	Actual Fraction of Pitch.	Multiple of Gearing.	Mean Pressure in the Boiler in Centimètres of Mercury.	Proportion of Stroke made without Expansion.
12 A	8	1016·5	28th Sept. 1848	Low	2·500	0·820	...	1·680	4	2·361	2·459	0·375	0·360	5·091	7·5	98-100
1	9	1016·5	7th Oct. 1848	High	2·515	0·680	10·2745	1·680	4	2·361	2·484	0·300	0·280	5·091	22·62	35-100
2	9	1016·5	7th Oct. 1848	High	2·515	0·680	10·2745	1·680	4	2·361	2·484	0·300	0·280	5·091	30·12	35-100
3	9	1016·5	7 h Oct. 1848	High	2·515	0·680	10·2745	1·6 0	4	2·361	2·484	0·300	0·280	5·091	47·0	35-100
4	9	1016·5	7th Oct. 1848	High	2·515	0·680	10·2745	1·680	4	2·361	2·484	0·300	0·280	5·091	50·0	35-100
5	9	1016·5	7th Oct. 1848	Medium	2·515	0·680	10·2745	1·680	4	2·361	2·484	0·300	0·280	5·091	27·5	35-100
6	9	1016·5	7th Oct. 1848	Medium	2·515	0·680	10·2745	1·680	4	2·361	2·484	0·300	0·280	5·091	24·0	35-100
7	9	1016·5	7th Oct. 1848	Medium	2·515	0·680	10·2745	1·680	4	2·361	2·484	0·300	0·280	5·091	26·0	35-100
8	9	1016·5	7th Oct. 1848	Medium	2·515	0·680	10·2745	1·680	4	2·361	2·484	0·300	0·280	5·091	26·5	35-100
9	9	1016·5	7th Oct. 1848	Low	2·515	0·680	10·2745	1·680	4	2·361	2·484	0·300	0·280	5·091	11·5	70-100
10	9	1016·5	7th Oct. 1848	Low	2·515	0·680	10·2745	1·680	4	2·361	2·484	0·300	0·280	5·091	8·0	70-100
11	9	1016·5	7th Oct. 1848	Low	2·515	0·680	10·2745	1·680	4	2·361	2·484	0·300	0·280	5·091	7·5	70-100
12	9	1016·5	7th Oct. 1848	Low	2·515	0·680	10·2745	1·680	4	2·361	2·484	0·300	0·280	5·091	10·5	70-100
13	9	1016·5	7th Oct. 1848	Low	2·515	0·680	10·2745	1·680	4	2·361	2·484	0·300	0·280	5·091	5·5	70-100
1	13	1016·5	12th July, 1848	Medium	2·490	0·700	10·1555	1·680	4	2 880	2·872	0·750	0·770	5·091	8·5	70-100
2	13	1016·5	12th July, 1848	Medium	2·490	0·700	10·1555	1·680	4	2·880	2·872	0·750	0·770	5·091	12·0	70-100
3	13	1016·5	12th July, 1848	Medium	2·490	0·700	10·1555	1·680	4	2·880	2·872	0·750	0·770	5·091	15·0	70-100
4	13	1016·5	12th July, 1848	Medium	2·490	0·700	10·1555	1·680	4	2·880	2·872	0·750	0·770	5·091	15·5	70-100
5	13	1016·5	12th July, 1848	Medium	2·490	0·700	10·1555	1·680	4	2·880	2·872	0·750	0·770	5·091	15·0	70-100
6 D	13	1016·5	12th July, 1848	Medium	2·490	0·700	10·1555	1·680	4	2·880	2·872	0·750	0·770	5·091	22·53	70-100
7	13	1016·5	12th July, 1848	Medium	2·490	0·700	10·1555	1·680	4	2·880	2·872	0·750	0·770	5·091	37·16	70-100
8	13	1016·5	12th July, 1848	Medium	2·490	0·700	10·1555	1·680	4	2·880	2·872	0·750	0·770	5·091	32·33	70-100
9	13	1016·5	12th July, 1848	Medium	2·490	0·700	10·1555	1·680	4	2·880	2·872	0·750	0·770	5·091	39·66	70-100
10	13	1016·5	12th July, 1848	High	2·490	0·700	10·1555	1·680	4	2·880	2·872	0·750	0·770	5·091	46·0	30-100
11	13	1016·5	12th July, 1848	High	2·490	0·700	10·1555	1·680	4	2·880	2·872	0·750	0·770	5·091	35·83	30-100
12	13	1016·5	12th July, 1848	High	2·490	0·700	10·1555	1·680	4	2·880	2·872	0·750	0·770	5·091	30·0	30-100
13	13	1016·5	12th July, 1848	High	2·490	0·700	10 1555	1·680	4	2·880	2·872	0·750	0·770	5·091	20·66	30-100
1 A	14	1016·5	4th July, 1848	Medium	2·510	0·660	10·2235	1·680	4	2·880	2·908	0·600	0·590	5·091	14·0	70-100
2	14	1016·5	4th July, 1848	Medium	2 510	0·660	10·2235	1·680	4	2·880	2·908	0·600	0·590	5·091	12·0	70-100
3	14	1016·5	4th July, 1848	Medium	2·510	0·660	10·2235	1·680	4	2·880	2·908	0·600	0·590	5·091	8·0	70-100
4	14	1016·5	4th July, 1848	Medium	2·510	0·660	10 2235	1·680	4	2·880	2·908	0·600	0·590	5·091	7·0	70-100
5	14	1016·5	4th July, 1848	Medium	2·510	0 660	10·2235	1·680	4	2·880	2·908	0·600	0·590	5·091	10·0	70-100
6	14	1016·5	4th July, 1848	Low	2·510	0 660	10·2235	1·680	4	2·880	2·908	0·600	0·590	5·091	2·0	70-100
7	14	1016·5	4th July, 1848	Low	2·510	0·660	10·2235	1·680	4	2·880	2·908	0·600	0·590	5·091	6·5	70-100
8	14	1016·5	4th July, 1848	Low	2·510	0·660	10·2235	1·680	4	2·880	2·908	0·600	0·590	5·091	7·0	70-100
9	14	1016·5	4th July, 1848	Low	2·510	0·660	10·2235	1·680	4	2·880	2·908	0·600	0·590	5·091	7·0	70-100
10	14	1016·5	4th July, 1848	Low	2·510	0·660	10·2235	1·680	4	2·880	2·908	0·600	0·590	5·091	3·0	70-100
11	14	1016·5	4th July, 1848	Soft	2·510	0·660	10·2235	1·680	4	2·880	2·908	0·600	0·590	5·091	16·0	70-100
12	14	1016·5	4th July, 1848	Soft	2·510	0·660	10·2235	1·680	4	2·880	2·908	0·600	0·590	5·091	11·0	70-100
13	14	1016·5	4th July, 1848	Soft	2·510	0·660	10·2235	1·680	4	2·880	2·908	0·600	0·590	5·091	9·0	70-100
14	14	1016·5	4th July, 1848	High	2·510	0·660	10·2235	1·680	4	2·880	2·908	0·600	0·590	5·091	42·0	70-100
15	14	1016·5	4th July, 1848	High	2 510	0·660	10·2235	1·680	4	2·880	2·908	0·600	0·590	5·091	42·7	70-100
16	14	1016·5	4th July, 1848	High	2·510	0·660	10·2235	1·680	4	2·880	2·908	0·600	0·590	5·091	40·0	70-100
1	15	1016·5	7th July, 1848	Medium	2·485	0·570	...	1·680	4	2·880	3·000	0·450	0·438	5·091	0·40	70-100
2	15	1016·5	7th July, 1848	Medium	2·485	0·570	...	1·680	4	2·880	3·000	0·450	0·438	5·091	0·55	70-100
3	15	1016·5	7th July, 1848	Medium	2·485	0·570	...	1·680	4	2·880	3·000	0·450	0·438	5·091	8·0	70-100
4	15	1016·5	7th July, 1848	Medium	2·485	0·570	...	1·680	4	2·880	3·000	0·450	0·438	5·091	6·5	70-100
5	15	1016·5	7th July, 1848	Medium	2·485	0·570	...	1·680	4	2·880	3·000	0·450	0·438	5·091	4·5	70-100
6	15	1016·5	7th July, 1848	Low	2·485	0·570	...	1·680	4	2·880	3·000	0·450	0·438	5·091	7·0	70-100
7	15	1016·5	7th July, 1848	Low	2·485	0·570	...	1·680	4	2·880	3·000	0·450	0·438	5·091	7·0	70-100
8	15	1016 5	7th July, 1848	Low	2·485	0·570	...	1·680	4	2·880	3·000	0·450	0·438	5·091	12·0	70-100
9	15	1016·5	7th July, 1848	Between Medium and High	2 485	0·570	...	1·680	4	2·880	3·000	0·450	0·438	5·091	22·0	70-100
10	15	1016·5	7th July, 1848	Between Medium and High	2·485	0·570	...	1·680	4	2·880	3·000	0·450	0·438	5·091	34·5	70-100
11	15	1016·5	7th July, 1848	Between Medium and High	2·485	0·570	...	1·680	4	2·880	3·000	0·450	0·438	5·091	30·3	70-100
1	15	1016·5	17th Oct. 1848	High	2·515	0·690	10·2915	1·680	4	2·880	3·000	0·450	0·438	5·091	19·87	20-100
2	15	1016·5	17th Oct. 1848	High	2·515	0·690	10·2915	1·680	4	2·880	3·000	0·450	0·438	5·091	31·75	20-100
3	15	1016·5	17th Oct. 1848	High	2·515	0·690	10·2915	1·680	4	2·880	3·000	0·450	0·438	5·091	25·375	20-100
4	15	1016·5	17th Oct. 1848	High	2·515	0·690	10·2915	1·680	4	2·880	3·000	0·450	0·438	5·091	27·625	20-100
5	15	1016·5	17th Oct. 1848	High	2·515	0·690	10·2915	1·680	4	2·880	3·000	0·450	0·438	5·091	...	20-100
6 D	15	1016·5	17th Oct. 1848	Medium	2 515	0·690	10·2915	1·680	4	2·880	3·000	0·450	0·438	5·091	...	70-100
7	15	1016·5	17th Oct. 1848	Medium	2·515	0·690	10·2915	1·680	4	2·880	3·000	0·450	0·438	5·091	...	70-100
8	15	1016·5	17th Oct. 1848	Medium	2·515	0·690	10·2915	1·680	4	2·880	3·000	0·450	0·438	5·091	...	70-100
9	15	1016·5	17th Oct. 1848	Medium	2·515	0·690	10·2915	1·680	4	2·880	3·000	0·450	0·438	5·091	...	70-100
10 A	15	1016·5	17th Oct. 1848	Low	2·515	0·690	10·2915	1·680	4	2·880	3·000	0·450	0·438	5·091	...	70-100
11	15	1016·5	17th Oct. 1848	Low	2·515	0·690	10·2915	1·680	4	2·880	3·000	0·450	0·438	5·091	...	70-100
12	15	1016·5	17th Oct. 1848	Low	2·515	0·690	10·2915	1·680	4	2·880	3·000	0·450	0·438	5·091	...	70-100
13	15	1016·5	17th Oct. 1848	Low	2·515	0 690	10·2915	1·680	4	2·880	3·000	0·450	0·438	5·091	...	70-100

SCREW STEAM PACKET PELICAN"— *continued.*

mètre is 10·764 square feet; and a centimètre is 0·39371 English inches.)

Number of Turns of the Screw per Second.	Absolute Speed of the Vessel in Mètres per Second.	Advance per Turn of the Screw in Mètres.	Mean Coefficient of Slip with intended Pitch.	Mean Coefficient of Slip with Actual Pitch.	Mean Pressure in the Cylinders in Centimètres of Mercury.	Value of $\left(\frac{p}{r}\right)$ n^2	Value of $\left(\frac{p}{r}\right)$ n^3	Efficiency or Utilization with p.	Efficiency or Utilization with $(p-5)$.	Mean Speed of the Vessel in Knots.	Speed shown by the Log in Knots.	State of the Wind and Sea, and Remarks.	Number of the Run, A. ascending, D. descending.
1·920	2·990	...	0·2090	0·3574	34·15	1·7820	1·5217	K × 0·06970	K × 0·08167	6·9	...	Calm.	12 A
2·491	5·96	...	0·2671	0·3036	52·30	1·6545	1·4967	K × 0·06471	K × 0·07155	9·1	8·3	Almost calm.	1
2·652	3·865	1·733	0·2671	0·3036	58·275	1·5927	1·4559	K × 0·06612	K × 0·07233	9·1	9·5	Almost calm.	2
2·816	5·601	1·727	0·2671	0·3036	64·25	1·5927	1·4717	K × 0·06556	K × 0·07052	9·1	8·8	Almost calm.	3
2·897	4·253	...	0·2674	0·3036	67·05	1·5698	1·4528	K × 0·06594	K × 0·07125	9·1	8·5	Almost calm.	4
2·254	4·934	...	0·2120	0·2798	46·10	1·6337	1·4573	K × 0·06590	K × 0·07841	8·1	8·2	Light airs from N.W.	5
2·316	3·388	1·785	0·2420	0·2798	44·90	1·6818	1·4605	K × 0·06950	K × 0·07821	8·1	7·0	Light airs from N.W.	6
2·318	4·899	1·791	0·2120	0·2798	45·125	1·6185	1·4660	K × 0·06928	K × 0·07792	8·1	7·4	Light airs from N.W.	7
2·343	3·493	...	0·2420	0·2798	46·162	1·6491	1·4630	K × 0·06924	K × 0·07765	8·1	8·0	Light airs from N.W.	8
2·047	4·235	...	0·2216	0·2597	34·775	1·6298	1·3955	K × 0·07931	K × 0·08632	7·0	6·8	Light airs from W.	9
1·953	3·197	1·841	0·2216	0·2597	32·55	1·6758	1·4180	K × 0·07368	K × 0·08705	7·0	7·0	Light airs from W.	10
1·914	3·850	1·834	0·2216	0·2597	32·138	1·6212	1·4551	K × 0·07224	K × 0·08555	7·0	6·5	Light airs from W.	11
1·944	3·269	1·842	0·2216	0·2597	32·425	1·6852	1·4262	K × 0·07384	K × 0·08730	7·0	6·3	Light airs from W.	12
1·928	3·850	...	0·2216	0·2597	...	...	...	...	...	7·0	6·4	Light airs from W.	13
1·638	3·851	...	0·2750	0·2737	40·05 37·40	2·8266	2·4487	K × 0·063431	K × 0·073218	7·2	6·8	Strong breeze from N. E.	1
1·799	3·505	2·089	0·2750	0·2737	43·15 40·90	2·4828	2·1769	K × 0·072211	K × 0·082268	7·2	7·2	Strong breeze from N. E.	2
1·753	3·744	2·085	0·2750	0·2737	45·05 42·30	2·7043	2·3847	K × 0·06297	K × 0·075184	7·2	6·8	Strong breeze from N. E.	3
1·841	3·909	2·084	0·2750	0·2737	...	...	...	...	...	7·2	7·8	Light breeze from N. E. (chopping sea.)	4
1·728	3·366	...	0·2750	0·2737	...	...	...	...	...	7·2	7·6	Ditto (head wind).	5
1·891	4·750	...	0·2753	0·2733	46·5 45·4	2·3802	2·0630	K × 0·076636	K × 0·086407	8·2	7·8	Pleasant breeze from N. E.	6
2·045	3·333	2·082	0·2753	0·2733	57·45 55·70	2·6165	2·3816	K × 0·068720	K × 0·078497	8·2	7·8	Pleasant breeze from N. E.	7
2·100	5·436	2·095	0·2753	0·2733	55·3 54·0	2·3839	2·1632	K × 0·075424	K × 0·083120	8·2	9·2	Pleasant breeze from N. E.	8
2·038	3·192	...	0·2753	0·2733	61·4 59·8	2·6833	2·4590	K × 0·67610	K × 0·073858	8·2	8·6	Pleasant breeze from N. E.	9
2·522	6·180	...	0·2872	0·2890	78·7 76·10	2·3428	2·1887	K × 0·072952	K × 0·068090	9·2	10·4	...	10
2·321	3·663	2·053	0·2872	0·2890	72·05 69·50	2·5349	2·3525	K × 0·067423	K × 0·072650	9·2	9·3	...	11
2·294	5·910	2·052	0·2872	0·2890	63·6 61·0	2·2779	2·0912	K × 0·705031	K × 0·081730	9·2	9·4	...	12
2·142	3·090	...	0·2872	0·2890	69·95 67·50	2·8862	2·6649	K × 0·059216	K × 0·064101	9·2	9·11	...	13
1·874	5·160	...	0·2635	0·2706	46·3 43·6	2·4644	2·1818	K × 0·076772	K × 0·086708	7·4	7·0	Faint breeze from W. (current favourable).	1
1·790	2·658	2·111	0·2635	0·2706	48·7 42·0	2·4311	2·1287	K × 0 077826	K × 0·088884	7·4	7·0	Ditto.	2
1·824	4·887	2·126	0·2635	0·2706	43·9 41·4	2·4481	2·1584	K × 0·077285	K × 0·087901	7·4	7·3	Ditto.	3
1·737	2·819	2·120	0·2635	0·2706	42·8 40·3	2·6266	2·3007	K × 0·072032	K × 0·082237	7·4	7·2	Ditto.	4
1·815	4·559	...	0·2635	0·2706	43·4 40·8	2·4398	2·1408	K × 0·077548	K × 0·088379	7·4	7·0	Ditto.	5
1·539	2·5605	...	0·2682	0·2720	...	...	...	...	...	6·7	6·8	Calm.	6
1·631	4·124	2·120	0·2682	0·2720	...	...	...	...	...	6·7	6·8	Calm.	7
1·640	2·847	2·094	0·2682	0·2720	...	...	...	...	...	6·7	6·8	Calm.	8
1·667	3·955	2·121	0·2682	0·2720	...	...	...	...	...	6·7	7·0	Calm.	9
1·656	3·306	...	0·2682	0·2720	...	...	...	...	...	6·7	6·5	Calm.	10
1·395	2·232	...	0·2701	0·2772	...	...	...	...	...	5·3	5·8	Calm.	11
1·287	2·824	2·102	0·2701	0·2772	...	...	...	...	...	5·3	5·0	Calm.	12
1·182	2·249	...	0·2701	0·2772	...	...	...	...	...	5·3	5·2	Calm.	13
2·538	3·914	...	0·3072	0·3139	78·8 76·5	2·3378	2·1900	K × 0·067540	K × 0·072097	9·7	9·3	Faint breeze from W.	14
2·501	6·142	1·995	0·3072	0·3139	76·2 74·0	2·2433	2·0917	K × 0·070334	K × 0·075485	9·7	9·8	Faint breeze from W.	15
2·461	3·551	...	0·3072	0·3139	76·6 74·2	2·2493	2·978	K × 0·070195	K × 0·075267	9·7	9·7	Faint breeze from W.	16
1·628	4·166	....	0·2957	0·3233	...	...	...	...	...	6·3	6·8	Light breeze from N.W.	1
1·546	2·430	2·038	0·2957	0·3233	...	...	...	...	...	6·3	5·7	Light breeze from N.W.	2
1·610	3·872	2·021	0·2957	0·3233	...	...	...	...	...	6·3	6·6	Almost calm.	3
1·648	2·789	2·032	0·2957	0·3233	...	...	...	...	...	6·3	5·8	Almost calm.	4
1·630	3·829	...	0·2957	0·3233	...	...	...	...	...	6·3	6·8	Light breeze from W.	5
1·369	2·409	...	0·2960	0·3240	...	...	...	...	...	5·4	4·9	Light breeze from W.	6
1·459	3·099	2·028	0·2960	0·3240	...	...	...	...	...	5·4	5·8	Light breeze from W.	7
1·361	2·440	...	0·2960	0·3240	...	...	...	...	...	5·4	5·0	Light breeze from W.	8
1·820	3·948	...	0·3204	0·3477	50·65 48·60	2·8900	2·5867	K × 0·051214	K × 0·057996	7·2	6·8	Pleasant gale from W.	9
2·035	3·643	1·957	0·3204	0·3477	52·90 51·20	2·4374	2·1993	K × 0·061555	K × 0·068216	7·2	8·2	The wind freshens.	10
1·747	3·710	...	0·3204	0·3477	45·80 44·0	2·2344	2·5123	K × 0·052933	K × 0·059712	7·2	7·5	Strong gale from W.	11
2·245	4·750	...	0·3129	0·3407	59·5	...	...	K × 0·06583	K × 0·07187	9·5	9·0	Light breeze from E.	1
2·385	4·344	1·977	0·3129	0·3407	68·6	...	...	K × 0·06573	K × 0·07090	9·5	9·0	Light breeze from E.	2
2·378	5 134	1·981	0·3129	0·3407	64·237	...	...	K × 0·06605	K × 0·07154	9·5	9·5	Light breeze from E.	3
2·366	4·218	...	0·3129	0·3407	66·987	...	...	K × 0·06596	K × 0·07127	9·5	9·0	Light breeze from E.	4
...	...	...	0·3129	0·3407	66·225	...	...	K × 0·06652	K × 0·07198	9·5	...	Light breeze from E.	5
...	...	...	...	...	39·975	...	...	K × 0·06954	K × 0·07928	...	...	Pleasant breeze E. (wind astern; current favourable).	6 D
...	...	...	...	...	45·175	...	...	K × 0·07486	K × 0·08415	...	...	Ditto.	7
...	...	...	...	...	48·575	...	...	K × 0·07345	K × 0·08205	...	...	Ditto.	8
...	...	...	...	...	42·325	...	...	K × 0·0915	K × 0·07832	...	...	Ditto.	9
...	...	...	...	...	38·475	...	...	K × 0·07436	K × 0·08632	...	...	Light breeze from E.	10 A
...	...	...	...	...	38·400	...	...	K × 0·07420	K × 0·08615	...	...	Light breeze from E.	11
...	...	...	...	...	36·875	...	...	K × 0·06972	K × 0·08064	...	...	Light breeze from E.	12
...	...	...	...	...	34·263	...	...	K × 0·07634	K × 0·08935	...	...	Light breeze from E.	13

RESULT OF EXPERIMENTS MADE WITH THE FRENCH

(A mètre is 39·37079 English inches, or 3·2808 English feet; a square

Number of the Run. A. ascending, D. descending.	Numbers of the Series, see Table IV.	Length of each Run in Mètres.	Date of Experiment.	High Speed, Medium Speed, or Low Speed.	Mean Draught of Water in Mètres.	Difference of Draught at Bow and Stern in Mètres.	Area of Immerged Midship Sect on in Square Metres.	Diameter of Screw in Mètres.	Number of Blades of Screw.	Intended Pitch of Screw in Mètres.	Actual Pitch of Screw in Mètres.	Intended Fraction of Pitch.	Actual Fraction of Pitch.	Multiple of Gearing.	Mean Pressure in the Boiler in Centimètres of Mercury.	Proportion of Stroke made without Expansion.
1 A	16	1016·5	15th July, 1848	High	2·500	0·700	10·7895	1·680	4	2·880	3·040	0·375	0·360	5·091	...	30-100
2	16	1016·5	15th July, 1848	High	2·500	0·700	10·7895	1·680	4	2·880	3·040	0·375	0·360	5·091	29·19	30-100
3	16	1016·5	15th July, 1848	High	2·500	0·700	10·7895	1·680	4	2·880	3·040	0·375	0·360	5·091	28·34	30-100
4	16	1016·5	15th July, 1848	High	2·500	0·700	10·7895	1·680	4	2·880	3·040	0·375	0·360	5·091	29·94	30-100
5	16	1016·5	15th July, 1848	Medium	2·500	0·700	10·7895	1·680	4	2·880	3·040	0·375	0·360	5·091	23·38	70-100
6	16	1016·5	15th July, 1848	Medium	2·500	0·700	10·7895	1·680	4	2·880	3·040	0·375	0·360	5·991	22·82	70-100
7	16	1016·5	15th July, 1848	Medium	2·500	0·700	10·7895	1·680	4	2·880	3·040	0·375	0·360	5·091	20·67	70-100
8	16	1016·5	15th July, 1848	Medium	2·500	0·700	10·7895	1·680	4	2·880	3·040	0·375	0·360	5·091	20·77	70-100
9	16	1016·5	15th July, 1848	Low	2·500	0·700	10·7895	1·680	4	2 880	3·040	0·375	0·360	5·091	17·17	30-100
10	16	1016·5	15th July, 1848	Low	2·500	0·700	10·7895	1·680	4	2·880	3·040	0·375	0·360	5·091	16·54	30-100
11	16	1016·5	15th July, 1848	Low	2·500	0·700	10·7895	1·680	4	2·880	3·040	0·375	0·360	5·091	17·27	30-100
1	16	1016·5	1st Nov. 1848	High	2·510	0·70	10·3255	1·680	4	2·880	3·040	0·375	0·360	...	33·0	20-100
2	16	1016·5	1st Nov. 1848	High	2·510	0·70	10·3255	1·680	4	2·880	3·040	0·375	0·360	...	33·0	20-100
3	16	1016·5	1st Nov. 1848	High	2·510	0·70	10·3255	1·680	4	2·880	3·040	0·375	0·360	...	39·75	20-100
4	16	1016·5	1st Nov. 1848	Medium	2·510	0·70	10·3255	1·680	4	2·880	3·040	0·375	0·360	...	34·0	70-100
5	16	1016·5	1st Nov. 1848	Medium	2·510	0·70	10·3255	1·680	4	2·880	3·040	0·375	0·360	...	31·5	70-100
6	16	1016·5	1st Nov. 1848	Low	2·510	0·70	10·32·5	1·680	4	2·880	3·010	0·375	0·360	...	21·25	85-100
7	16	1016·5	1st Nov. 1848	Low	2·510	0·70	10·3255	1·680	4	2·880	3·040	0·375	0·360	...	19·0	85-100
8	16	1016·5	1st Nov. 1848	Low	2·510	0·70	10·3255	1·680	4	2·880	3·040	0·375	0·360	...	21·0	85-100
9	16	1016·5	1st Nov. 1848	Low	2·510	0·70	10·3255	1·680	4	2·880	3·040	0·375	0·360	...	20·0	85-100
10	16	1016·5	1st Nov. 1848	Medium	2·510	0·70	10·3255	1·680	4	2·880	3·040	0·375	0·360	...	16·0	70-100
11	16	1016·5	1st Nov. 1848	Medium	2·510	0·70	10·3255	1·680	4	2·880	3·040	0·375	0·360	...	13·0	70-100
12	16	1016·5	1st Nov. 1848	Medium	2·510	0·70	10·3255	1 680	4	2·880	3·040	0·375	0·360	...	14·5	70-100
1	16 bis	1016·5	27th July, 1848	High	2·500	0·700	10·1895	1·680	4	2·880	3·060	0·300	0·290	5·091	42·0	50-100
2	16 bis	1016·5	27th July, 1848	High	2·500	0·700	10·1895	1·680	4	2·880	3·060	0·300	0·290	5·091	45·0	50-100
3	16 bis	1016·5	27th July, 1848	High	2·500	0·700	10·1895	1·680	4	2·880	3·060	0·300	0·290	5·091	39·66	50-100
4	16 bis	1016·5	27th July, 1848	High	2·500	0·700	10·1895	1·680	4	2·880	3·060	0·300	0·290	5·091	33·0	50-100
5	16 bis	1016·5	27th July, 1848	High	2·500	0·700	10·1895	1·680	4	2·880	3·060	0·300	0·290	5·091	43·83	50-100
6	16 bis	1016·5	27th July, 1848	Medium	2·500	0·700	10·1895	1·680	4	2·880	3·060	0·300	0·290	5·091	13·75	...
7	16 bis	1016·5	27th July, 1848	Medium	2·500	0·700	10·1895	1·680	4	2·880	3·060	0·300	0·290	5·091	35·0	...
8	16 bis	1016·5	27th July, 1848	Medium	2·500	0·700	10·1895	1·680	4	2·880	3·060	0·300	0·290	5·091	17·5	...
9	16 bis	1016·5	27th July, 1848	Medium	2·500	0·700	10·1895	1·680	4	2·880	3·060	0·300	0·290	5·091	16·5	...
10	16 bis	1016·5	27th July, 1848	Low	2·500	0·700	10·1895	1·680	4	2·880	3·060	0·300	0·290	5·091	8·5	30-100
11	16 bis	1016·5	27th July, 1848	Low	2·500	0·700	10·1895	1·680	4	2·880	3·060	0·300	0·290	5·091	13·0	30-100
12	16 bis	1016·5	27th July, 1848	Low	2·500	0·700	10·1895	1 680	4	2·880	3·060	0·300	0·290	5·091	17·0	30-100
13	16 bis	1016·5	27th July, 1848	Low	2·500	0·700	10·1895	1·680	4	2·880	3·060	0·300	0·290	5·091	21·0	30-100
14	16 bis	1016·5	27th July, 1848	Low	2·500	0·700	10·1895	1·680	4	2·880	3·060	0·300	0·290	5·091	8·5	30-100
1 D	16 bis	1016·5	17th Nov. 1848	High	2·530	0·630	10·4615	1·680	4	2·880	3·060	0·300	0·290	5·091	49·0	50-100
2	16 bis	1016·5	17th Nov. 1848	High	2·530	0·630	10·4615	1·680	4	2·880	3·060	0·300	0·290	5·091	46·25	50-100
3	16 bis	1016·5	17th Nov. 1848	High	2·530	0·630	10·4615	1·680	4	2·880	3·060	0·300	0·290	5·091	45·125	50 100
4	16 bis	1016·5	17th Nov. 1848	High	2·530	0·630	10·4615	1·680	4	2·880	3·060	0·300	0·290	5·091	39·0	50-100
5	16 bis	1016·5	17th Nov. 1848	Medium	2·530	0·630	10·4615	1·680	4	2·880	3·060	0·300	0·290	5·091	28·0	70-100
6	16 bis	1016·5	17th Nov. 1848	Medium	2·530	0·630	10·4615	1·680	4	2·880	3·060	0·300	0·290	5·091	24·0	70-100
7	16 bis	1016·5	17th Nov. 1848	Medium	2·530	0·630	10·4615	1·680	4	2·880	3·060	0·300	0·290	5·091	31·5	70-100
8	16 bis	1016·5	17th Nov. 1848	Medium	2·530	0·630	10·4615	1·680	4	2·880	3·060	0·300	0·290	5·091	37·5	70-100
1 A	16 bis	1016·5	18th Nov. 1848	Medium	2·510	0·690	10·2575	1·680	4	2·880	3·060	0·300	0·290	5· 91	19·0	70-100
2	16 bis	1016·5	18th Nov. 1848	Medium	2·510	0·690	10·2575	1·680	4	2·880	3·060	0·300	0·290	5·091	28·5	70-100
3	16 bis	1016·5	18th Nov. 1848	Medium	2·510	0·690	10·2575	1·680	4	2·880	3·060	0 300	0·290	5·091	28·5	70-100
4	16 bis	1016·5	18th Nov. 1848	Medium	2·510	0·690	10·2575	1·680	4	2·880	3·060	0·300	0·290	5·091	25·0	70-100
5	16 bis	1016·5	18th Nov. 1848	Medium	2·510	0·690	10·2575	1·680	4	2·880	3·060	0·300	0·290	5·091	27·5	70-100
6	16 bis	1016·5	18th Nov. 1848	Medium	2·510	0·690	10·2575	1·680	4	2·880	3·060	0·300	0·290	5·091	26·5	70-100
7	16 bis	1016·5	18th Nov. 1848	Medium	2·510	0·690	10·2575	1·680	4	2·880	3·060	0·300	0·290	5·091	26·5	70-100
8	16 bis	1016·5	18th Nov. 1848	Medium	2·510	0·690	10·2575	1·680	4	2·880	3·060	0·300	0·290	5·091	25·0	70-100
1 D	19	1016·5	26th July, 1848	High	2·505	0·680	10·2235	1·680	4	3·513	3·455	0·750	0·770	5·091	41·83	30-100
2	19	1016·5	26th July, 1848	High	2·505	0·680	10·2235	1·680	4	3·513	3 455	0·750	0·770	5·091	47·83	30-100
3	19	1016·5	26th July, 1848	High	2·505	0·680	10·2235	1·680	4	3·513	3·455	0·750	0·770	5·091	44·66	30-100
4	19	1016·5	26th July, 1848	High	2·505	0·680	10·2235	1·680	4	3·513	3·455	0·750	0·770	5·091	38·17	30-100
5	19	1016·5	26th July, 1848	Medium	2·505	0·680	10·2235	1·680	4	3·513	3·455	0·750	0·770	5·091	41·0	70-100
6	19	1016·5	26th July, 1848	Medium	2·505	0·680	10·2235	1·680	4	3·513	3·455	0·750	0·770	5· 91	32·0	70-100
7	19	1016·5	26th July, 1848	Medium	2 505	0·680	10·2235	1·680	4	3·513	3·455	0·750	0·770	5·091	25·0	70-100
8	19	1016·5	26th July, 1848	Medium	2·505	0·680	10·2235	1·680	4	3·513	3·455	0·750	0·770	5·091	16·5	70-100
9	19	1016·5	26th July, 1848	Low	2·505	0·680	10·2235	1·680	4	3·513	3·455	0·750	0·770	5·091	16·0	30-100
10	19	1016·5	26th July, 1848	Low	2·505	0·680	10·2235	1·680	4	3·513	3·455	0·750	0·770	5·091	14·0	30-100
11	19	1016·5	26th July, 1848	Low	2·505	0·680	10·2235	1·680	4	3·513	3·455	0·750	0 770	5·091	13·0	30-100
1 A	19	1016·5	12th Dec. 1848	High	2·525	0·690	10·3593	1·680	4	3·513	3·455	0·750	0·770	5·091	31·0	20-100
2	19	1016·5	12th Dec. 1848	High	2·525	0 690	10·3593	1·680	4	3·513	3·455	0·750	0·770	5·091	34·75	20-100
3	19	1016·5	12th Dec. 1848	High	2·525	0·690	10·3593	1·680	4	3·513	3·455	0·750	0·770	5·091	35·0	20-100
4	19	1016·5	12th Dec. 1848	High	2·525	0·690	10·3593	1·680	4	3·513	3·455	0·750	0·770	5·091	26·0	20-100
5	19	1016·5	13th Dec. 1848	Medium	2·510	0·690	10·2575	1·680	4	3·513	3·455	0·750	0·770	5·091	32·5	70-100
6	19	1016 5	13th Dec. 1848	Medium	2·510	0·690	10·2575	1·680	4	3·513	3·455	0·750	0·770	5·091	29·0	70-100
7	19	1016·5	13th Dec. 1848	Medium	2·510	0·690	10·2575	1·680	4	3·513	3·455	0·750	0·770	5·091	30·5	70-100
8	19	1016·5	13th Dec. 1848	Medium	2·510	0·690	10·2575	1·680	4	3·513	3·455	0·750	0·770	5·091	28·0	70-100
1	19	1016·5	11th Dec. 1848	Low	2·535	0·690	10·4275	1·680	4	3·513	3·455	0·750	0·770	5·091	...	...
2	19	1016·5	11th Dec. 1848	Low	2·535	0·690	10·4275	1·680	4	3·513	3·455	0·750	0·770	5·091	...	...
1	19	1016·5	6th Jan. 1848	Low	2·535	0·700	10·4275	1·680	4	3·513	3·455	0·750	0·770	5·091	14·0	...
2	19	1016·5	6th Jan. 1848	Low	2·535	0·700	10·4275	1·680	4	3·513	3·455	0·750	0·770	5·091	12·0	...
3	19	1016·5	6th Jan. 1848	Low	2·535	0·700	10·4275	1·680	4	3·513	3·455	0·750	0·770	5·091	10·0	...
4	19	1016·5	6th Jan. 1848	Low	2·535	0·700	10·4275	1·680	4	3·513	3·455	0·750	0·770	5·091	8·0	...
5	19	1016·5	6th Jan. 1848	Medium	2·535	0·700	10·4275	1·680	4	3·513	3·455	0·750	0·770	5·091	37·0	...
6	19	1016·5	6th Jan. 1848	Medium	2·535	0·700	10·4275	1·680	4	3·513	3·455	0·750	0·770	5·091	43·0	...
7	19	1016·5	6th Jan. 1848	Medium	2·535	0·700	10·4275	1·680	4	3·513	3·455	0·750	0·770	5·091	35·0	...
8	19	1016·5	6th Jan. 1848	Medium	2·535	0·700	10·4275	1·680	4	3·513	3·455	0·750	0·770	5·091	38·0	...

SCREW STEAM PACKET "PELICAN" — *continued.*

mètre is 10·764 square feet; and a centimètre is 0·39371 English inches.)

Number of Turns of the Screw per Second.	Absolute Speed of the Vessel in Metres per Second.	Advance per Turn of the Screw in Mètres.	Mean Coefficient of Slip with Intended Pitch.	Mean Coefficient of Slip with Actual Pitch.	Mean Pressure in the Cylinders in Centimètres of Mercury.	Value of $\left(\frac{p}{r}\right)$ / n^2	Value of $\left(\frac{p-5}{r}\right)$ / n^2	Efficiency or Utilization with p.	Efficiency or Utilization with $(p-5)$.	Mean Speed of the Vessel in Knots.	Speed shown by the Log in Knots.	State of the Wind and Sea, and Remarks.	Number of the Run. A. ascending. D. descending.
2·596	6·179	...	0·3233	0·3592	73·60 71·40	2·1288	1·9797	K x 0·068870	K x 0·074059	9·5	...	Calm.	1A
2·474	3·592	1·935	0·3233	0·3592	66·40 64·40	2·0883	1·9270	K x 0·070209	K x 0·076084	9·5	...	Light airs from E.	2
2·405	5·893	1·962	0·3233	0·3592	...	...	...	...	...	9·5	...	Light airs from E.	3
2·541	3·902	...	0·3233	0·3592	70·0 7·8	2·0554	1·9037	K x 0·071334	K x 0·077014	9·5	...	Light airs from E.	4
1·984	5·186	...	0·2937	0·3309	46·30 44·0	2·2808	1·9684	K x 0·075207	K x 0·074851	7·5	...	Light airs from E.	5
1·937	2·946	2·040	0·2937	0·3309	42·7 40·3	2·0780	1·8206	K x 0·080358	K x 0·091729	7·5	...	Light airs from E.	6
1·754	4·449	2·029	0·2937	0·3309	41·8 39·4	2·5160	1·7449	K x 0·066384	K x 0·074302	7·5	...	Light airs from E.	7
1·762	2·781	...	0·2937	0·3309	36·5 34·4	2·2333	1·9087	K x 0·074959	K x 0·087506	7·5	...	Light airs from E.	8
1·457	3·548	...	0·2780	0·3164	...	...	...	...	...	5·5	...	Dead calm.	9
1·403	2·510	2·078	0·2780	0·3164	...	...	...	...	...	5·5	...	Dead calm.	10
1·465	3·344	...	0·2780	0·3164	...	...	...	...	...	5·5	...	Dead calm.	11
2·5012	5·495	...	0·3288	0·3641	69·24	2·1747	1·9915	K x 0·066770	K x 0·07288	9·5	9·0	Light airs from N.W.	1
2·5012	4·192	1·933	0·3288	0·3641	69·65	2·1896	2·0300	K x 0·066632	K x 0·07144	9·5	9·0	Light airs from N.W.	2
2·6130	5·679	...	0·3288	0·3641	74·86	2·1534	2·0106	K x 0·06736	K x 0·07218	9·5	10·0	Light airs from N.W.	3
2·145	3·598	...	0·3165	0·3523	59·97	2·3082	2·0222	K x 0·06641	K x 0·07316	8·1	8·5	Faint breeze from N.W.	4
2·119	4·795	1·969	0·3165	0·3523	50·80	2·2345	2·0150	K x 0·06867	K x 0·07600	8·1	8·0	Faint breeze from N.W.	5
1·732	3·493	...	0·3104	0·3467	40·60	2·4916	2·1653	K x 0·06388	K x 0·07353	6·5	6·0	Faint breeze from N.W.	6
1·710	3·311	1·994	0·3104	0·3467	35·80	2·4252	2·0891	K x 0·06564	K x 0·07619	6·5	6·3	Light breeze.	7
1·637	3·423	1·978	0·3104	0·3467	36·65	2·6284	2·3219	K x 0·05918	K x 0·06852	6·5	6·0	Pleasant breeze from N.W.	8
1·705	3·080	...	0·3104	0·3467	35·90	2·4404	2·0987	K x 0·06529	K x 0·07585	6·5	6·0	Pleasant breeze from N.W.	9
1·894	5·226	...	0·3090	0·3457	43·99	2·4090	2·1332	K x 0·06569	K x 0·07428	7·0	8·0	Strong breeze from N.N.W.	10
1·873	2·219	1·989	0·3090	0·3457	42·125	2·3220	2·0779	K x 0·06706	K x 0·07609	7·0	6·8	Strong breeze from N.N.W.	11
1·907	5·350	...	0·3090	0·3457	43·26	2·3339	2·0658	K x 0·06770	K x 0·07661	7·0	7·4	Light breeze from N.N.W.	12
2·608	6·275	...	0·3412	0·3810	63·90	1·8459	1·7004	K x 0·07526	K x 0·08073	9·4	10·0	Lt. breeze N.W.(fine weather).	1
2·571	3·400	1·865	0·3412	0·3810	61·50	1·8274	1·6790	K x 0·07593	K x 0·08270	9·4	9·4	Lt. breeze N.W.(fine weather).	2
2·624	6·275	1·904	0·2412	0·3810	65·60	1·8623	1·7202	K x 0·07456	K x 0·08077	9·4	10·0	Lt.breeze N.W.(fine weather).	3
2·508	3·510	1·914	0·3412	0·3810	60·90	1·9013	1·7058	K x 0·07303	K x 0·07956	9·4	9·5	Lt. breeze N.W.(fine weather).	4
2·624	5·946	...	0·3412	0·3810	67·20	1·9173	1·7347	K x 0·07242	K x 0·07883	9·4	9·5	Lt.breeze N.W.(fine weather).	5
1·977	3·118	...	0·3175	0·3624	40·50	1·9600	...	K x 0·07570	K x 0·08636	7·64	7·0	Faint breeze from N.W.	6
2·006	4·663	1·956	0·3175	0·3624	41·60	2·0120	1·7705	K x 0·07369	K x 0·08375	7·64	8·0	Faint breeze from W.	7
2·014	3·207	1·947	0·3175	0·3624	41·90	1·9857	1·7478	K x 0·07469	K x 0·08481	7·64	7·6	Faint breeze from W.	8
2·084	4·728	...	0·3175	0·3624	43·40	1·9322	1·7095	K x 0·07670	K x 0·08668	7·64	7·6	Faint breeze from S.W.	9
1·264	1·985	...	0·3232	0·3673	23·20	2·8539	2·2581	K x 0·05163	K x 0·06581	5·7	4·5	Light breeze from W.N.W.	10
1·638	3·517	1·925	0·3232	0·3673	29·10	2·1282	1·7625	K x 0·06921	K x 0·08356	5·7	7·0	Light breeze from W.N.W.	11
1·498	2·606	1·932	0·3232	0·3673	26·90	2·2996	1·9199	K x 0·06249	K x 0·07675	5·7	4·8	Light breeze from W.N.W.	12
1·645	3·400	1·915	0·3232	0·3673	27·80	2·0180	1·6507	K x 0·07306	K x 0·08907	5·7	7·0	Light breeze from W.N.W.	13
1·419	2·707	...	0·3232	0·3673	25·10	2·4491	1·9614	K x 0·06016	K x 0·07512	5·7	5·2	Light breeze from W.N.W.	14
2·781	5·711	...	0·35435	0·3880	78·32	1·9915	1·8636	K x 0·06511	K x 0·06955	10·0	9·4	Pleasant breeze from W.S.W.	1 D
2·816	4·642	1·860	0·35435	0·3880	78·41	1·9378	1·8177	K x 0·06663	K x 0·07117	10·0	9·6	Pleasant breeze from W.S.W.	2
2·755	5·775	1·859	0·35435	0·3880	77·05	2·0891	1·8661	K x 0·06481	K x 0·06930	10·0	9·0	Pleasant breeze from W.S.W.	3
2·708	4·325	...	0·35435	0·3880	72·937	1·9432	1·8092	K x 0·06673	K x 0·07164	10·0	9·5	Light breeze from W.S.W.	4
2·235	5·160	...	0·3542	0·3921	53·92	2·971	1·9026	K x 0·06216	K x 0·06851	8·1	6·4	Strong breeze from W.N.W.	5
2·203	3·043	1·856	0·3542	0·3921	49·25	1·9756	1·7739	K x 0·06601	K x 0·07314	8·1	8·0	Pleasant gale from W.N.W.	6
2·226	5·213	1·864	0·3542	0·3921	52·82	2·0935	1·9295	K x 0·06228	K x 0·06879	8·1	7·6	Pleas. gale W.N.W.(chop.sea).	7
2·310	3·237	...	0·3542	0·3921	54·45	2·0076	1·8225	K x 0·06513	K x 0·07171	8·1	8·0	Strong breeze from W.N.W.	8
2·084	4·728	...	0·3444	0·3830	45·85	2·0763	1·8497	K x 0·06554	K x 0·07355	7·9	7·6	Light breeze from W.N.W.	1 A
2·132	3·316	1·895	0·3444	0·3830	49·26	2·1298	1·9133	K x 0·06388	K x 0·07109	7·9	7·0	Light breeze from W.N.W.	2
2·214	4·864	1·881	0·3444	0·3830	39·60	1·9871	1·7879	K x 0·06684	K x 0·07612	7·9	7·3	The breeze freshens a little.	3
2·123	3·290	...	0·3444	0·3830	48·76	2·1282	1·9092	K x 0·06398	K x 0·07128	7·9	7·4	Pleasant breeze from W.N.W.	4
2·228	4·829	...	0·3463	0·3850	50·12	2·0225	1·8201	K x 0·06637	K x 0·07040	8·0	8·0	Strong br. W.N.W.(wind aft).	5
2·164	3·542	1·888	0·3463	0·3850	50·72	2·1265	1·9173	K x 0·06308	K x 0·06999	8·0	7·5	Ditto (chopping sea).	6
2·181	4·579	1·877	0·3463	0·3850	48·60	2·0046	1·7997	K x 0·06697	K x 0·07458	8·0	7·8	The breeze slackens a little.	7
2·096	3·487	...	0·3463	0·3850	49·25	2·1861	1·9643	K x 0·06136	K x 0·06829	8·0	7·6	Light breeze from W.N.W.	8
1·996	3·377	...	0·3585	0·3322	75·5	3·7336	3·4769	K x 0·06259	K x 0·06703	8·85	9·0	Strong breeze, S. W. (smooth water).	1 D
2·101	5·727	2·236	0·3585	0·3322	78·2	3·4610	3·2604	K x 0·06691	K x 0·07148	8·85	9·4	Ditto ditto (wind aft).	2
1·954	3·499	2·271	0·3585	0·3322	76·8	3·9506	3·6934	K x 0·05901	K x 0·06312	8·85	9·0	Ditto ditto.	3
1·987	5·456	...	0·3585	0·3322	69·2	3·4415	3·1935	K x 0·06772	K x 0·07299	8·85	9·0	Ditto ditto.	4
1·641	2·800	...	0·3375	0·3115	56·2	4·3467	3·6485	K x 0·06547	K x 0·07186	7·1	7·0	Ditto ditto.	5
1·626	4·739	2·327	0·3375	0·3115	...	...	...	...	...	7·1	7·8	Ditto ditto.	6
1·489	2·580	2·330	0·3375	0·3115	44·70	3·9823	3·5369	K x 0·06319	K x 0·07115	7·1	6·2	The breeze freshens with the flood tide.	7
1·532	4·401	...	0·3375	0·3115	44·0	3·7054	3·2840	K x 0·06789	K x 0·07659	7·1	7·0	Ditto ditto.	8
1·105	1·858	...	0·345	0·3190	29·7	4·9533	3·9748	K x 0·05382	K x 0·06472	4·6	4·6	Pleasant gale, W. S. W.	9
1·099	3·147	2·301	0·345	0·3190	24·9	4·0199	3·2128	K x 0·06358	K x 0·08006	4·6	5·0	Pleasant gale, W. S. W.	10
0·988	1·721	...	0·345	0·3190	28·3	5·9369	4·6838	K x 0·04522	K x 0·05493	4·6	3·8	Pleasant gale, W. S. W.	11
2·036	3·227	...	0·3513	0·3251	78·46	3·7186	3·4822	K x 0·06413	K x 0·06850	9·1	9·0	Faint br. S.S.W. (wind ahead).	1 A
2·063	5·974	2·279	0·3513	0·3251	79·525	3·6701	3·4474	K x 0·06496	K x 0·06932	9·1	8·6	Faint br. S.S.W.(wind ahead).	2
2·085	3·605	...	0·3513	0·3251	87·725	3·7130	3·4889	K x 0·06421	K x 0·06835	9·1	8·8	Faint br. S.S.W. (wind ahead)	3
2·062	...	...	0·3513	0·3251	85·625	3·7700	3·5391	K x 0·06324	K x 0·06651	9·1	...	Faint br. S.S.W. (wind ahead).	4
1·712	2·580	...	0·3251	0·2982	59·50	3·9858	3·6499	K x 0·06461	K x 0·07501	7·6	6·8	Light airs fr. E. (wind ahead).	5
1·664	5·386	2·356	0·3251	0·2982	54·20	3·8454	3·4907	K x 0·07123	K x 0·07846	7·6	6·8	Light airs fr. E. (wind ahead).	6
1·700	2·627	2·386	0·3251	0·2982	56·125	3·8132	3·4751	K x 0·07180	K x 0·07822	7·6	7·0	Light airs fr. E. (wind ahead).	7
1·651	5·436	...	0·3251	0·2982	34·45	3 9188	3·4685	K x 0·06989	K x 0·07696	7·6	7·5	Light airs fr. E. (wind ahead).	8
1·287	...	...	...	...	26·70	4·7367	4·0837	K x 0·06154	K x 0·06959	...	...	Lt. airs S.(current favourable).	1
1·215	...	...	...	...	35·887	3·7899	4·1244	K x 0·06096	K x 0·06890	...	...	Light airs S. (current adverse).	2
1·348	...	...	...	...	25·535	4·6694	3·7088	K x 0·06218	K x 0·07726	...	...	Light airs from S.W.	1
1·326	...	...	...	...	24·125	4·4837	3·5570	K x 0·06391	K x 0·08065	...	...	Calm.	2
1·304	...	...	...	...	24·925	4·7666	3·8053	K x 0·06012	K x 0·07531	...	...	Calm.	3
1·312	...	...	...	...	25·63	4·4606	3·5199	K x 0·06424	K x 0·08143	...	...	Calm.	4
1·711	3·080	...	0·3253	0·3049	35·50	3·9326	3·3754	K x 0·06612	K x 0·07702	8·1	9·3	Calm.	5
1·794	5·020	2·337	0·3253	0·3049	37·94	3·8520	3·3140	K x 0·07066	K x 0·08072	8·1	8·0	Calm.	6
1·744	3·344	2·368	0·3253	0·3049	36·50	4·0059	3·4580	K x 0·06735	K x 0·07814	8·1	7·6	Calm.	7
1·774	5·007	...	0·3253	0·3049	37·20	3·9649	3·4325	K x 0·06805	K x 0·07862	8·1	7·2	Calm.	8

RESULT OF EXPERIMENTS MADE WITH THE FRENCH

(A mètre is 39·37079 English inches, or 3·2808 English feet; a square

Number of the Run. A. ascending, D. descending	Numbers of the Series in Table IV.	Length of each Run in Mètres.	Date of Experiment.	High Speed, Medium Speed, or Low Speed.	Mean Draught of Water in Mètres.	Difference of Draught at Bow and Stern in Mètres.	Area of Immerged Midship Section in Square Mètres.	Diameter of Screw in Mètres.	Number of Blades of Screw.	Intended Pitch of Screw in Mètres.	Actual Pitch of Screw in Mètres.	Intended Fraction of Pitch.	Actual Fraction of Pitch.	Multiple of Gearing.	Mean Pressure in the Boiler in Centimetres of Mercury.	Proportion of Stroke made without Expansion.
9 A	19	1016·5	6th Jan. 1848	High	2·535	0·700	10·4275	1·680	4	3·513	3·455	0·750	0·770	5·091	15·0	50-100
10	19	1016·5	6th Jan. 1848	High	2·535	0·700	10·4275	1·680	4	3·513	3·455	0·750	0·770	5·091	14·0	50-100
11	19	1016·5	6th Jan. 1848	High	2·535	0·700	10·4275	1·680	4	3·513	3·455	0·750	0·770	5·091	19·0	50-100
12	19	1016·5	6th Jan. 1848	High	2·535	0·700	10·4275	1·680	4	3·513	3·455	0·750	0·770	5·091	161·0	50-100
1	20	1016·5	7th Aug. 1848	High	2·502	0·695	10·2019	1·680	4	3·513	3·553	0·600	0 625	4·00	38·5	30-100
2	20	1016·5	7th Aug. 1848	High	2·502	0·695	10·2019	1·680	4	3·513	3·553	0·600	0·625	4·00	36·17	30-100
3	20	1016·5	7th Aug. 1848	High	2·502	0·695	10·2019	1·680	4	3·513	3·553	0·600	0·625	4·00	40·65	30-100
4	20	1016·5	7th Aug. 1848	High	2·502	0·695	10·2019	1 680	4	3·513	3·553	0·600	0·625	4·00	36·0	30-100
5	20	1016·5	7th Aug. 1848	Medium	2·502	0·695	10·2019	1·680	4	3·513	3·553	0·600	0·625	4·00	25·5	70-100
6	20	1016·5	7th Aug. 1848	Medium	2·502	0·695	10·2019	1·680	4	3·513	3·553	0·600	0·625	4·00	22·0	70-100
7	20	1016·5	7th Aug. 1848	Medium	2·502	0·695	10·2019	1·680	4	3·513	3·553	0 600	0·625	4·00	24·5	70-100
8	20	1016·5	7th Aug. 1848	Medium	2·502	0·695	10·2019	1·680	4	3·513	3·553	0·600	0·625	4·00	2·5	70-100
9	20	1016·5	7th Aug. 1848	Low	2·502	0·695	10·2019	1·680	4	3·513	3·553	0·600	0·625	4·00	10·75	70-100
10	20	1016·5	7th Aug. 1848	Low	2·502	0·695	10·2019	1·680	4	3·513	3·553	0·600	0·625	4·00	7·5	70-100
11	20	1016·5	7th Aug. 1848	Low	2·502	0·695	10·2019	1·680	4	3·513	3·553	0 600	0·625	4·00	7·5	70-100
12	20	1016·5	7th Aug. 1848	Low	2·502	0·695	10·2019	1·680	4	3·513	3·553	0·600	0·625	4·00	7·0	70-100
1 D	21	1016·5	21st Oct. 1848	High	2·500	0·780	10·1897	1·680	4	3·513	3·531	0·450	0·453	5·091	32·75	20-100
2	21	1016·5	21st Oct. 1848	High	2·500	0·780	10·1897	1·680	4	3·513	3·531	0·450	0·453	5·091	32·15	20-100
3	21	1016·5	21st Oct. 1848	High	2·500	0·780	10·1897	1·680	4	3·513	3·531	0·450	0·453	5·091	29·875	20-100
4	21	1016·5	21st Oct. 1848	High	2·500	0·780	10·1897	1·680	4	3·513	3 531	0·450	0·453	5·091	28·15	20-100
5	21	1016·5	21st Oct. 1848	Medium	2·500	0·700	10·1897	1·680	4	3·513	3·531	0·450	0·453	5·091	34·0	70-100
6	21	1016·5	21st Oct. 1848	Medium	2·500	0·780	10·1897	1·680	4	3·513	3·531	0·450	0·453	5·091	30·5	70-100
7	21	1016·5	21st Oct. 1848	Medium	2·500	0·780	10·1897	1·680	4	3·513	3·531	0·450	0·453	5·091	31·0	70-100
8	21	1016·5	21st Oct. 1848	Medium	2·500	0·780	10·1897	1·680	4	3·513	3·531	0·450	0·453	5·091	30·5	70-100
9	21	1016·5	21st Oct. 1848	Low	2·500	0·780	10·1897	1·680	4	3·513	3·531	0·450	0·453	5·091	10·5	85-100
10	21	1016·5	21st Oct. 1848	Low	2·500	0·780	10·1897	1·680	4	3·513	3·531	0·450	0·453	5·091	5·5	85-100
11	21	1016·5	21st Oct. 1848	Low	2·500	0·780	10 1897	1·680	4	3·513	3·531	0·450	0·453	5·091	8·5	85-100
12	21	1016.5	21st Oct. 1848	Low	3·500	0·780	10·1897	1·680	4	3·513	3·531	0·450	0·453	5·091	9·4	85-100
1	22	1016·5	29th Oct. 1848	High	2·510	0·730	10·2575	1·680	4	3·513	3·526	0·375	0·370	...	26·5	20-100
2	22	1016·5	29th Oct. 1848	High	2·510	0·730	10·2575	1·680	4	3·513	3·526	0·375	0·370	...	28·0	20-100
3	22	1016·5	29th Oct. 1848	High	2·510	0·730	10·2575	1·680	4	3·513	3·526	0·375	0·370	...	30·0	20-100
4	22	1016·5	29th Oct. 1848	High	2·510	0·730	10·2575	1·680	4	3·513	3·526	0·375	0·370	...	23·0	20-100
5	22	1016·5	29th Oct. 1848	Medium	2·510	0·730	10·257	1·680	4	3·513	3·526	0·375	0·370	...	15·5	70-100
6	22	1016·5	29th Oct. 1848	Medium	2·510	0·730	10·2575	1·680	4	3·513	3·526	0·375	0·370	...	17·0	70 100
7	22	1016·5	29th Oct. 1848	Medium	2·510	0·730	10·2575	1·680	4	3·513	3·526	0·375	0·370	...	16·0	70-100
8	22	1016·5	29th Oct. 1848	Medium	2·510	0·730	10·2575	1·680	4	3·513	3·526	0 375	0 370	...	29·0	70-100
1 A	22	1016·5	30th Oct. 1848	High	2·205	0·760	10·2235	1·680	4	3·513	3·526	0·375	0·370	...	44·5	20-100
2	22	1016·5	30th Oct. 1848	High	2·205	0·760	10·2235	1·680	4	3·513	3·526	0·375	0·370	...	32·5	20-100
3	22	1016·5	30th Oct. 1848	High	2·205	0·760	10·2235	1·680	4	3·513	3·526	0·375	0·370.	...	28·5	20-100
4	22	1016·5	30th Oct. 1848	High	2·205	0·760	10·2235	1·680	4	3·513	3·526	0·375	0·370	...	34·0	20-100
5	22	1016·5	30th Oct. 1848	High	2·205	0·760	10·2235	1·680	4	3·513	3·526	0·375	0·370	...	36·0	20-100
6	22	1016·5	30th Oct. 1848	Medium	2·205	0·760	10·2235	1·680	4	3·513	3·526	0·375	0·370	...	42·5	70-100
7	22	1016·5	30th Oct. 1848	Medium	2·205	0·760	10·2235	1·680	4	3·513	3·526	0·375	0·370	...	38·5	70-100
8	22	1016·5	30th Oct. 1848	Medium	2·205	0·760	10·2235	1·680	4	3·513	3·526	0·375	0·370	...	36·5	70-100
9	22	1016·5	30th Oct. 1848	Low	2·205	0·760	10·2235	1·680	4	3·513	3·526	0·375	0 370	...	33·0	85-100
10	22	1016·5	30th Oct. 1248	Low	2·2 5	0·760	10·2235	1·680	4	3·513	3·526	0·375	0·370	...	35·5	85-100
11	22	1016·5	30th Oct. 1848	Low	2·205	0·760	10·2235	1·680	4	3·513	3·526	0·375	0·370	...	11·5	85-100
1 D	22 bis	1016·5	9th Nov. 1848	High	2·520	0·760	10·3255	1·680	4	3·513	3·575	0·30	0·285	5·091	38·375	20-100
2	22 bis	1016·5	9th Nov. 1848	High	2·520	0·760	10·3255	1·680	4	3·513	3·575	0·30	0 285	5·091	42·5	20-100
3	22 bis	1016·5	9th Nov. 1848	High	2·520	0·760	10·3255	1·680	4	3·513	3·575	0·30	0·285	5·091	46·125	20-100
4	22 bis	1016·5	9th Nov. 1848	High	2·520	0·760	10·3255	1·680	4	3·513	3·575	0·30	0·285	5·091	56·75	20-100
5	22 bis	1016·5	9th Nov. 1848	High	2·520	0·760	10·3255	1·680	4	3·513	3·575	0·30	0·285	5·091	35·375	20-100
6	22 bis	1016·5	9th Nov. 1848	Medium	2·520	0·760	10·3255	1·680	4	3·513	3·575	0·30	0·285	5·021	29·5	70-100
7	22 bis	1016·5	9th Nov. 1848	Medium	2·520	0·760	10·3255	1·680	4	3·513	3·575	0·30	0·285	5·091	37·5	70-100
8	22 bis	1016·5	9th Nov. 1848	Medium	2·520	0·760	10·3255	1·680	4	3·513	3·575	0·30	0·285	5·091	30·0	70-100
9	22 bis	1016·5	9th Nov. 1848	Medium	2·520	0·760	10·3255	1 680	4	3·513	3·575	0·30	0·285	5·091	27·0	70-100
10	22 bis	1016·5	9th Nov. 1848	Low	2·520	0·760	10·3255	1·680	4	3·513	3·575	0·30	0·285	5 091	25·0	85-100
11	22 bis	1016·5	9th Nov. 1848	Low	2·520	0·760	10·3255	1·680	4	3·513	3·575	0·30	0·285	5·091	62·5	85-100
12	22 bis	1016·5	9th Nov. 1848	Low	2·520	0·760	10·3255	1·680	4	3·513	3·575	0·30	0·285	5·091	27·5	85-100
13	22 bis	1016·5	9th Nov. 1848	Low	2·520	0·760	10·3255	1·680	4	3·513	3·575	0·30	0·285	5·091	29·0	85-100
1	25	1016·5	9th Oct. 1848	High	2·525	0·750	10·3595	1·680	4	2·608	2·625	0·750	0 740	5·091	31·5	20-100
2	25	1016·5	9th Oct. 1848	High	2·525	0·750	10·3595	1·680	4	2·608	2·625	0·750	0·740	5·091	37·0	20-100
3	25	1016·5	9th Oct. 1848	High	2·525	0·750	10·3595	1·680	4	2·608	2·625	0·750	0·740	5·091	37·0	20-100
4	25	1016·5	9th Oct. 1848	High	2·525	0·750	10·3595	1·680	4	2·608	2·625	0·750	0·740	5·091	41·0	20-100
5	25	1016·5	9th Oct. 1848	Low	2·525	0·750	10·3595	1·680	4	2·608	2·625	0·750	0·740	5·091	13·5	35-100
6	25	1016·5	9th Oct. 1848	Low	2 525	0·750	10·3595	1·680	4	2·608	2·625	0·750	0·740	5·091	11·0	35-100
7	25	1016·5	9th Oct. 1848	Low	2·525	0·750	10·3595	1·680	4	2·608	2·625	0·750	0·740	5 091	12·0	35-100
8	25	1016·5	9th Oct. 1848	Low	2·525	0·750	10·3595	1·680	4	2·608	2·625	0·750	0·740	5·091	9·0	35-100
9	25	1016·5	9th Oct. 1848	Medium	2·525	0·750	10·3595	1·680	4	2·608	2·625	0·750	0·740	5·091	35·5	70-100
10	25	1016·5	9th Oct. 1848	Medium	2·525	0·750	10·3595	1·680	4	2·608	2·625	0·750	0·740	5·091	41·0	70-100
11	25	1016·5	9th Oct. 1848	Medium	2·525	0·750	10·3595	1·680	4	2·608	2·625	0·750	0·740	5·091	33·5	70-100
12	25	1016·5	9th Oct. 1848	Medium	2·525	0·750	10·3594	1·680	4	2·608	2·625	0·750	0·740	5·091	26·0	70-100
1 A	26	1016·5	20th Oct. 1848	Medium	2·490	0·760	10·1555	1·680	4	2·608	2·621	0·600	0·600	5·091	6·5	70-100
2	26	1016·5	20th Oct. 1848	Medium	2·490	0·760	10·1555	1·680	4	2·608	2·621	0 600	0·600	5·091	9·5	70-100
3	26	1016·5	20th Oct. 1848	Medium	2·490	0·760	10·1555	1·680	4	2·608	2·621	0·600	0·600	5·091	14·0	70-100
4	26	1016·5	20th Oct. 1848	Medium	2·490	0·760	10·1 55	1·680	4	2·608	2·621	0·600	0·600	5·091	13·5	70-100
5	26	1016·5	20th Oct. 1848	Medium	2·490	0·760	10·1555	1·680	4	2·608	2·621	0·600	0·600	5·091	19·0	70-100
6	26	1016·5	20th Oct. 1848	Low	2·490	0·760	10·1555	1·680	4	2·608	2·621	0·60.0	0·600	5·091	8·0	88-100
7	26	1016·5	20th Oct. 1848	Low	2·490	0·760	10·1555	1·680	4	2·608	2·621	0·600	0·600	5·091	9·0	88-100
8	26	1016·5	20th Oct. 1848	Low	2·490	0·760	10·1555	1·680	4	2·608	2·621	0·600	0·600	5·091	9·5	88-100
9	26	1016·5	20th Oct. 1848	Low	2·490	0·760	10·1555	1·680	4	2·608	2·621	0 600	0·600	5·091	10·0	88-100
10	26	1016·5	20th Oct. 1848	High	2·490	0·760	10·1555	1·680	4	2·608	2·621	0·600	0·600	5·091	46·0	70-100
11	26	1016·5	20th Oct. 1848	High	2·490	0·760	10·1555	1·680	4	2·608	2·621	0·600	0·600	5·091	47·0	70-100
12	26	1016·5	20th Oct. 1848	High	2·490	0·760	10·1555	1·680	4	2·608	2·621	0·600	0·600	5·091	29·25	70-100
13	26	1016·5	20th Oct. 1848	High	2·490	0·760	10·1555	1·680	4	2·608	2·621	0·600	0·600	5·091	30·0	70-100

SCREW STEAM PACKET "PELICAN"—*continued.*

mètre is 10·764 square feet; and a centimètre is 0·39371 English inches.)

Number of Turns of the Screw per Second.	Absolute Speed of the Vessel in Mètres per Second.	Advance per Turn of the Screw in Mètres.	Mean Coefficient of Slip with Intended Pitch.	Mean Coefficient of Slip with Actual Pitch.	Mean Pressure in the Cylinders in Centimètres of Mercury.	Value of $\left(\frac{p}{r}\right)$ n^2	Value of $\left(\frac{p-5}{r}\right)$ n^2	Efficiency or Utilization with p.	Efficiency or Utilization with $(p-5)$.	Mean Speed of the Vessel in Knots.	Speed shown by the Log in Knots.	State of the Wind and Sea, and Remarks.	Number of the Run. A ascending, D descending.
2·014	...	...	...	...	49·775	3·9655	3·5628	K × 0·06063	K × 0·06749	...	...	Light airs N.W. (wind ahead).	9 A
1·996	...	...	...	...	49·50	4·0616	3·6507	K × 0·05920	K × 0·06585	...	...	Light airs N.W. (current adv.)	10
2 073	...	...	...	...	50·19	4·1480	3·4168	K × 0·06331	K × 0·07036	...	...	Light airs N.W. (wind astern).	11
2·014	...	...	...	...	49·0	3·9500	3·5467	K × 0·06098	K × 0·06780	...	...	Light airs N.W. (wind astern).	12
2·193	5·601	...	0·353	0·360	62·2	3 3387	3·0775	K × 0·07017	K × 0·07610	9·8	9·8	Faint breeze from E (fine weather).	1
2·178	4·307	2·271	0·353	0·360	62·4	3·2906	3·0274	K × 0·07118	K × 0·07738	9·8	9·8	Ditto.	2
2·219	5·695	2·278	0·353	0·360	67·1	3·4081	2·9857	K × 0·06874	K × 0·07428	9·8	9·8	Ditto.	3
2·206	4·372	...	0·353	0·360	63·9	3·3572	3·0241	K × 0 07139	K × 0 07745	9·8	10·3	Ditto.	4
1·741	4·621	...	0·324	0·3313	43·4	3·5431	3·1345	K × 0·07594	K × 0·08583	7·9	7·4	Light airs from E.	5
1·688	3·548	2·369	0·324	0·3313	38·7	3·4145	2·9738	K × 0·07880	K × 0·09049	7·9	7·4	Faint breeze from E.	6
1·724	4·488	2·383	0·324	0·3313	40·6	3·4070	2·9880	K × 0·07877	K × 0·08983	7·9	8·0	Faint breeze from E.	7
1·674	3·703	...	0·324	0·3313	38·3	3·4194	2·9731	K × 0·07866	K × 0·09047	7·9	7·8	Almost calm.	8
1·358	3·460	...	0·316	0·3325	25·6	3·4744	2·7957	K × 0·07837	K × 0 09737	5·85	6·0	Dead calm.	9
1·221	2·816	2·303	0·316	0·3325	21·2	3·8981	3 1530	K × 0·07080	K × 0·08833	5·85	5·5	Light airs from N.W.	10
1·244	3·039	2·412	0·316	0·3325	24·0	3·9443	3·1214	K × 0·07067	K × 0·08927	5·85	5·8	Light airs from N.W.	11
1·207	2·904	...	0·316	0·3325	24·5	4·2040	3·1223	K × 0·06527	K × 0·08007	5·85	5·3	Light airs from E.S.E.	12
2·113	3·779	...	0·3655	0·3687	75·025	3·5993	3·0621	K × 0·06687	K × 0 07164	9·15	8·8	Faint breeze from N.W. (wind and tide adverse, fine weather).	1 D
2·140	5·632	2·225	0·3655	0·3687	72·85	3·1614	3·0150	K × 0·06207	K × 0·07307	9·15	9·4	Ditto.	2
2 099	3·851	2·233	0·3655	0·3687	74·35	3·3171	3·3103	K × 0·06661	K × 0·07141	9·15	8·6	Ditto.	3
2·080	5·465	...	0·3655	0·3687	68·762	3·1567	2·9305	K × 0·06983	K × 0·07529	9·15	9·0	Ditto.	4
1·810	3·366	...	0·3497	0·3531	58·118	3·4151	3·1216	K × 0·06859	K × 0·07520	7·8	7·8	Light airs.	5
1·751	4·663	2·278	0·3497	0·3531	58·85	3·4074	3·0864	K × 0·06995	K × 0·07724	7·8	7·8	Light airs.	6
1·763	4·423	2·291	0·3497	0·3531	53·25	3·3679	3·0518	K × 0·06976	K × 0·07698	7·8	7·0	Light airs.	7
1·754	4·600	...	0·3497	0·3531	52·925	3·3812	3·0655	K × 0·07040	K × 0·07771	7·8	7·0	Light airs.	8
1·440	3·007	...	0·3360	0·3381	37·975	3·5970	3·1252	K × 0 06990	K × 0·08045	6·4	6·0	Calm.	9
1·424	3·650	2·332	0·3360	0·3381	36·075	3·5746	3·0821	K × 0·07080	K × 0·08215	6·4	6·3	Calm.	10
1·391	2·935	2·343	0·3360	0·3381	35·575	3·6661	3·1565	K × 0·06949	K × 0·08081	6·4	6·0	Calm.	11
1·427	3·670	...	0·3360	0·3381	37·037	...	...	...	...	6·4	5·8	Calm.	12
1·986	3·062	...	0·3835	0·3860	67·737	3·3783	3·1432	K × 0·06168	K × 0·06660	8·3	8·0	Light breezes S.W. (rainy).	1
2·002	5·601	2·174	0·3835	0·3860	66·35	...	3·1468	K × 0·06131	K × 0·06634	8·3	...	Pleasant breeze (apparent wind abeam).	2
2·002	3·109	2·157	0·3835	0·3860	68·325	3·3704	3·1245	K × 0·06191	K × 0·06681	8·3	8·4	Ditto.	3
1·940	5·322	...	0·3835	0·3860	63·56	3·3203	3·0621	K × 0·06288	K × 0·06824	8·3	7·8	Pleasant breeze W.S.W.	4
1·519	2·310	...	0 3649	0·3672	43·875	3·6964	3·2752	K × 0·06013	K × 0·06686	6·8	6·0	Strong breeze from S.W.	5
1·553	4·381	2·233	0·3649	0·3672	42·625	3·4897	3·0793	K × 0·06363	K × 0·07209	6·8	6·3	Pleasant breeze from W.S.W.	6
1·561	2·744	8·229	0·3649	0·3672	44·50	3·5474	3·1468	K × 0·06239	K × 0·07029	6·8	6·4	Pleasant breeze from W.S.W.	7
1·689	4·316	...	0·3649	0·3672	49·45	3·4623	3·1109	K × 0·06378	K × 0·07095	6·8	7·0	Light breeze.	8
2·198	5·940	...	0·3787	0·3815	78·47	3·1929	2·9915	K × 0·06493	K × 0·06935	9·0	10·0	Faint breeze from S.W.	1 A
2·084	3·400	2·1845	0·3787	0·3815	71·525	...	3·0081	K × 0 06424	K × 0·06907	9·0	9·4	Light breeze from S.W.	2
2·052	3·679	2·187	0 3787	0·3815	68·400	3·1263	2·9656	K × 0 06657	K × 0·07181	9·0	9·0	Faint breeze from S.W.	3
2·116	3·406	2·171	0·3787	0·3815	73·675	3·22223	2·9948	K × 0·06447	K × 0·06936	9·0	8·8	Faint breeze from S.W.	4
2·177	5·876	...	0·3787	0·3815	75·91	3·1847	2·9753	K × 0·06333	K × 0·06780	9·0	9·8	Faint breeze from S.W.	5
1·857	2·964	...	0·3707	0·3730	59·26	3·3624	3·0752	K × 0·06391	K × 0·06983	7·9	8·0	Light breeze from S.W.	6
1·861	5·16	2·211	0·3707	0·3730	58·91	3·2585	2·9686	K × 0·06595	K × 0·07235	7·9	8·5	Light breeze from S.W.	7
1·798	3·025	...	0·3707	0·3730	57·70	3·3625	3·0724	K × 0·06391	K × 0·06991	7·9	8·0	Light breeze from S.W.	8
1·482	2·740	...	0·3529	0·3554	45·2	3·6247	3·1762	K × 0·06291	K × 0·07177	6·3	6·0	Light airs from S.W.	9
1·498	3·910	2·273	0·3529	0·3554	40·3	3·5159	3·0828	K × 0·06645	K × 0·07578	6·3	6·0	Light airs from S.W.	10
1·288	2·547	...	0·3529	0·3554	32·0	3·8781	3·2832	K × 0·06034	K × 0·0711	6·3	5·8	Almost calm.	11
2·022	5·711	...	0·4039	0·4148	76·1	3·0811	2·8185	K × 0·06632	K × 0·06456	9·2	8·5	Pleasant breeze N.N.E.(chop.)	1 D
2·227	3·650	2·086	0·4039	0·4148	79·0	3·0124	2·8214	K × 0·06169	K × 0·06586	9·2	8·8	Pleasant breeze N.N.E.(chop.)	2
2·281	5·876	2·099	0·4039	0·4148	20·7	2·9834	2·8568	K × 0·06698	K × 0·06501	9·2	8·0	Pleasant breeze N.N.E.(chop.)	3
2·224	3·643	2·092	0·4039	0·4148	76·2	3·0230	2·8214	K × 0·06140	K × 0·06571	9·2	9·0	Light breeze from N.N.E.	4
2·155	5·421	...	0·4039	0·4148	73·6	3·1127	2·8994	K × 0·05971	K × 0·06407	9·2	8·8	Light breeze from N.N.E.	5
1·790	3·048	...	0·3915	0·4022	52·5	3·2166	2·9097	K × 0·06067	K × 0·06705	7·5	7·3	Strong breeze N.N.E.(abeam).	6
1·810	4·589	2·141	0·3915	0·4022	55·0	3·2982	2·9981	K × 0·05919	K × 0·06511	7·5	7·0	Pleasant breeze from N.E.	7
1·729	3·207	2·134	0·3915	0·4022	51·9	3·2109	2·8994	K × 0·06079	K × 0·06727	7·5	7·6	Pleasant breeze from N.E.	8
1·759	4·289	...	0·2915	0·4022	51·3	3·2577	2·9368	K × 0·05993	K × 0·06640	7·5	6·5	Pleasant breeze from N.E.	9
1·518	3·039	...	0·3907	0·4011	40·1	3·4531	3·0214	K × 0·05759	K × 0·06579	6·3	6·2	Light breeze from N.N.E.	10
1·487	3·258	2·147	0·3907	0·4011	40·1	3·5641	3·7180	K × 0·05779	K × 0·06374	6·3	5·3	Light breeze from N.N.E.	11
1·533	3·382	2·135	0·3907	0·4011	40·5	3·44·8	3·0214	K × 0·05766	K × 0·06579	6·3	6·2	Light breeze from N.N.E.	12
1·465	2·822	...	0·3907	0·4011	40·1	3·6691	3·2098	K × 0·05422	K × 0·06155	6·3	5·3	Pleasant breeze (a little sea).	13
2·528	3·955	...	0·2951	0·2994	66·175	2·0330	1·8790	K × 0·06188	K × 0·06688	9·4	8·8	Light breeze S.W. (wind ahead).	1
2·687	5·647	1·841	0·2951	0·2994	70·125	1·9066	1·7705	K × 0·06542	K × 0·07045	9·4	9·8	Strong breeze from S.W.	2
2·597	4·082	1·836	0·2951	0·2994	70·30	2·0016	1·9026	K × 0·06140	K × 0·06610	9·4	9·0	Strong breeze from S.W.	3
2·715	5 647	...	0·2951	0·2994	72·325	1·9268	1·7938	K × 0·06471	K × 0·06952	9·4	9·8	Strong breeze from S.W.	4
1·810	2·640	...	0·2948	0·3014	38·4	2·3023	1·9971	K × 0·05428	K × 0·06240	6·2	6·0	Strong breeze from W.S.W.	5
1·838	4·034	1·843	0·2948	0·3014	33·475	1·9460	1 6545	K × 0·06424	K × 0·07623	6·2	7·0	Strong breeze from W.S.W.	6
1·605	2·361	0·835	0·2948	0·3014	22·987	2·3146	2·1332	K × 0·04957	K × 0·05833	6·2	5·2	The breeze freshens(little sea).	7
1·751	3·723	...	0·2948	0·3014	36·675	2·0310	1·8748	K × 0·05313	K × 0·07568	6·2	6·3	Pleasant gale from W.S.W.	8
2·063	3·536	...	0·2962	0·3010	48·775	2·2812	2·0482	K × 0·05448	K × 0·06071	7·5	6·8	Pleasant gale from W.	9
2·254	4·307	1·835	0·2962	0·3010	51·15	1·9502	1·7202	K × 0·06332	K × 0·07018	7·5	8·0	Pleasant gale from W.	10
1·986	3·548	1·836	0·2962	0·3010	47·65	2·3744	2·1232	K × 0·05259	K × 0·05875	7·5	6·0	Brisk gale from W.	11
2·131	3·940	...	0·2962	0·3010	43·525	1·8829	1·6666	K × 0·06582	K × 0·07436	7·5	7·8	Brisk gale from W.	12
1·787	3·971	...	0·2685	0·2724	39·0	2·3069	2·0544	K × 0·05816	K × 0·06671	7·1	6·3	Light breeze from E.	1 A
1·877	3·042	1·910	0·2685	0·2724	39·96	2·2308	1·9502	K × 0·06126	K × 0·07002	7·1	7·0	Faint breeze from E.	2
1·886	4·050	1·907	0·2685	0·2724	41·35	2·2831	2·0061	K × 0·05983	K × 0·06806	7·1	6·5	Faint breeze from E.	3
1·955	3·322	1·906	0·2685	0·2724	42·35	2·1774	1·9187	K × 0·07258	K × 0·07097	7·1	7·0	Faint breeze from E.	4
2·007	4·175	...	0·2685	0·2724	45·18	2·2074	1·9642	K × 0·06170	K × 0·06937	7·1	7·4	Light breeze from E.	5
1·825	3·434	...	0·2510	0·2529	36·48	2·2000	1·8560	K × 0·06745	K × 0·07817	6·3	7·0	Faint breeze from E.	6
1·621	3·222	1·946	0 2510	0·2529	31·16	2·3979	2·0452	K × 0·06374	K × 0·07592	6·3	6·0	Faint breeze from E.	7
1·638	3·172	1·961	0·2510	0·2529	30·13	2·1723	1·8128	K × 0·06822	K × 0·08187	6·3	6·2	Faint breeze from E.	8
1·655	3·279	...	0·2510	0·2529	32·0	2·2965	1·8936	K × 0·06461	K × 0·07657	6 3	6·0	Faint breeze from E.	9
2·325	4·401	...	0·2761	0·2797	55·44	2·0135	1·8323	K × 0·06627	K × 0·07284	9·1	9·0	Faint breeze from E.	10
2·334	4·439	1 897	0·2761	0·2797	56·95	2·3345	1·8560	K × 0·06472	K × 0·07095	9·1	8·7	Faint breeze from E.	11
2·626	4·923	1·879	0·2761	0·2797	67·39	2·9200	1·7774	K × 0·06798	K × 0·07343	9·1	9·0	Faint breeze from E.	12
2·591	4 840	...	0·2761	0·2797	69·88	2 0391	1·8947	K × 0·06399	K × 0·06892	9 1	9·0	Faint breeze from E.	13

RESULT OF EXPERIMENTS MADE WITH THE FRENCH

(A mètre is 39·37079 English inches, or 3·2808 English feet; a square

Number of the Run. A. ascending, D. descending.	Numbers of the Screws. See Table IV.	Length of each Run in Metres.	Date of Experiment.	High Speed, Medium Speed, or Low Speed.	Mean Draught of Water in Mètres.	Difference of Draught at Bow and Stern in Mètres.	Area of Immerged Midship Section in Square Mètres.	Diameter of Screw in Mètres.	Number of Blades of Screw.	Intended Pitch of Screw in Mètres.	Actual Pitch of Screw in Mètres.	Intended Fraction of Pitch.	Actual Fraction of Pitch.	Multiple of Gearing.	Mean Pressure in the Boiler in Centimètres of Mercury.	Proportion of Stroke made without Expansion.
1 A	27	1016·5	20th Nov. 1848	High	2·515	0·720	10·2915	1·680	4	2·608	2·598	0·450	0·453	5·091	33·125	20-100
2	27	1016·5	20th Nov. 1848	High	2·515	0 720	10·29·5	1·680	4	2·608	2·598	0·450	0·453	5·091	30·75	20-100
3	27	1016·5	20th Nov. 1848	High	2·515	0·720	10·29.5	1·680	4	2·608	2·598	0·450	0·453	5·091	28·0	20-100
4	27	1016·5	20th Nov. 1818	High	2·515	0 720	10·2915	1·680	4	2·608	2·598	0·450	0·453	5·091	31·0	20-100
1	27	1016·5	21st Nov. 1848	Medium	2·500	0·730	10·1895	1·680	4	2·608	2·598	0·450	0·453	5·091	17 5	20-100
2	27	1016·5	21st Nov. 1848	Medium	2·500	0·730	10·1895	1·6·0	4	2·608	2·598	0·450	0·453	5·091	18·0	70-100
3	27	1016·5	21st Nov. 1848	Medium	2·500	0·730	10·1895	1·680	4	2·608	2·598	0·450	0·453	5·091	18·5	70-100
4	27	1016·5	21st Nov. 1848	Medium	2·500	0·730	10·1895	1·680	4	2·608	2 598	0·450	0·453	5·091	26·5	70-100
5	27	1016·5	21st Nov. 1848	Medium	2·500	0·730	10·1895	1·680	4	2·608	2·598	0 450	0·453	5·091	27·0	70-100
6	27	1016·5	21st Nov. 1848	Medium	2·500	0 730	10·1895	1·680	4	2·608	2·598	0·450	0·453	5·091	32·0	70-100
7	27	1016·5	21st Nov. 1848	Medium	2·500	0·730	10 1895	1·680	4	2·608	2·598	0·450	0·453	5·091	26·0	70-100
8	27	1016·5	21st Nov. 1848	Medium	2 500	0·730	10·1895	1·68	4	2·608	2·598	0·450	0·453	5·091	5·0	70-100
1	28	1016·5	8th Nov. 1848	High	2·51	0·73	10·2575	1·680	4	2·608	2·568	0·375	...	5·091	25·875	20-100
2	28	1016·5	8th Nov. 1848	High	2·51	0·73	10·2575	1·680	4	2·608	2·568	0·375	...	5·091	33·875	20-100
3	28	1016·5	8th Nov. 1848	High	2·51	0·73	10·2575	1·680	4	2·608	2·568	0·375	...	5·091	35·5	20-100
4	28	1016·5	8th Nov. 1848	High	2·51	0·73	10·2575	1·680	4	2·608	2·568	0 375	...	5·091	37·875	20-100
5	28	1016·5	8th Nov. 1848	Low	2·51	0·73	10·2575	1·680	4	2·608	2·568	0·375	...	5·091	23·0	85-100
6	28	1016·5	8th Nov. 1848	Low	2·51	0·73	10·2575	1·680	4	2·608	2·568	0·375	...	5·091	19·5	85-100
7	28	1016·5	8th Nov. 1848	Low	2·51	0·73	10·2575	1·680	4	2·608	2·568	0·375	...	5·091	23·0	85 100
8	28	1016·5	8th Nov. 1848	Low	2·51	0·73	10·2575	1·680	4	2·608	2·568	0·375	...	5·091	24·0	85-100
9	28	1016·5	8th Nov. 1848	Low	2·51	0·73	10·2575	1·680	4	2·608	2·568	0·375	...	5·091	23·5	85-100
10	28	1016·5	8th Nov. 1848	Low	2·51	0·73	10·2575	1·680	4	2·608	2·568	0·375	...	5·091	21·0	85-100
11	28	1016·5	8th Nov. 1848	Medium	2·51	0·73	10·2575	1·680	4	2·608	2·568	0·375	...	5·091	27·0	85-100
12	28	1016·5	8th Nov. 1848	Medium	2·51	0·73	10·2575	1·680	4	2·608	2·568	0·375	...	5·091	20·0	85-100
13	28	1016·5	8th Nov. 1848	Medium	2·51	0·73	10·2575	1·680	4	2·608	2·568	0·375	...	5·091	28·5	85-100
1	28	1016·5	28th Dec. 1848	High	2·530	0·74	10·3935	1·680	4	2·608	2·568	0·375	...	5·091	...	50-100
2	28	1016·5	28th Dec. 1848	High	2·530	0·74	10·3935	1·680	4	2.608	2·568	0·375	...	5·091	...	50-100
3	28	1016·5	28th Dec. 1848	High	2·530	0·74	10·3935	1·680	4	2·608	2·568	0·375	...	5·091	...	50-100
4	28	1016·5	28th Dec. 1848	High	2·530	0·74	10·3935	1·680	4	2·608	2·568	0·375	...	5·091	...	50-100
5	28	1016·5	28th Dec. 1848	Medium	2·530	0·74	10·3935	1·680	4	2·608	2·568	0·375	...	5·091	...	70-100
6	28	1016·5	28th Dec. 1848	Medium	2·530	0·74	10·3935	1·680	4	2·608	2·568	0·375	...	5·091	...	70-100
7	28	1016·5	28th Dec. 1848	Medium	2·530	0·74	10·3935	1·680	4	2·608	2·568	0·375	...	5·091	...	70-100
1	29	1016·5	28th Nov. 1848	High	2·510	0·70	10·2643	1·680	4	2·608	2·661	0·300	0·300	5·091	25·875	20-100
2	29	1016·5	28th Nov. 1848	High	2·510	0·70	10·2643	1·680	4	2·608	2·661	0·300	0·300	5·091	29·825	20-100
3	29	1016·5	28th Nov. 1848	High	2·510	0·70	10·2643	1·680	4	2·608	2 661	0·300	0·300	5·091	31·5	20-100
4	29	1016·5	28th Nov. 1848	High	2·510	0·70	10·2643	1·680	4	2·608	2·661	0·300	0·300	5·091	29·0	20-100
5	29	1016·5	28th Nov. 1848	Medium	2·510	0·70	10·2643	1·680	4	2·608	2·661	0·300	0·300	5·091	35·5	70-100
6	29	1016·5	28th Nov. 1848	Medium	2·510	0·70	10·2643	1·680	4	2·608	2·661	0·300	0 300	5·091	32·5	70-100
7	29	1016·5	28th Nov. 1848	Medium	2·510	0·70	10·2643	1·680	4	2·608	2·661	0·300	0·300	5·091	28·0	70-100
8	29	1016·5	28th Nov. 1848	Medium	2·510	0·70	10·2643	1·680	4	2·608	2·661	0·300	0·300	5·091	26·5	70-100
9	29	1016·5	28th Nov. 1848	Low	2·510	0·70	10·2643	1·680	4	2·608	2·661	0·300	0·300	5·091	11·0	85-100
10	29	1016·5	28th Nov. 1848	Low	2·510	0·70	10·2643	1·680	4	2·608	2·661	0·300	0·300	5·091	9·0	85-100
11	29	1016 5	28th Nov. 1848	Low	2 510	0·70	10·2643	1·680	4	2·608	2·661	0·300	0·300	5·091	11·0	85-100
1	29	1016 5	29th Nov. 1848	Medium	2·505	0·76	10·2336	1·680	4	2·608	2·661	0·300	0·300	5·091	11·0	70-100
2	29	1016·5	29th Nov. 1848	Medium	2·505	0·76	10·2336	1·680	4	2·608	2·661	0·300	0·300	5·091	16·0	70-100
3	29	1016·5	29th Nov. 1848	Medium	2·505	0·76	10·2336	1·680	4	2·608	2·661	0·300	0·300	5·091	12·5	70-100
4	29	1016·5	29th Nov. 1848	High	2·505	0·76	10·2336	1·680	4	2·608	2 661	0·300	0·300	5·091	32·25	20-100
5	29	1016·5	29th Nov. 1848	High.	2·505	0·76	10·2336	1·680	4	2·608	2·661	0·300	0·300	5·091	29·75	20-100
6	29	1016·5	29th Nov. 1848	High	2·505	0·76	10·2356	1·680	4	2 608	2·661	0·300	0·300	5·091	29·875	20-100
1	33	1016·5	3rd Jan. 1849	High	2·500	0·70	10·1897	1·680	4	4·285	4·209	0·450	0·450	3·059	24·25	50-100
2	33	1016·5	3rd Jan. 1849	High	2·500	0·70	10·1897	1·680	4	4·285	4·209	0·450	0·450	3·059	29·876	50-100
3	33	1016·5	3rd Jan. 1849	High	2·500	0·70	10·1897	1·680	4	4·285	4·209	0·450	0·450	3·059	34·0	50-100
4	33	1016·5	3rd Jan. 1849	High	2·500	0·70	10·1897	1·680	4	4·285	4·209	0·450	0·450	3·059	26·25	50-100
5	33	1016·5	3rd Jan. 1849	Medium	2·500	0·70	10·1897	1·680	4	4·285	4·209	0·450	0·450	3·059	28·0	70-100
6	33	1016·5	3rd Jan. 1849	Medium	2·500	0·70	10·1897	1·680	4	4·285	4·209	0·450	0·450	3·059	19·5	70-100
7	33	1016·5	3rd Jan. 1849	Medium	2·500	0·70	10·1897	1·680	4	4·285	4·209	0·450	0·450	3·059	21·0	70-100
8	33	1016·5	3rd Jan. 1849	Medium	2·500	0 70	10·1897	1·680	4	4·285	4·209	0·450	0·450	3·059	20·0	70-100
1	33	1016·5	4th Jan. 1849	Low	2·525	0·75	10·3595	1·680	4	4·285	4·209	0·450	0·450	3·059	11·0	...
2	33	1016·5	4th Jan. 1849	Low	2 525	0·75	10·3595	1·680	4	4·285	4·209	0·450	0·450	3·059	14·0	...
3	33	1016·5	4th Jan. 1849	Low	2·525	0·75	10·3595	1·680	4	4·285	4·209	0·450	0·450	3·059	15·5	...
1	20	1016·5	4th Oct. 1848	Low	2·502	0·695	10·2019	1·858	4	3·513	3·553	0·600	0·625	4·00	17·5	...
2	20	1016·5	4th Oct. 1848	Low	2·502	0·695	10·2019	1·858	4	3·513	3·553	0·600	0·625	4·00	21·0	...
3	20	1016·5	4th Oct. 1848	Low	2·502	0·695	10·2019	1·858	4	3·513	3·553	0·600	0·625	4·00	17·0	...
4	20	1016·5	4th Oct. 1848	Low	2·502	0·695	10·2019	1·858	4	3·513	3·553	0·600	0·625	4·00	18·0	...
5	20	1016·5	4th Oct. 1848	Medium	2·502	0·695	10·2019	1·858	4	3·513	3·553	0·600	0·625	4·00	31·5	70-100
6	20	1016·5	4th Oct. 1848	Medium	2·502	0·695	10·2019	1·858	4	3·513	3·553	0·600	0·625	4·00	31·5	70-100
7	20	1016·5	4th Oct. 1848	Medium	2·502	0·695	10·2019	1·858	4	3·513	3·553	0·600	0·625	4·00	19·0	70-100
8	20	1016·5	4th Oct. 1848	Medium	2·502	0·695	10·2019	1·858	4	3·513	3·553	0·600	0·625	4·00	30·0	70-100
9	20	1016·5	4th Oct. 1848	High	2·502	0·695	10·2019	1·858	4	3·513	3·553	0·600	0·625	4·00	30·0	20-100
10	20	1016·5	4th Oct. 1848	High	2·502	0·695	10·2019	1·858	4	3·513	3·553	0·600	0·625	4·00	29·5	20-100
11	20	1016·5	4th Oct. 1848	High	2·502	0·695	10·2019	1·858	4	3·513	3·553	0·600	0·625	4·00	26·0	20-100
12	20	1016·5	4th Oct. 1848	High	2·502	0·695	10·2019	1·858	4	3·513	3·553	0·600	0·625	4·00	31·0	20-100
1	3	1016·5	24th Mar. 1849	Medium	2·49	0·70	10·12	2·050	4	5·229	...	0·375	...	2·285	25·5	35-100
2	3	1016·5	24th Mar. 1849	Medium	2·49	0·70	10·12	2·050	4	5·229	...	0·375	...	2·285	31·7	35-100
3	3	1016·5	24th Mar. 1849	Medium	2 49	0·70	10·12	2·050	4	5·229	...	0·375	...	2·285	28·0	35-100
4	3	1016·5	24th Mar. 1849	Medium	2·49	0·70	10·12	2·050	4	5·229	...	0·375	...	2·285	24·0	35-100
1	6 bis	2033·0	19th Oct. 1847	High	...	...	10·20	2·50	4	2·361	2·378	0·300	0·293	4·0	43·0	3-12
2	6 bis	2033·0	19th Oct. 1847	High	...	...	10·20	2·50	4	2·361	2·378	0·300	0·293	4·0	29·0	3-12
3	6 bis	2033·0	19th Oct. 1847	High	...	...	10·20	2·50	4	2·361	2·378	0·300	0·293	4·0	38·0	3-12
4	6 bis	2033·0	19th Oct. 1847	High	...	...	10·20	2·50	4	2·361	2·378	0·300	0·293	4·0	49·0	3-12
5	6 bis	2033·0	19th Oct. 1847	High	...	...	10·20	2·50	4	2·361	2·378	0·300	0·293	4·0	37·0	3-12
6	6 bis	2033·0	19th Oct. 1847	High	...	...	10·20	2·50	4	2·361	2·378	0·300	0·293	4·0	37·0	3-12
7	6 bis	2033·0	19th Oct. 1847	High	...	...	10·20	2·50	4	2·361	2·378	0·300	0·293	4·0	31·0	3-12

SCREW STEAM PACKET "PELICAN"—*continued.*

mètre is 10·764 square feet; and a centimètre is 0·39371 English inches.)

Number of Turns of the Screw per Second.	Absolute Speed of the Vessel in Mètres per Second.	Advance per Turn of the Screw in Mètres.	Mean Coefficient of Slip with Intended Pitch.	Mean Coefficient of Slip with Actual Pitch.	Mean Pressure in the Cylinders in Centimètres of Mercury.	Value of $\left(\frac{p}{\frac{r}{n^2}}\right)$	Value of $\left(\frac{p-5}{\frac{r}{n^2}}\right)$	Efficiency or Utilization with p.	Efficiency or Utilization with $(p-5)$.	Mean Speed of the Vessel in Knots.	Speed shown by the Log in Knots.	State of the Wind and Sea, and Remarks.	Number of the Run, A. ascending, D. descending.
2·722	4·201	1·802	0·3107	0·3083	69·50	1·8422	1·7105	K × 0·06314	K × 0·06803	9·5	9 0	Light breeze, W.S.W. (wind abeam.)	1 A
2·710	5·585	1·793	0·3107	0·3083	68·525	1·8323	1·6601	K × 0·06348	K × 0·06847	9·5	9·0	Ditto.	2
2·685	4·141	...	0·3107	0·3083	68·025	1·8309	1·7042	K × 0·06283	K × 0·06829	9·5	9·0	Ditto.	3
2·777	5·601	...	0·3107	0·3083	71 025	1·8015	1·6831	K × 0·06427	K × 0·06914	9·5	9·4	Ditto.	4
2·154	5·134	...	0·2987	0·2948	44 476	1·8842	1·6718	K × 0·06756	K × 0·07613	7·85	7·5	Ditto.	1
2·049	2 718	1·855	0·2980	0 2948	43·65	2·0421	1·8080	K × 0·06233	K × 0·07037	7·85	6·8	Ditto.	2
2·161	5·032	1·851	0·2988	0·2948	44·775	1·8829	1·6728	K × 0·06721	K × 0·07566	7·85	7·8	Ditto.	3
2·198	5·080	1·831	0·2988	0·2948	38·56	1·9292	1·7705	K × 0·06413	K × 0·07149	7·85	7·0	Ditto.	4
2·266	4·958	1·813	0·2988	0·2948	48·96	1·8725	1·6·52	K × 0·06382	K × 0·07091	7·85	8·0	The breeze freshens a little.	5
2·278	3·332	1·819	0 2988	0·2948	52·87	2·0078	1·8028	K × 0·05968	K × 0·06593	7·85	7·0	Pleasant breeze from S.S.W.	6
2·227	4·840	1·822	0·2988	0·2948	47·13	1·8868	1·6873	K × 0·06364	K × 0·07119	7·85	7·4	Ditto.	7
2·199	3·258	...	0·2988	0·2948	49·27	1·9727	1·7728	K × 0·06127	K × 0·06819	7·85	7·0	Ditto.	8
2·546	5·240	...	0·3039	0·2932	62·56	1·8960	1·7456	K × 0·06379	K × 0·06932	9·4	9·0	Faint breeze from N.E.	1
2·654	4·326	1·883	0·3039	0·2932	67·1	1·8712	1·7323	K × 0·06400	K × 0·06915	9·4	5·0	Faint breeze from N.E.	2
2·700	5·359	1·808	0·3039	0·2932	69·475	1·8726	1·7378	K × 0·06336	K × 0·0[illegible]828	9·4	9·3	Faint breeze from N.	3
2·724	4·458	...	0·3039	0·2932	70·425	1·8752	1·7423	K × 0·06291	K × 0·06770	9·4	9·4	Faint breeze from N.	4
1·949	4·018	...	0·2663	0·2555	40·0	2·0634	1·8092	K × 0·06636	K × 0·07584	6·4	7·0	Faint breeze from N.	5
1·835	3·217	1·902	0·2663	0·2555	36·2	2·1133	1·8637	K × 0·06494	K × 0·07536	6·4	7·3	Faint breeze from N.	6
1·850	3·751	1·921	0·2663	0·2555	36·09	2·0748	1·7832	K × 0·06628	K × 0·07696	6·4	7·0	Faint breeze from N.	7
1·593	2·973	1·999	0·2663	0·2555	29·475	2·2442	1·8947	K × 0·06149	K × 0·07406	6·4	5·8	Faint breeze from N.	8
1·611	2·990	1·916	0·2663	0·2555	29·7	2·2474	1·8687	K × 0·06244	K × 0·07508	6·4	...	Light airs from N.W.	9
1·590	3·317	...	0·2663	0·2555	28·625	2·2217	1·8311	K × 0·06313	K × 0·07661	6·4	5·8	Faint breeze from N.W.	10
2·231	2·778	...	0·2844	0·2740	47·95	1·8933	1·6957	K × 0·06855	K × 0·07653	7·9	8·0	Faint breeze from N.N.W.	11
2·121	5·436	1·866	0·2844	0·2740	45·575	1·9955	1·7739	K × 0·06514	K × 0·07317	7·91	8·0	Faint breeze from N.N.W.	12
2·191	2·516	...	0·2844	0·2740	48·550	1·9699	1·7659	K × 0·06586	K × 0·07349	7·9	7·5	Strong breeze from N.N.W.	13
2·458	3·400	...	0·2918	0·2885	57·775	1·8999	1·7356	K × 0·06788	K × 0·07432	9·2	8·8	Strong breeze from N.N.E.	1
2·553	5·876	1·855	0·2918	0·2885	63·7	1·9199	1·7693	K × 0·06612	K × 0·07174	9·2	8·5	Strong breeze from N.N.E.	2
2·582	3·670	1·839	0·2918	0·2885	62·78	1·8711	1·7224	K × 0·06752	K × 0·07336	9·2	8·8	Pleasant breeze from N N.E.	3
2·694	5·892	...	0·2918	0·2885	68·587	1·8829	1·7467	K × 0·06673	K × 0·07198	9·2	8·6	Pleasant breeze from N.N.E.	4
2·266	3·311	...	0·2929	0·2902	51·35	1·9657	1·7739	K × 0·06449	K × 0·07145	8·0	7·8	Pleasant breeze from N.N.E.	5
2·261	4·930	1·844	0·2929	0·2902	51·64	1·9823	1·7926	K × 0·06329	K × 0·07073	8·0	7·6	Pleasant breeze from N.N.E.	6
2·190	3·377	...	0·2929	0·2902	45·49	1·8623	1·7659	K × 0·06804	K × 0·07646	8·0	7·6	Pleasant breeze from N.N.E.	7
2·787	6·314	...	0·3233	0·3367	65·70	1·6626	1·5353	K × 0·06673	K × 0·07223	9·7	9·5	Faint breeze from S.W. (going very free)	1
2·779	3·743	1·771	0·3233	0·3367	66·5	1·6728	1·5466	K × 0·06633	K × 0·07172	9·7	9·6	Faint breeze from S.W. (quite close to the wind).	2
2·880	6·353	1·759	0·3233	0·3367	68·475	1·6221	1·5032	K × 0·06693	K × 0·07221	9·7	9·5	Ditto.	3
2·810	3·643	...	0·3233	0·3367	68·925	1·7317	1·5132	K × 0·06654	K × 0·07177	9·7	9·2	Ditto.	4
2·510	5·743	...	0·3081	0·3228	53·3	1·6617	1·5074	K × 0·06992	K × 0·07716	8·5	8·0	Ditto.	5
2·405	3·137	1·779	0·3081	0·3228	50·075	1·6956	1·5242	K × 0·06845	K × 0·07605	8·5	7·3	Ditto.	6
2·392	5·436	1·803	0·3081	0·3228	49·5	1·5925	1·5216	K × 0·06940	K × 0·07720	8·5	7·8	Ditto.	7
2·338	3·191	...	0·3084	0·3228	48·66	1·7235	1·5467	K × 0·06812	K × 0·07592	8·5	7·0	Ditto.	8
1·923	2·824	...	0·2940	0·3082	34·87	1·7966	1·5752	K × 0·06779	K × 0·07913	6·6	8·8	Ditto.	9
1·799	3·963	1·841	0·2940	0·3082	30·412	1·8459	1·5423	K × 0·06750	K × 0·08079	6·6	6·0	Ditto.	10
1·868	2·855	...	0·2940	0·3082	33·82	1·9052	1·6230	K × 0·06542	K × 0·07856	6·6	6·0	Ditto.	11
2·170	3·023	...	0·3184	0·3322	40·99	1·7166	1·5024	K × 0·06527	K × 0·07434	7·5	8·0	Strong breeze from S.W. (wind abaft.)	1
2·179	4·795	1·777	0·3184	0·3322	45·176	1·8687	1·6625	K × 0·05974	K × 0·06717	7·5	...	Ditto.	2
2·183	2·868	...	0·3184	0·3322	39·61	1·6317	1·4602	K × 0·06840	K × 0·07847	7·5	7·5	Ditto.	33
2·811	5·480	...	0·3367	0·3495	69·81	1·7356	1·6115	K × 0·05939	K × 0·06397	9·6	9·5	Strong breeze from W.S.W.	4
2·183	3·894	1·731	0·3367	0·3495	69·11	1·6318	1·5132	K × 0·06318	K × 0·06811	9·6	9·7	Strong breeze from W.S.W.	5
2·836	5·962	...	0·3367	0·3195	70·30	1·7345	1·6115	K × 0·05940	K × 0·06395	9·6	9·0	Strong breeze from W.S.W.	6
1·998	5·663	...	0·4271	0·4167	55·212	5·0086	4·5551	K × 0·05865	K × 0·06449	9·4	...	Light br., E.S.E. (wind favor)	1
1·956	3·744	2·454	0·4271	0·4167	59·375	3·0712	4·6153	K × 0·05792	K × 0·06325	9·4	...	Light br., do. (wind ahead).	2
2·006	6·033	2·456	0·4271	0·4167	61·612	4·9534	4·4921	K × 0·05931	K × 0·06455	9·4	...	Light br. do., (wind ahead.)	3
1·943	3·617	...	0·4271	0·4167	57·787	5·0026	4·5288	K × 0·05873	K × 0·06435	9·4	...	Light br., do. (wind ahead.)	4
1·748	5·585	...	0·4235	0·4132	44·212	4·7405	4·2676	K × 0·06235	K × 0·070.8	8·0	...	Faint breeze from S. E.	5
1·671	2·872	2·467	0·4235	0·4132	43·222	4·9907	4·4456	K × 0·06068	K × 0·06856	8·0	...	Light breeze from S. E.	6
1·633	5·308	2·477	0·4235	0·4132	41·475	4·9592	4·4253	K × 0·06106	K × 0·06931	8·0	...	Light breeze from S. E.	7
1·666	2·951	...	0·4235	0·4132	43·475	5·0670	4·4693	K × 0·05978	K × 0·06751	8·0	...	Light breeze from S. E.	8
1·392	3·162	...	0·4058	0·3951	32·14	5·3655	4·5224	K × 0·06211	K × 0·07357	6·9	6·8	L ght breeze, S.S.E.	1
1·399	3·887	3·546	0·4058	0·3951	32·19	5·3746	4·5403	K × 0·06202	K × 0·07342	6·9	6·6	Light breeze, S.S.E.	2
1·400	3·300	...	0·4058	0·3951	31·421	5·2381	4·8653	K × 0·06363	K × 0·07452	6·9	6·5	Light breeze, S.S.E.	3
1·317	3·567	...	0·2684	0·2766	40·80	4·7866	4·1903	K × 0·07167	K × 0·08168	6·0	6·0	Light breeze, W.S.W.	1
1·277	3·237	2·577	0·2684	0·2766	43·675	5·2037	4·6008	K × 0·06709	K × 0·07587	6·0	6·0	Light breeze, W.S.W.	2
1·332	3·366	2·563	0·2684	0·2766	42·180	4·4719	4·0401	K × 0·06771	K × 0·08729	6·0	7·0	Pleasant br., do. (wind ahead).	3
1·290	3·440	...	0·2684	0·2766	45·625	5·2772	4·7024	K × 0·06612	K × 0·07433	6·0	6 0	Pleasant br., do. (wind ahead).	4
1·533	3·710	...	0·2742	0·2829	53·14	4·4536	4·0534	K × 0·07540	K × 0·08284	7·0	8·0	Strong br., do. (wind astern).	5
1·458	3·994	2·554	0·2742	0·2829	54·60	4·9542	4·5111	K × 0·06792	K × 0·07474	7·0	7·0	Strong breeze, W.S.W.	6
1·343	3·094	2·543	0·2742	0·2829	43·55	4·7523	4·3078	K × 0·06706	K × 0·07981	7·0	7·5	Strong breeze, W.S.W.	7
1·424	3·979	...	0·2742	0·2829	52·462	5·0873	4·6024	K × 0·06633	K × 0·07332	7·0	6·4	Strong breeze, W.S.W.	8
1·801	3·940	...	0·2865	0·2946	73·463	4·5472	4·2378	K × 0·07124	K × 0·07644	6·6	9·4	Strong breeze, W.S.W.	9
1·742	4·995	2·521	0·2865	0·2946	72·60	4·7129	4·3885	K × 0·06891	K × 0·07401	6·6	8·8	Pleasant gale, do. (a little sea).	10
1·755	3·852	2·492	0·2865	0·2946	70·26	4·5494	4·2392	K × 0·07112	K × 0·07675	6·6	9·0	Plea-ant gale, W.S.W.	11
1·773	3·057	...	0·2865	0·2946	75·938	4·6951	4·3864	K × 0·06908	K × 0·07396	6·6	8·0	Pleasant gale, W.S.W.	12
1·773	3·057	...	0·2865	0·2946	75·938	4·6951	4·3864	K × 0·06908	K × 0·07396	6·6	8·0	Strong breeze from N.N.E.	1
1·131	4·141	...	0·3473	...	35·88	12·265	10·315	K × 0·0391	K × 0·07425	7·42	8·0	Strong breeze from N.N.E.	2
1·148	3·505	3·413	0·3473	...	38·95	12·916	11·253	K × 0·06371	K × 0·06965	7·42	7·8	Strong breeze from N.N.E.	3
1·130	4·401	3·417	0·3473	...	36·93	12·635	10·926	K × 0·06201	K × 0·07172	7·42	7·5	Strong breeze from N.N.E.	4
1·133	3·217	...	0·3473	...	...	...	...	...	...	7·42	7·5	Strong breeze from N.N.E.	
6·454	2·489	...	0·122	0·128	...	...	...	...	...	9·96	...	Smooth sea, strong breeze from W.	1
3·690	2·403	2·070	0·122	0·128	...	...	...	...	...	9·96	...	Ditto.	2
6·993	2·478	2·071	0·122	0·128	...	...	...	...	...	9·96	...	Ditto.	3
4·066	2·560	2·073	0·122	0·128	...	...	...	...	...	9·96	...	The breeze is a little less strong.	4
6·353	2·475	2·072	0·122	0·128	...	...	...	...	...	9·96	...	Ditto.	5
3·924	2·478	2·078	0·122	0·128	...	...	...	...	...	9·96	...	Ditto.	6
6·974	2·420	...	0·122	0·128	...	...	...	...	...	9·96	...	Ditto.	7

RESULT OF EXPERIMENTS MADE WITH THE FRENCH

(A mètre is 39·37079 English inches, or 3·2808 English feet; a square

Number of the Run. A. ascending, D. descending.	Numbers of the Series. See Table IV.	Length of each Run in Mètres.	Date of Experiment.	High Speed, Medium Speed, or Low Speed.	Mean Draught of Water in Mètres.	Difference of Draught at Bow and Stern in Mètres.	Area of Immerged Midship Section in Square Mètres.	Diameter of Screw in Mètres.	Number of Blades of Screw.	Intended Pitch of Screw in Mètres.	Actual Pitch of Screw in Mètres.	Intended Fraction of Pitch.	Actual Fraction of Pitch.	Multiple of Gearing.	Mean Pressure in the Boiler in Centimètres of Mercury.	Proportion of Stroke made without Expansion.
1 A	6 bis	2033·0	20th Oct. 1847	High	...	...	10·20	2·50	4	2·361	2·378	0·300	0·293	4·0	37·0	5-10
2	6 bis	2033·0	20th Oct. 1847	High	...	...	10·20	2·50	4	2·361	2·378	0·300	0·293	4·0	52·0	5-10
3	6 bis	2033·0	20th Oct. 1847	High	...	...	10·20	2·50	4	2·361	2·378	0·300	0·293	4·0	61·0	5-10
1 D	7	2033·0	3d Nov. 1847	High	...	...	10·0	2·50	4	2·361	2·394	0·300	0·297	4·0	35·0	5-10
2	7	2033·0	3d Nov. 1847	High	...	...	10·0	2·50	4	2·361	2·394	0·300	0·297	4·0	61·0	5-10
3	7	2033·0	3d Nov. 1847	High	...	...	10·0	2·50	4	2·361	2·394	0·300	0·297	4·0	51·0	5-10
4	7	2033·0	3d Nov. 1847	High	...	...	10·0	2·50	4	2·361	2·394	0·300	0·297	4·0	48·0	5-10
5	7	2033·0	3d Nov. 1847	High	...	...	10·0	2·50	4	2·361	2·394	0·300	0·297	4·0	39·0	5-10
1	7	2033·0	4th Nov. 1847	High	...	...	10·0	2·50	4	2·361	2·394	0·300	0·297	4·0	53·0	3-10
2	7	2033·0	4th Nov. 1847	High	...	...	10·0	2·50	4	2·361	2·394	0·300	0·297	4·0	50·0	3-10
3	7	2033·0	4th Nov. 1847	High	...	...	10·0	2·50	4	2·361	2·394	0·300	0·297	4·0	51·0	3-10
4	7	2033·0	4th Nov. 1847	High	...	...	10·0	2·50	4	2·361	2·394	0·300	0·297	4·0	63·0	3-10
5	7	2033·0	4th Nov. 1847	High	...	...	10·0	2·50	4	2·361	2·394	0·300	0·297	4·0	54·0	3-10
6	7	2033·0	4th Nov. 1847	High	...	...	10·0	2·50	4	2·361	2·394	0·300	0·297	4·0	57·0	3-10
7	7	2033·0	4th Nov. 1847	High	...	...	10·0	2·50	4	2·361	2·394	0·300	0·297	4·0	55·0	3-10
1	14	2033·0	28th Dec. 1847	High	...	...	10·12	2·50	4	5·229	5·209	0·450	0·455	3·06	40·0	3-10
2	14	2033·0	28th Dec. 1847	High	...	...	10·12	2·50	4	5·229	5·209	0·450	0·455	3·06	55·0	3-10
3	14	2033·0	28th Dec. 1847	High	...	...	10·12	2·50	4	5·229	5·209	0·450	0·455	3·06	60·0	3-10
4	14	2033·0	28th Dec. 1847	High	...	...	10·12	2·50	4	5·229	5·209	0·450	0·455	3·06	72·0	3-10
5	14	2033·0	28th Dec. 1847	High	...	...	10·12	2·50	4	5·229	5·209	0·450	0·455	3·06	65·0	3-10
6	14	2033·0	28th Dec. 1847	High	...	...	10·12	2·50	4	5·229	5·209	0·450	0·455	3·06	58·0	3-10
7	14	2033·0	28th Dec. 1847	High	...	...	10·12	2·50	4	5·229	5·209	0·450	0·455	3·06	65·0	3-10
1	14	2033·0	8th Jan. 1848	Medium	...	...	10·12	2·50	4	5·229	5·209	0·450	0·455	3·06	32·0	3-10
2	14	2033·0	8th Jan. 1848	Medium	...	...	10·12	2·50	4	5·229	5·209	0·450	0·455	3·06	35·0	3-10
3	14	2033·0	8th Jan. 1848	Medium	...	...	10·12	2·50	4	5·229	5·209	0·450	0·455	3·06	28·0	3-10
4	14	2033·0	8th Jan. 1848	High	...	...	10·12	2·50	4	5·229	5·209	0·450	0·455	3·06	45·0	3-12
5	14	2033·0	8th Jan. 1848	High	...	...	10·12	2·50	4	5·229	5·209	0·450	0·455	3·06	41·0	3-12
1	14	1016·5	18th Aug. 1848	High	2·505	0·810	10·2335	2·500	4	5·229	5·209	0·450	0·455	2·2857	42·875	30-100
2	14	1016·5	18th Aug. 1848	High	2·505	0·810	10·2335	2·500	4	5·229	5·209	0·450	0·455	2·2857	47·25	30-100
3	14	1016·5	18th Aug. 1848	High	2·505	0·810	10·2335	2·500	4	5·229	5·209	0·450	0·455	2·2857	52·0	30-100
4	14	1016·5	18th Aug. 1848	High	2·505	0·810	10·2335	2·500	4	5·229	5·209	0·450	0·455	2·2857	49·25	30-100
5	14	1016·5	18th Aug. 1848	High	2·505	0·810	10·2335	2·500	4	5·229	5·209	0·450	0·455	2·2857	47·0	30-100
6	14	1016·5	18th Aug. 1848	Medium	2·505	0·810	10·2335	2·500	4	5·229	5·209	0·450	0·455	2·2857	26·875	70-100
7	14	1016·5	18th Aug. 1848	Medium	2·505	0·810	10·2335	2·500	4	5·229	5·209	0·450	0·455	2·2857	31·625	70-100
8	14	1016·5	18th Aug. 1848	Medium	2·505	0·810	10·2335	2·500	4	5·229	5·209	0·450	0·455	2·2857	33·175	70-100
9	14	1016·5	18th Aug. 1848	Medium	2·505	0·810	10·2335	2·500	4	5·229	5·209	0·450	0·455	2·2857	29·5	70-100
10	14	1016·5	18th Aug. 1848	Low	2·505	0·810	10·2335	2·500	4	5·229	5·209	0·450	0·455	2·2857	26·14	80-100
11	14	1016·5	18th Aug. 1848	Low	2·505	0·810	10·2335	2·500	4	5·229	5·209	0·450	0·455	2·2857	14·0	80-100
12	14	1016·5	18th Aug. 1848	Low	2·505	0·810	10·2335	2·500	4	5·229	5·209	0·450	0·455	2·2857	10·5	80-100
13	14	1016·5	18th Aug. 1848	Low	2·505	0·810	10·2335	2·500	4	5·229	5·209	0·450	0·455	2·2857	9·855	80-100
1	15	1016·5	15th Aug. 1848	Low	2·51	0·69	10·2576	2·500	4	5·229	5·366	0·300	0·292	2·29	16·0	90-100
2	15	1016·5	15th Aug. 1848	Low	2·51	0·69	10·2576	2·500	4	5·229	5·366	0·300	0·292	2·29	16·0	90-100
3	15	1016·5	15th Aug. 1848	Low	2·51	0·69	10·2576	2·500	4	5·229	5·366	0·300	0·292	2·29	14·5	90-100
4	15	1016·5	15th Aug. 1848	Low	2·51	0·69	10·2576	2·500	4	5·229	5·366	0·300	0·292	2·29	11·0	90-100
5	15	1016·5	15th Aug. 1848	High	2·51	0·69	10·2576	2·500	4	5·229	5·366	0·300	0·292	2·29	36·125	30-100
6	15	1016·5	15th Aug. 1848	High	2·51	0·69	10·2576	2·500	4	5·229	5·366	0·300	0·292	2·29	33·687	30-100
7	15	1016·5	15th Aug. 1848	High	2·51	0·69	10·2576	2·500	4	5·229	5·366	0·300	0·292	2·29	37·375	30-100
8	15	1016·5	15th Aug. 1848	High	2·51	0·69	10·2576	2·500	4	5·229	5·366	0·300	0·292	2·29	35·875	30-100
9	15	1016·5	15th Aug. 1848	High	2·51	0·69	10·2576	2·500	4	5·229	5·366	0·300	0·292	2·29	37·187	30-100
1	15	1016·5	16th Aug. 1848	High	2·505	0·70	10·2335	2·500	4	5·229	5·366	0·300	0·292	2·29	40·375	30-100
2	15	1016·5	16th Aug. 1848	High	2·505	0·70	10·2335	2·500	4	5·229	5·366	0·300	0·292	2·29	48·0	30-100
3	15	1016·5	16th Aug. 1848	High	2·505	0·70	10·2335	2·500	4	5·229	5·366	0·300	0·292	2·29	36·875	30-100
4	15	1016·5	16th Aug. 1848	High	2·505	0·70	10·2335	2·500	4	5·229	5·366	0·300	0·292	2·29	45·0	30-100
1	22	1016·5	15th Jan. 1849	High	2·48	...	10·0535	2·500	4	curved directrix, or increasing pitch. 4·286 to 6·381	...	0·450	...	3·059	47·0	20-100
2	22	1016·5	15th Jan. 1849	High	2·48	...	10·0535	2·500	4	curved directrix, or increasing pitch. 4·286 to 6·381	...	0·450	...	3·059	51·0	20-100
3	22	1016·5	15th Jan. 1849	High	2·48	...	10·0535	2·500	4	curved directrix, or increasing pitch. 4·286 to 6·381	...	0·450	...	3·059	49·0	20-100
4	22	1016·5	15th Jan. 1849	High	2·48	...	10·0535	2·500	4	curved directrix, or increasing pitch. 4·286 to 6·381	...	0·450	...	3·059	52·0	20-100
5	22	1016·5	15th Jan. 1849	Medium	2·48	...	10·0535	2·500	4	curved directrix, or increasing pitch. 4·286 to 6·381	...	0·450	...	3·059	21·0	50-100
6	22	1016·5	15th Jan. 1849	Medium	2·48	...	10·0535	2·500	4	curved directrix, or increasing pitch. 4·286 to 6·381	...	0·450	...	3·059	17·0	50-100
7	22	1016·5	15th Jan. 1849	Medium	2·48	...	10·0535	2·500	4	curved directrix, or increasing pitch. 4·286 to 6·381	...	0·450	...	3·059	33·0	50-100
8	22	1016·5	15th Jan. 1849	Medium	2·48	...	10·0535	2·500	4	curved directrix, or increasing pitch. 4·286 to 6·381	...	0·450	...	3·059	33·0	50-100
9	22	1016·5	15th Jan. 1849	Medium	2·48	...	10·0535	2·500	4	curved directrix, or increasing pitch. 4·286 to 6·381	...	0·450	...	3·059	46·0	50 100
10	22	1016·5	15th Jan. 1849	Medium	2·48	...	10·0535	2·500	4	curved directrix, or increasing pitch. 4·286 to 6·381	...	0·450	...	3·059	17·0	50-100
1	22	...	...	...	...	...	...	2·500	4	curved directrix, or increasing pitch. 4·286 to 6·381	...	0·450	...	2·286	39·0	2-10
2	22	...	...	...	...	...	...	2·500	4	curved directrix, or increasing pitch. 4·286 to 6·381	...	0·450	...	2·286	40·0	2-10
3	22	...	...	...	...	...	...	2·500	4	curved directrix, or increasing pitch. 4·286 to 6·381	...	0·450	...	2·286	35·0	2-10
4	22	...	...	...	...	...	...	2·500	4	curved directrix, or increasing pitch. 4·286 to 6·381	...	0·450	...	2·286	47·0	85-100
5	22	...	...	...	...	...	...	2·500	4	curved directrix, or increasing pitch. 4·286 to 6·381	...	0·450	...	2·286	35·0	85-100
6	22	...	...	...	...	...	...	2·500	4	curved directrix, or increasing pitch. 4·286 to 6·381	...	0·450	...	2·286	31·0	85-100
7	22	...	...	...	...	...	...	2·500	4	curved directrix, or increasing pitch. 4·286 to 6·381	...	0·450	...	2·286	30·0	7-10

SCREW STEAM PACKET PELICAN"— *continued.*

mètre is 10·764 square feet; and a centimètre is 0·39371 English inches.)

Number of Turns of the Screw per Second.	Absolute Speed of the Vessel in Mètres per Second.	Advance per Turn of the Screw in Mètres.	Mean Coefficient of Slip with intended Pitch.	Mean Coefficient of Slip with Actual Pitch.	Mean Pressure in the Cylinders in Centimètres of Mercury.	Value of $\left(\frac{p}{\frac{r}{n^2}}\right)$	Value of $\left(\frac{p\ s}{\frac{r}{n^2}}\right)$	Efficiency or Utilization with p.	Efficiency or Utilization with $(p-s)$.	Mean Speed of the Vessel in Knots.	Speed shown by the Log in Knots.	State of the Wind and Sea, and Remarks.	Number of the Run. A. ascending. D. descending.
5·745	2·425	...	0·118	0·124	...	...	...	...	...	10·22	...	Smooth sea, strong breeze from N.W.	1 A
4·706	2·518	2·082	0·118	0·124	...	...	...	...	...	10·22	...	Ditto.	2
5·859	2·628	...	0·118	0·124	...	...	...	...	...	10·22	...	Ditto.	3
2·117	5·944	...	0·048	0·061	...	...	...	...	...	10·01	...	Smooth water, calm.	1 D
2·305	3·986	2·254	0·048	0·061	...	...	...	...	...	10·01	...	Smooth water, calm.	2
2·316	6·393	2·245	0·048	0·061	...	...	...	...	...	10·01	...	Smooth water, calm.	3
2·268	3·843	2·245	0·048	0·061	...	...	...	...	...	10·01	...	Smooth water, calm.	4
2·196	6·236	...	0·048	0·061	...	...	...	...	...	10·01	...	Smooth water, calm.	5
2·383	4·537	...	0·061	0·074	...	...	...	...	...	10·28	...	Strong breeze from E.	1
2·353	5·978	2·227	0·061	0·074	...	...	...	...	...	10·28	...	Strong breeze from E.	2
2·364	4·568	2·227	0·061	0·074	...	...	...	...	...	10·28	...	Strong breeze from E.	3
2·472	6·460	2·224	0·061	0·074	...	...	...	...	...	10·28	...	Strong breeze from E.	4
2·357	4·427	2·205	0·061	0·074	...	...	...	...	...	10·28	...	Strong breeze from E.	5
2·388	5·979	2·219	0·061	0·074	...	...	...	...	...	10·28	...	Strong breeze from E.	6
2·376	4·663	...	0·061	0·074	...	...	...	...	...	10·28	...	Strong breeze from E.	7
1·243	6·255	...	0·220	0·216	...	...	...	...	...	10·35	...	Smooth sea, faint breeze, from N.E.	1
1·281	4·175	4·106	0·220	0·216	...	...	...	...	...	10·35	...	Ditto.	2
1·313	6·413	4·084	0·220	0·216	...	...	...	...	...	10·35	...	Light breeze from N.E.	3
1·340	4·429	4·091	0·220	0·216	...	...	...	...	...	10·35	...	Light breeze from N.E.	4
1·338	6·537	4·056	0·220	0·216	...	...	...	...	...	10·35	...	Strong breeze from N.E.	5
1·293	4·033	4·058	0·220	0·216	...	...	...	...	...	10·35	...	Strong breeze from N.E.	6
1·306	6·632	...	0·220	0·216	...	...	...	...	...	10·35	...	Strong breeze from N.E.	7
1·018	5·910	...	0·194	0·191	...	...	...	...	...	8·25	...	Strong breeze from N.E.	1
1·025	2·728	4·212	0·194	0·191	...	...	...	...	...	8·25	...	Strong breeze from N.E.	3
0·962	5·694	...	0·194	0·191	...	...	...	...	...	8·25	...	Strong breeze from N.E.	3
1·299	2·807	...	0·207	...	...	...	...	...	...	10·35	...	Strong breeze from N.E.	4
1·272	6·845	4·143	0·207	...	...	...	...	...	...	10·35	...	Strong breeze from N.E.	5
1·328	6·537	...	0·2445	0·2415	70·95	17·727	16·466	K × 0·06909	K × 0·07432	10·34	...	Pleasant breeze from W.S.W.	1
1·331	3·917	3·939	0·2445	0·2415	73·15	18·079	16·865	K × 0·06771	K × 0·07267	10·34	...	Pleasant breeze from W.S.W.	2
1·384	6·799	3·937	0·2445	0·2415	76·90	17·882	16·734	K × 0·06835	K × 0·07311	10·34	...	Pleasant breeze from W.S.W.	3
1·328	3·851	3·979	0·2445	0·2415	74·3	18·375	17·142	K × 0·06662	K × 0·07140	10·34	...	Pleasant breeze from W.S.W.	4
1·307	6·779	...	0·2445	0·2415	69·48	17·800	16·522	K × 0·06988	K × 0·07637	10·34	...	Pleasant breeze from W.S.W.	5
1·121	3·012	...	0·220	0·2170	54·05	18·834	17·093	K × 0·07251	K × 0·07988	9·02	...	Light breeze from W.S.W.	6
1·146	6·161	4·085	0·220	0·2170	55·0	18·275	16·613	K × 0·07419	K × 0·08160	9·02	...	Light breeze from W.S.W.	7
1·130	3·222	4·074	0·220	0·2170	52·85	18·121	16·414	K × 0·07536	K × 0·0·322	9·02	...	Light breeze from W.SW.	8
1·156	5·979	...	0·220	0·2170	52·65	17·221	15·590	K × 0·07873	K × 0·08701	9·02	...	Light breeze from W.S.W.	9
1·054	3·202	...	0·206	0·203	45·98	18·330	16·342	K × 0·07886	K × 0·02848	7·83	...	Faint breeze from W.	10
0·9687	5·121	4·164	0·206	0·203	37·68	17·582	15·251	K × 0·08223	K × 0·09480	7·83	...	Faint breeze from W.	11
0·9384	2·221	4·140	0·206	0·203	38·03	17·970	15·598	K × 0·08064	K × 0·09285	7·83	...	Faint breeze from W.	12
0·9588	4·887	...	0·206	0·203	35·65	17·220	14·808	K × 0·08415	K × 0·09785	7·83	...	Faint breeze from W.	13
0·874	3·374	...	0·2085	0·2292	29·23	16·901	14·029	K × 0·08300	K × 0·09995	7·26	7·0	Faint breeze from N.W.	1
0·829	3·807	4·1221	0·2085	0·2292	28·15	17·500	14·383	K × 0·08015	K × 0·09750	7·26	6·5	Faint breeze from N.W.	2
0·863	2·990	4·1559	0·2085	0·2292	27·93	17·045	13·871	K × 0·08228	K × 0·10017	7·26	6·8	Faint breeze from N.W.	3
0·886	4·099	...	0·2085	0·2292	25·35	17·289	13·873	K × 0·08313	K × 0·10361	7·26	6·0	Faint breeze from N.W.	4
1·321	3·884	...	0·2084	0·2665	65·63	16·472	15·212	K × 0·07607	K × 0·08233	9·9	10·0	Light breeze N.W.	5
1·274	6·474	3·6632	0·2084	0·2665	62·55	16·566	15·235	K × 0·07566	K × 0·38225	9·9	10·7	Light breeze N.W.	6
1·305	3·710	3·9338	0·2084	0·2665	65·35	16·802	15·514	K × 0·07458	K × 0·08075	9·9	11·5	Light breeze N.W.	7
1·283	6·423	3·911	0·2084	0·2665	63·65	16·603	15·299	K × 0·07546	K × 0·08185	9·9	9·6	Light breeze N.W.	8
1·312	3·717	...	0·2084	0·2665	66·43	16·906	15·630	K × 0·07412	K × 0·08015	9·9	10·6	Light breeze N.W.	9
1·335	6·882	...	0·2711	0·2898	66·05	16·263	14·682	K × 0·06845	K × 0·07405	9·88	10·7	Brisk gale N.W.	1
1·351	3·624	3·8252	0·2711	0·2898	71·73	17·195	15·623	K × 0·06474	K × 0·06959	9·88	10·6	Brisk gale N.W.	2
1·324	6·413	3·7972	0·2711	0·2898	65·48	16·342	15·098	K × 0·06810	K × 0·07373	9·88	10·8	Brisk gale N.W.	3
1·328	3·775	...	0·2711	0·2898	69·23	17·169	15·932	K × 0·06483	K × 0·06988	9·88	10·0	Brisk gale N.W.	4
1·113	5·6005	...	0·2975	...	93·3	24·616	23·325	K × 0·07146	K × 0·07551	9·6	9·0	Faint breeze from S. W.	1
1·124	4·363	4·473	0·2975	...	95·5	24·704	23·411	K × 0·07130	K × 0·07524	9·6	10·0	Light breeze from S.W.	2
1·071	5·495	4·493	0·2975	...	85·89	24·497	23·072	K × 0·07189	K × 0·07634	9·6	9·0	Faint breeze from S. W.	3
1·125	4·372	...	0·2975	...	94·34	24·502	23·204	K × 0·07188	K × 0·07590	9·6	9·6	Light breeze from S. W.	4
0·937	5·032	...	0·2881	...	68·2	24·063	23·221	K × 0·07483	K × 0·08076	8·4	8·2	Faint breeze from S.S.W.	5
0·902	3·360	4·572	0·2881	...	61·975	24·890	22·883	K × 0·07535	K × 0·08096	8·4	8·2	Light breeze from S.S.W.	6
0·932	5·045	4·530	0·2881	...	66·1	24·880	22·986	K × 0·07539	K × 0·08066	8·4	8·0	Pleasant breeze from S.S.W.	7
0·965	3·452	4·529	0·2881	...	70·012	25·043	23·303	K × 0·07489	K × 0·08047	8·4	8·0	Pleasant breeze from S.S.W.	8
1·024	5·647	4·540	0·2881	...	81·412	24·962	23·429	K × 0·07512	K × 0·08004	8·4	8·3	Pleasant breeze from S.S.W.	9
0·931	3·248	...	0·2881	...	66·462	25·083	23·196	K × 0·07478	K × 0·08085	8·4	9·0	Pleasant breeze from S.S.W.	10
1·107	3·316	...	0·4657	0·4723	75·24	...	...	...	...	...	...	Light breeze from E.	1
1·098	4·132	3·409	0·4657	0·4723	79·49	...	...	...	...	...	...	Light breeze from E.	2
1·108	3·457	...	0·4657	0·4723	75·675	...	...	...	...	...	...	Light breeze from E.	3
0·8055	3·034	...	0·4657	0·4723	49·32	...	...	...	...	...	...	Faint breeze from E.	4
0·7639	2·414	3·367	0·4723	0·4723	41·5	...	...	...	...	...	...	Faint breeze from E.	5
0·7185	2·414	...	0·4723	0·4723	40·82	...	...	...	...	...	...	Faint breeze from E.	6
...	...	...	0·4723	0·4723	54·17	...	...	...	...	...	...	Faint breeze from E., wind ahead, current favourable	7

RESULT OF EXPERIMENTS MADE WITH THE FRENCH

(A mètre is 39·37079 English inches, or 3·2808 English feet; a square

Number of the Run. A, ascending. D, descending.	Numbers of the Screws. See Table IV.	Length of each Run in Metres.	Date of Experiment.	High Speed, Medium Speed, or Low Speed.	Mean Draught of Water in Mètres.	Difference of Draught at Bow and Stern in Mètres.	Area of Immerged Midship Section in Square Mètres.	Diameter of Screw in Metres.	Number of Blades of Screw.	Intended Pitch of Screw in Mètres.	Actual Pitch of Screw in Mètres.	Intended Fraction of Pitch.	Actual Fraction of Pitch.	Multiple of Gearing.	Mean Pressure in the Boiler in Centimetres of Mercury.	Proportion of Stroke made without Expansion.
8	22	...	...	...	...	...	...	2·500	4	4·286 6·381	...	0·450	...	2·286	20·0	5-10
9	22	...	...	...	...	...	...	2·500	4	4·286 6·381	...	0·450	...	2·286	16·0	5-10
10	22	...	...	...	...	...	...	2·500	4	4·286 6·381	...	0·450	...	2·286	18·0	7-10
11	22	...	...	...	...	...	...	2·500	4	4·286 6·381	...	0·450	...	2·286	16·0	85-100
12	22	...	...	...	...	...	...	2·500	4	4·286 6·381	...	0·450	...	2·286	...	92-100
1	A	1016·5	6th Nov. 1848	High	2·530	0·700	10·3935	1·680	6	2·880	2·876	0·600	...	5·091	39·0	20-100
2	A	1016·5	6th Nov. 1848	High	2·530	0·700	10·3935	1·680	6	2·880	2·876	0·600	...	5·091	26·875	20-100
3	A	1016·5	6th Nov. 1848	High	2·530	0·700	10·3935	1·680	6	2·880	2·876	0·600	...	5·091	25·625	20-100
4	A	1016·5	6th Nov. 1848	High	2·530	0·700	10·3935	1·680	6	2·880	2·876	0·600	...	5·091	38·0	20-100
1	A	1016·5	4th Nov. 1848	Medium	2·530	0·700	10·3935	1·680	6	2·880	2·876	0·600	...	5·091	16·0	70-100
2	A	1016·5	4th Nov. 1848	Medium	2·530	0·700	10·3935	1·680	6	2·880	2·876	0·600	...	5·091	22·5	70-100
3	A	1016·5	4th Nov. 1848	Medium	2·530	0·700	10·3935	1·680	6	2·880	2·876	0·600	...	5·091	23·5	70-100
4	A	1016·5	4th Nov. 1848	Medium	2·530	0·700	10·3935	1·680	6	2·880	2·876	0·600	...	5·091	37·0	70-100
1	32	1016·5	13th Dec. 1848	Medium	2·505	0·680	10·2335	1·680	6	2·608	2·688	0·600	0·600	...	32·5	70-100
2	32	1016·5	13th Dec. 1848	Medium	2·505	0·680	10·2335	1·680	6	2·608	2·688	0·600	0·600	...	27·0	70-100
3	32	1016·5	13th Dec. 1848	Medium	2·505	0·680	10·2335	1·680	6	2·608	2·688	0·600	0·600	...	30·0	70-100
4	32	1016·5	13th Dec. 1848	Medium	2·505	0·680	10·2335	1·680	6	2·608	2·688	0·600	0·600	...	36·5	70-100
5	32	1016·5	13th Dec. 1848	Medium	2·505	0·680	10·2335	1·680	6	2·608	2·688	0·600	0·600	...	28·8	70-100
6	32	1016·5	13th Dec. 1848	Medium	2·505	0·680	10·2335	1·680	6	2·608	2·688	0·600	0·600	...	20·0	70-100
1	32	1016·5	14th Dec. 1848	Medium	2·505	0·680	10·2335	1·680	6	2·608	2·688	0·600	0·600	...	21·5	70-100
2	32	1016·5	14th Dec. 1848	Medium	2·505	0·680	10·2335	1·680	6	2·608	2·688	0·600	0·600	...	26·5	70-100
3	32	1016·5	14th Dec. 1848	Medium	2·505	0·680	10·2335	1·680	6	2·608	2·688	0·600	0·600	...	22·0	70-100
4	32	1016·5	14th Dec. 1848	Medium	2·505	0·680	10·2335	1·680	6	2·608	2·688	0·600	0·600	...	27·75	20-100
1	32	1016·5	18th Dec. 1848	High	2·505	0·680	10·2335	1·680	6	2·608	2·688	0·600	0·600	...	28·0	20-100
2	32	1016·5	18th Dec. 1848	High	2·505	0·680	10·2335	1·680	6	2·608	2·688	0·600	0·600	...	34·25	20-100
3	32	1016·5	18th Dec. 1848	High	2·505	0·680	10·2335	1·680	6	2·608	2·688	0·600	0·600	...	26·5	20-100
4	32	1016·5	18th Dec. 1848	High	2·505	0·680	10·2335	1·680	6	2·608	2·688	0·600	0·600	...	38·5	20-100
5	32	1016·5	18th Dec. 1848	High	2·505	0·680	10·2335	1·680	6	2·608	2·688	0·600	0·600	...	18·0	85-100
1	32	1016·5	19th Dec. 1848	Low	2·505	0·680	10·2335	1·680	6	2·608	2·688	0·600	0·600	...	15·0	85-100
2	32	1016·5	19th Dec. 1848	Low	2·505	0·680	10·2335	1·680	6	2·608	2·688	0·600	0·600	...	15·0	85-100
3	32	1016·5	19th Dec. 1848	Low	2·505	0·680	10·2335	1·680	6	2·608	2·688	0·600	0·600	...	14·0	85-100
4	32	1016·5	19th Dec. 1848	Low	2·505	0·680	10·2335	1·680	6	2·608	2·688	0·600	0·600	...	45·5	20-100
5	32	1016·5	19th Dec. 1848	High	2·505	0·680	10·2335	1·680	6	2·608	2·688	0·600	0·600	...	46·0	20-100
6	32	1016·5	19th Dec. 1848	High	2·505	0·680	10·2335	1·680	6	2·608	2·688	0·600	0·600	...	39·5	20-100
7	32	1016·5	19th Dec. 1848	High	2·505	0·680	10·2335	1·680	6	2·608	2·688	0·600	0·600	...	36·0	20-100
8	32	1016·5	19th Dec. 1848	High	2·505	0·680	10·2335	1·680	6	2·608	2·688	0·600	0·600	...	41·625	20-100
9	32	1016·5	19th Dec. 1848	High	2·505	0·680	10·2335	1·680	6	2·608	2·688	0·600	0·600	...		

ACCOUNT OF THE PERFORMANCE OF THE UNITED STATES SCREW PROPELLER STEAMSHIP OF WAR "SAN JACINTO."

By Chief Engineer B. F. Isherwood, U. S. Navy.

[The following very able paper, descriptive of the performance of the United States war screw steamer "San Jacinto" has been contributed by Mr. Isherwood to the "Franklin Journal," and I have taken the liberty to introduce it here with some abridgments and annotations]:—

The "San Jacinto" is one of the four steam ships of war commenced by the U. S. Government in 1847, viz. the "Powhattan," "Susquehanna," "Saranac," and "San Jacinto;" all of which, with the exception of the first named, have been completed. With the exception of the "San Jacinto," they all have the common paddle wheel. The "Saranac" and "San Jacinto" are of precisely the same dimensions and model, the intention of the government being to make the two vessels as nearly identical as possible, in order to try the relative merits of the two systems of propulsion.

In the "San Jacinto," the axis of the propeller shaft is 20 inches to port from the centre of the ship. It was the original intention to place the propeller abaft the rudder, and to notch the rudder to allow it to act without coming into contact with the shaft; but this plan having been subsequently considered objectionable, another arrangement had to be adopted.

In the new arrangement the propeller was placed next the stern post of the vessel, and a metallic rudder was curved over and abaft the propeller, being attached to the stern post above and below the propeller. The invention of this stern arrangement was made by myself and adopted by the board of Naval Engineers.*

* A similar arrangement had previously been proposed by Mr. Holm for the French war steamer "Pomone," and is represented in one of the plates of the present work.

Engines.—The engines consist of two inclined cylinders with vertical air pumps; the cross heads, being placed at the upper extremity of the cylinders, are connected to a double set of cranks by two connecting rods to each cross head. The engines are connected by drag links. The cylinders are 62½ inches diameter and 4 feet 2 inches stroke of piston. Space displacement of both pistons per stroke, 179·54 cubic feet.

Boilers.—The boilers are of copper and three in number; they contain in the aggregate 195½ square feet of grate, and 5250 square feet of heating surface. They are of the double return drop flue variety. Cross area or calorimeter of first flues, 35 square feet; of second flues, 35 square feet; of third flues, 32 square feet; area of smoke chimney, 34 square feet; height of ditto above grate, 65 feet; proportion of heating surface per cubic foot of cylinder, 17¾ square feet.

The three copper boilers of the "Saranac," which were designed by Chas. W. Copeland, contain 5127 square feet of heating surface, and 188 square feet of grate surface. The boilers of the "Saranac" are of the same length, breadth, and height as those of the "San Jacinto."

Propeller.—The propeller originally intended to have been employed was 14½ feet diameter, 4¾ feet long on axis at periphery, with an initial pitch of 35 feet, expanding to 40 feet at the posterior end. The area, viewed as a disk, was 115½ square feet. The helicoidal area was 399 square feet; number of blades, six.

SCREW STEAM PACKET "PELICAN"—*continued.*

mètre is 10·764 square feet; and a centimètre is 0·39371 English inches.)

Number of Turns of the Screw per Second.	Absolute Speed of the Vessel in Metres per Second.	Advance per Turn of the Screw in Metres.	Mean Coefficient of Slip with Intended Pitch.	Mean Coefficient of Slip with Actual Pitch.	Mean Pressure in the Cylinders in Centimetres of Mercury.	Value of $\left(\frac{p}{\frac{r}{n^2}}\right)$	Value of $\left(\frac{\frac{p-5}{r}}{n^2}\right)$	Efficiency or Utilization with p.	Efficiency or Utilization with $(p-5)$.	Mean Speed of the Vessel in Knots.	Speed shown by the Log in Knots.	State of the Wind and Sea, and Remarks.	Number of the Run. A. ascending. D. descending.
...	...	...	...	...	...	...	...	...	...	...	...	Faint breeze from E., wind ahead, current favourable.	8
...	...	...	...	...	...	...	...	...	...	...	...	Faint breeze from E., wind aft, current adverse.	9
...	...	...	...	...	...	...	...	...	...	...	...	Ditto.	10
...	...	...	...	...	...	...	...	...	...	...	...	Ditto.	11
...	...	...	...	...	...	...	...	...	...	...	...	Ditto.	12
2·425	6·015	...	0·3028	0·3011	75·187	2·5111	2·3459	K×0·06541	K×0·C7707	9·08	9·0	Pretty strong breeze from W.	1
2·330	3·511	2·010	0·3028	0·3014	67·65	2·4857	2·3043	K×0·06609	K×0·07134	9·08	9·3	Pretty strong breeze from W.	2
2·2977	5·825	2·006	0·3028	0·3011	68·71	2·6598	2·4273	K×0 06272	K×0·06765	9·08	9·0	Light breeze from W.	3
2·463	3·6697	...	0·3028	0·3011	77·0	2·4943	2·3319	K×0·06586	K×0·07043	9·08	9·2	Faint breeze from W.	4
1·791	4·381	...	0·2889	0·2879	41·925	2·5922	2·2831	K×0·06637	K×0·07536	7·37	7·0	Faint breeze from N.W.	1
1·790	3·118	2·055	0·2889	0·2879	46·40	2·8704	2·6849	K×0·06601	K×0·06726	7·37	7·0	Light breeze from N.W.	2
1·860	4·209	2·040	0·2889	0·2879	46·675	2·6659	2·3828	K×0·06401	K×0·07169	7·37	7·8	Strong breeze from N.W.	3
1·978	3·717	...	0·2889	0·2879	54·66	2·7024	2·4557	K×0·06232	K×0·06859	7·37	7·5	Brisk gale from N.N.	4
2·1095	5·616	...	0·2460	0·2671	53·225	2·1281	2·1232	K×0·07606	K×0·07415	8·21	7·8	Light airs from S.	1
2·1695	3·176	1·991	0·2460	0·2671	51·775	2·3551	2·3329	K×0·06505	K×0·07144	8·21	8·0	Light airs from S.	2
2·102	5·057	1·955	0·2460	0·2671	55·5	2·3749	2·1516	K×0 06649	K×0·07334	8·21	7·4	Almost calm.	3
2·112	3·360	1·968	0·2460	0·2671	54·0	2·3735	2·1534	K×0·06652	K×0·07331	8·21	7·8	Almost calm.	4
2·169	5·057	1·969	0·2460	0·2671	55·722	2·3740	2·1602	K×0·06392	K×0·07023	8·21	7·6	Calm.	5
2·201	3·617	...	0·2460	0·2771	55·637	2·3230	2·1183	K×0·06522	K×0·07148	8·21	8·0	Calm.	6
1·916	3·162	...	0·2551	0·2772	46·722	2·5727	2·2985	K×0·05657	K×0·06326	7·29	7·0	Pleasant gale from S.	1
1·870	4·420	1·953	0·2551	0·2772	47·687	2·6787	1·3975	K×0·05514	K×0·06160	7·29	6·8	Brisk gale from S.	2
2·010	2·972	1·934	0·2551	0·2772	50·175	2·4973	2·1967	K×0·05667	K×0·06228	7·29	7·0	Brisk gale from S.	3
1·927	4·750	...	0·2551	0·2772	47·75	2·5285	2·2642	K×0·05753	K×0·06425	7·29	7·0	Brisk gale from S.	4
2·519	5·467	...	0·2718	0·2909	69·737	2·1619	2·6076	K×0·06349	K×0·06839	9·49	8·8	Strong breeze from S.S.E.	1
2·563	4·236	1·916	0·2718	0·2909	68·575	2·1508	1·9944	K×0·06520	K×0·07043	9·49	9·0	Strong breeze from S.S.E.	2
2·569	5·465	1·903	0·2718	0·2909	73·65	2·1757	2·0285	K×0·06323	K×0·06784	9·49	9·0	Strong breeze from S.S.E.	3
2·605	4·335	1·960	0·2718	0·2909	74·475	2·1558	2·0120	K×0·06348	K×0·06865	9·49	9·5	Strong breeze from S.S.E.	4
2·616	5·646	...	0·2718	0·2909	76·35	2·1932	2·0498	K×0·06243	K×0·06681	9·49	9·0	Strong breeze from S.S.E.	5
1·617	4·236	...	0·2430	0·2612	35·725	2·6814	2·3058	K×0·05720	K×0·06652	5·93	6·0	Light airs from S.E.	1
1·656	2·285	1·971	0·2430	0·2642	35·1	2·5321	2·1765	K×0·05895	K×0·06991	5·93	6·0	Light airs from S.E.	2
1·614	4·090	1·978	0·2430	0·2642	36·05	2·7201	2·3419	K×0·05639	K×0·06546	5·93	5·8	Light airs from S.E.	3
1·634	2·426	...	0·2430	0·2642	35·7	2·6425	2·2717	K×0·05744	K×0·06680	5·93	6·0	Light airs from S.E.	4
2·696	5·465	...	0·2611	0·2875	78·712	2·1268	1·9958	K×0·06526	K×0·06969	10·0	10·0	Light airs from E.N.E.	5
2·693	4·916	1·914	0·2611	0·2875	79·75	2·1593	2·0255	K×0·06436	K×0·66886	10·0	10·0	Light airs from E.N.E.	6
2·651	5·267	1·928	0·2611	0·2875	74·1	2 0693	1·9369	K×0·06865	K×0·C7341	10·0	9·8	Light airs from E.N.E.	7
2·615	5·620	1·937	0·2611	0·2875	74·262	2·1307	1·9885	K×0·06770	K×0·07259	10·0	10·0	Light airs from E.N.E.	8
2·698	5·186	...	0·2611	0·2875	79·387	2·1440	2·0091	K×0·06484	K×0·06920	10·0	10·0	Light airs from E.N.E.	9

The propeller executed for the vessel was 14½ feet diameter, 4 feet long on axis at periphery, 4 feet long on axis at a diameter of 7½ feet, thence tapering to 2½ feet long on axis at hub, with an initial pitch of 40 feet, expanding to 45 feet at the posterior end. The area, viewed as a disk, was 65·48 square feet. The helicoidal area was 112·677 square feet; number of blades, four; space between the front edge of the propeller and the stern post of the vessel (left for the rudder), 6 feet. The probable slip of the propeller was estimated at 22 per cent.

The alteration of the relative positions of the rudder and propeller, was for the purpose of diminishing the leverage of the propeller weight on its shaft and on the stern of the vessel, as it had no outboard support. The weight of the bronze propeller, as cast and placed in the vessel, was 14,894 pounds. The weight of the Stevens' bronze propeller for the U. S. Steamship "Princeton," was 15,970 pounds. It was 14½ feet diameter, 5 feet long on axis at periphery, and composed of six blades, having a pitch of 32·44 feet.

Performance.—The "San Jacinto" being brought to a draught of 15 feet 7 inches forward, and 15 feet 9 inches aft, was tried in New York Bay, Oct. 1, 1851. She made, in running a distance of 17⅞ statute miles, taken from the chart published by the U. States Survey Office, 9·95 statute miles per hour against a strong wind on the port bow, estimated by the experienced pilot on board, as equivalent to a reduction of speed of one mile per hour. The tide was about slack at starting, but toward the close was ahead. The speed of the vessel in smooth water and a calm would therefore be 11 statute miles per hour. Mean revolutions of the screw per minute, 31.

With the initial pitch of the screw 40 feet, the slip would be as follows:

$40 \times 31 \times 60 = 74{,}400$ feet per hour = speed of screw.
$5280 \times 11 = 58{,}080$ " = speed of vessel.

$16{,}320$ " = slip of screw.

or 21·935 per cent.

With the final pitch of the screw 45 feet, the slip would be as follows:

$45 \times 31 \times 60 = 83{,}700$ feet per hour = speed of screw.
$5280 \times 11 = 58{,}080$ " = speed of vessel.

$25{,}620$ " = slip of screw.

or 30·609 per cent.

The mean slip would therefore be $\frac{21{\cdot}935 + 30{\cdot}609}{2} = 26{\cdot}27$ per cent.

The mean effective steam pressure on the pistons*, by indicator diagrams taken from top and bottom of each cylinder, was 16·29 pounds per square inch, the horse power developed by the engines would therefore be $\frac{3067{\cdot}9 \times 16{\cdot}29 \times 4\frac{1}{8} \times (31 \times 2) \times 2}{33000}$ = 782·45.

A dynamometer was fitted to the screw shaft, and gave a mean thrust of 12,815½ pounds; the power exerted in propelling the vessel would therefore be

$\frac{12815\frac{1}{2} \times 968 \text{ (speed of vessel in feet per minute)}}{33000} = 375{\cdot}92$ horses.

* By "effective pressure," as the term is here applied, Mr. Isherwood appears to mean the mean unbalanced pressure existing within the cylinder, as shown by the indicator. In this country the expression is employed to signify that pressure less 1½ lbs. which is reckoned an adequate allowance for the friction of the engine.

If we now estimate the power required to work the engines, overcome the load on the air pump, &c., at 2 lbs. per square inch of steam piston*, an estimation that will probably vary but little from the truth, we shall have 96·06 horse power absorbed in working the engines alone. Taking from Morin's experiments the friction of the load at $\frac{1}{12}$ per cent. of the power applied, and considering the power applied to be that developed by the engines, minus that absorbed in working the engines, we have for the power absorbed in the friction of the load, 51·48 horses.

Collecting the above, we have the following for the disposition of the power in the "San Jacinto."

Slip of the screw,	26·27	per cent. or	205·55	horse power.
Propelling the vessel,	48·04	,, ,,	375·92	,,
Working the engines,	12·28	,, ,,	96·06	,,
Friction of the load,	6·58	,, ,,	51·48	,,
Leaving to be absorbed in the friction of the screw surface on the water, and the direct resistance of the edges of blades, &c.,	6·83	,, ,,	53·44	,,
	100·00		782 45†	

From the above table it will be perceived that the total losses of power by the screw were, 26·27 per cent. of the total power developed by the engines in slip, and 6·83 per cent. in the friction of the screw surface in the water, &c., making 33·1 per cent.

It may be supposed that the slip of the "San Jacinto's" screw was too great for the best economical effect, and that if greater surface had been given to it, a better result would have followed. This opinion, though plausible, is not sustained by experiment. The best proportioned screws, ascertained from a trial of many, for giving the highest speeds of vessel, were found in the small experimental vessels, "Archimedes" and "Dwarf," to have slips of 25 and 30½ per cent. The screw giving the highest result in the experimental vessel, "Napoleon," had also a slip of 25 per cent.; which was likewise about the slip of the screw giving the best result in the "Rattler."‡

In using any propelling instrument for the transmission of power, a portion of that power is unavoidably lost in misapplication. In the common paddle wheel, this misapplication consists in giving a retrograde motion, in a direction parallel to the vessel, to the water acted on by the paddles, termed slip, and in a vertical depression and lifting of the water, termed oblique action — the total losses by the paddle wheel being the sum of the losses by slip and oblique action. In the screw, there is the same loss by slip; but the loss by oblique action, which does not exist with the screw, is replaced by another, viz., that of the friction of the screw surface on the water. The total losses by the screw would then be the sum of the losses by slip and friction.

It has been ascertained by experiment, that the friction of solid surfaces on water is directly as the surface and as the square of its velocity.§ In the same screw, then, with equal velocities, the friction is as the surface: but the slip is by no means as the surface, but in a far less proportion, to be ascertained only by experiment. The only reliable experiments made with this view, that I am in possession of, are those by Bourgois, made by order of the French Government; and one of them is nearly a parallel case to the originally proposed and actually executed screws of the "San Jacinto." Bourgois tried a screw of 6 blades, having a surface of $\frac{6}{7}$ths of the area of the diameter of the screw, viewed as a disk. The slip obtained was 37 per cent. Two of the blades were now omitted, and the remaining four placed equidistant. The screw in this state was composed of 4 blades, having a surface of $\frac{4}{7}$ths of the area of the diameter, viewed as a disk; the slip was now found to be $38\frac{1}{10}$ per cent., or only $1\frac{1}{10}$ per cent. more than before. This experiment was pushed still further by the reduction of another blade, leaving the screw composed of 3 blades, with a surface of $\frac{3}{7}$ths of the disk; the slip now obtained was $41\frac{8}{10}$ per cent., or only $4\frac{8}{10}$ per cent. more than the first slip; showing that a reduction in the surface of one-half, only increased the slip from 37 to $41\frac{8}{10}$ per cent., or $11\frac{1}{2}$ per cent. of the last slip.

Supposing now the screw as originally proposed for the "San Jacinto," had been used, having about $1\frac{3}{4}$ths the projected, and $3\frac{1}{2}$ times the helicoidal surface of the one actually used; and supposing the increased projected surface had decreased the slip in the above proportion of $11\frac{1}{2}$ per cent., or $3_{\frac{3}{100}}$ per cent. of the actual slip of the "San Jacinto's" screw: there would then have been obtained a slip of $(26_{\frac{27}{100}} - 3_{\frac{03}{100}})$ $23\frac{1}{2}$ per cent. But the helicoidal surface having been increased $3\frac{1}{2}$ times, the friction would also have been increased in nearly that proportion; and as we see the friction with the present surface amounts to $6_{\frac{83}{100}}$ per cent., it would have amounted with the $3\frac{1}{2}$ times surface to $23\frac{8}{10}$ per cent, supposing the total power developed by the engine to have remained the same, in which case the available power for the propulsion of the vessel would have been diminished by $(23\frac{8}{10} - 6_{\frac{83}{100}})$ $17_{\frac{7}{100}}$ per cent., and increased $3_{\frac{2}{100}}$ per cent. by the lessened slip, leaving a balance of diminution of $(14_{\frac{7}{100}} - 3_{\frac{2}{100}})$ $17_{\frac{5}{100}}$ per cent. of the available power for propulsion; and as the speed of the vessel is in proportion to the cube roots of the powers applied, the speed would have been to the present speed in the proportion of $\sqrt[3]{1·000}$ to $\sqrt[3]{0·855}$; or, instead of being 11 statute miles per hour, would have been 10·44 statute miles per hour, always supposing the engines to develope the same power. The sum of the losses, then, of the proposed screw would have been $(23_{\frac{25}{100}} + 23\frac{9}{10})$ $47_{\frac{15}{100}}$ per cent., instead of $33\frac{1}{10}$ per cent., the sum of the losses by the present screw. The present screw is therefore more economical by $14_{\frac{2}{100}}$ per cent. of the power, without reckoning the practical advantages of decreased weight and cost of manufacture.

The screw proposed by the board of Naval Engineers, and used in the "San Jacinto," has not the proportions they would have adopted had they been designing the entire machinery of the vessel; but the engines, boilers, and stern of the ship having been completed before their labours began, they had only to adopt the best screw that existing conditions permitted. A longer screw was impracticable with the stern of the vessel as built, and the surface was limited in that direction; more than four blades of the same length would have given more surface, but that surface would have been nearly useless, as the blades would have been so close together as to prevent the access of water of sufficient solidity, besides having the additional resistance of the additional edges of the blades. Nor could increased surface be obtained by lessening the pitch; for such was the complex design of the engines, the multitude of its connexions and moving parts, that it was unsafe to work them up to a speed that would be necessary, with a reduced pitch, to give the vessel the proper speed; in addition to which, the boilers would not have supplied steam enough for the increased number of revolutions.

Hull.— The "San Jacinto" is 203 feet long on keel, 210 feet long at load line, 215 feet long between perpendiculars, and 237 feet extreme length. The beam moulded is 37 feet, extreme 38 feet. Depth of hold $23\frac{1}{2}$ feet. Deep load draft $16\frac{3}{4}$ feet. Depth of keel and false keel 15 inches.

Displacement in tons of 2240 lbs., at launching draft of 10½ feet, 1080.					
,,	,,	,,	$11\frac{1}{2}$ feet draft,	1156 tons and 1764 lbs.	
,,	,,	,,	$13\frac{1}{2}$,,	1489 ,,	1212 ,,
,,	,,	,,	$14\frac{1}{2}$,,	1838 ,,	1658 ,,
,,	,,	,,	$16\frac{1}{2}$,, (load draft)	2150 ,,	
,,	,,	,,	$17\frac{1}{2}$,,	2202 ,,	2055 ,,
,,	,,	,,	per inch of draft at load line,	17 1-3rd.	
Area of immersed amidship section at $11\frac{1}{2}$ feet draught,				273·81 square feet.	
,,	,,	,,	$13\frac{1}{2}$,,	346·55 ,,	
,,	,,	,,	$15\frac{1}{2}$,,	420·05 ,,	
,,	,,	,,	15 2-3rds.	438·56 ,, *	
,,	,,	,,	$16\frac{1}{2}$,,	472·05 ,,	
,,	,,	,,	$17\frac{1}{2}$,,	496·05 ,,	

The San Jacinto is barque rigged, and spreads 16,500 square feet of canvas.

The data furnished by the trial trip of the "San Jacinto," may be made available in determining *à priori* the friction of any other screw of known dimensions and revolutions per minute. We have seen that the friction of the screw of the "San Jacinto" amounted to 53·44 horse power; supposing the balance of the total power

* This is more than a sufficient allowance for ordinary engines.

† The loss by friction in this vessel is very considerable. If the area of each cylinder be 3067·9 square inches, the area of the two will be 6135·8 square inches, and this multiplied by the pressure of 16·29 lbs. gives a total load on the pistons of 99,952 lbs. This load moves through a space of 8·33 feet every revolution, which is equivalent to 18,502 lbs. moved through 45 feet. If, therefore, the engines and screw moved without friction, the thrust exhibited by the dynamometer would be 18,502 lbs. But it is found by experiment to be only 12,815¼ lbs. and the difference is lost mainly by friction. This is a loss of $\frac{1}{3·23}$ of the engine power, or a loss of 240 horses; and if besides this there is a loss of 205·5 horses from slip, the total loss is 445·5 horses, leaving only 336·95 horses for the propulsion of the vessel.

‡ In the table of experiments upon the "Rattler," given at page 133, it will be seen that the highest speed was attained when the slip was about 10 per cent.

§ By Beaufoy's experiments more nearly as the 1·7th power. See page 99.

* Taking the area of immersed section at 438 square feet, the resistance per square foot is 29·2 lbs. which shows that the vessel cannot be of very good shape.

developed by the engines, after deducting for the "slip of the screw," for "propelling the vessel," for "working the engines," and for the "friction of the load," to be absorbed in the friction of the helicoidal surface on the water; the direct resistance of the edges of the blades being probably but small, as they were sharply chamfered. The screw surfaces were rubbed smooth. In order to make these data applicable to other screws, the expression for friction must be reduced to some unit of weight, acting with a given speed on some unit of surface. The pound avoirdupois, 10 feet per second, and the square foot, are the most convenient for our purpose.

From many experiments, it appears that the law regulating the quantity of friction of solids on fluids, is different from that regulating the quantity of friction of solids on solids, and instead of being proportional to pressure and velocity, is proportional to pressure, surface, and the square of the velocity. Assuming these hypotheses to be correct, we will determine the value of the friction of 1 square foot of helicoidal surface, moving with the velocity of 10 feet per second, from the data of the "San Jacinto," premising that as every helix of a helicoidal surface, from axis to periphery, is of a different length, increasing as the periphery is approached, and as each helix moves through its length per revolution of the screw, and as all the helices perform the same number of revolutions in the same time, it follows, that each helix will have a different velocity; and taking a helix to represent an infinitely narrow surface of the helicoid, it also follows that these different surfaces normal to the helices will have different frictions, in the proportion of the squares of velocities and the areas of the surfaces. It is then necessary to ascertain the velocities and areas of these surfaces. The problem can be solved approximately, geometrically, with but little trouble, and with more than sufficient accuracy for practical purposes. By this method, the surface of the screw projected on a plane at right angles to the axis, that is, considered as a disc, is divided by concentric circles into any number of rings or *elements*; and the greater the number of elements taken, the closer the result approximates to the truth. The centre line of each element is taken as the length of the element, and is determined as follows:

The development of a helix upon a plane is the hypothenuse of a right angled triangle, whose base is the circumference normal to the distance of the helix from the axis considered as a radius, and whose height is the pitch. We have, therefore, the base and height of a right angled triangle given, to find the hypothenuse, and the hypothenuse or helix multiplied by the breadth of the element gives its area.

We have now all the quantities for the calculation excepting the pounds avoirdupois per square foot of surface for the speed of 10 feet per second. This we obtain by representing the unknown weight by x, and making the calculations with it for each element; then summing up the column so obtained, and dividing by 33,000, we obtain the expression in horse power x. Making these calculations on the screw of the "San Jacinto," and returning to the data furnished by that vessel, when the friction of the helicoidal surfaces is given at 53·44 horse power, we ascertain, by dividing 54·44 by the horse power multiplied by x as above obtained, the unknown weight in pounds avoirdupois — observing that the helicoidal surface must be taken for *both* sides of the screw. In this manner the friction of 1 square foot of helicoidal surface moving in its helical path with a velocity of 10 feet per second, is determined from the data of the "San Jacinto," to be 0·6195 pounds avoirdupois. An examination of the subjoined table will explain the *modus operandi* without any further illustration.

Pitch.	Radii of Elements.	Circumferences normal to Radii of Elements.	Lengths of Screw in Direction of Axis at Radii.	Fractions of Pitch used.	Lengths of Elements for One Convolution of Thread.	Lengths of Elements used.	Breadth of Elements.	Helicoidal Surfaces of Elements.	Speeds of Elements per Sec.	Speeds of Elements per Min.	Friction, *both* Sides of Screw.
A	B	C 2 B × 3·1416	D	E $\frac{D \times 4}{A}$	F $\sqrt{(A^2 + C^2)}$	G F × E	H	I G × H	J $\frac{K}{60}$	K F × 31	L $\frac{J^2}{10^2} \times K \times 2\ I$
Feet.	Feet.	Feet.	Feet.		Feet.	Feet.	Feet.	Sq. Feet.	Feet.	Feet.	× 0·6195 lbs.
42·5	1·27	7·980	2·500	0·235	43·243	10·162	0·208	2·114	22·342	1340·53	17526·584
„	1·50	9·425	2·542	0·239	43·532	10·404	0·250	2·601	22·491	1349·49	21998·817
„	1·75	10·995	2·666	0 251	43·898	11·018	„	2·754	22·680	1360·84	23885·132
„	2·00	12·566	2·833	0·267	44·317	11·833	„	2·958	22·897	1373·83	26397·329
„	2·25	14·137	2·958	0·278	44·790	12·452	„	3·113	23·141	1388·49	28678·365
„	2·50	15·708	3·125	0 294	45·310	13 321	„	3·333	23·410	1404·61	31788·155
„	2·75	17·278	3·250	0·306	45·881	14·040	„	3·510	23·705	1422·31	34757·853
„	3·00	18·849	3·416	0·321	46·492	14·924	„	3·731	24·021	1441·25	38443·072
„	3·25	20·420	3·583	0·337	47·150	15·890	„	3·972	24·361	1461·65	43928·101
„	3·50	21·991	3·750	0·352	47·845	16·841	„	4·210	24·720	1483·20	47276·820
„	3·75	23·562	3·833	0·361	48·594	17·542	„	4·386	25·107	1506·41	51602·739
„	4·00	25·132	4·000	0·376	49·374	18·565	„	4·641	25·510	1530·59	57274·720
„	4·25	26·703	„	„	50·192	18·872	„	4·718	25·932	1559·95	62020·623
„	4·50	28·274	„	„	51·045	19·193	„	4·798	26·373	1582·40	65427·253
„	4·75	29·845	„	„	51·932	19·526	„	4·881	26·831	1609·89	70089·053
„	5·00	31·416	„	„	52·850	19·872	„	4·968	27·306	1638·35	75192·741
„	5·25	32·986	„	„	53·800	20 229	„	5·057	27·797	1667·80	80742·842
„	5·50	34·557	„	„	54 768	20·593	„	5·148	28·297	1697·81	86712·096
„	5·75	36·128	„	„	55·817	20·987	„	5·247	28·839	1730·33	93549·518
„	6·00	37·699	„	„	56·815	21·862	„	5·341	29·354	1761·26	100427·393
„	6·25	39 270	„	„	57·865	21·757	„	5·439	29·897	1793·82	108049·968
„	6·50	40·840	„	„	58·946	22·164	„	5·541	30·455	1827·32	116356·658
„	6·75	42·411	„	„	60·040	22·575	„	5·644	31·021	1861·24	125248·404
„	7·00	43·982	„	„	61·160	22·996	„	5·749	31·599	1895·96	134846·379
„	7·25	45·550	„	„	62·298	23·424	„	5·856	32·187	1931·24	145167·621
„	7·431	46·690	„	„	63·136	23·937	0·125	2·967	32·620	1957·22	76559·049
							Helicoidal Area of Screw	112·677	- -	- -	1763947·285

$\frac{1763947·285}{33000} = 53·45$. $\frac{J^2}{10^2} \times K \times 2\ I \times x = 2847372·54\ x$; and $\frac{2847372·54\ x}{33000} = 86·284\ x$; and as $86·284\ x = 53·44$, $x = 0·6195$.

SCREW AND PADDLE VESSELS ON THE ATLANTIC.

A good deal of controversy has been carried on at Liverpool as to the comparative merits of the screw and paddle steamers upon the Atlantic — a question which, it is considered, involves the wider question of the relative efficiency of screw and paddle vessels for the general purposes of ocean voyaging. On one occasion the "Frankfort" screw steamor proceeding to the Mediterranean, passed the "America" paddle steamer, proceeding to New York, although the "America" is a vessel of 1880 tons, builder's measurement, and 750 horses power; while the "Frankfort" is a vessel of 657 tons burden, builder's measurement, and 100 horses power. On other occasions, some of the screw vessels plying between Liverpool and New York have made as rapid passages, or nearly so, as some of the paddle vessels on the same line, although the paddle vessels are of much greater power. From these incidents it has been inferred by some persons that the screw is a superior propeller to the paddle in the case of ocean vessels. This inference, however, has been rejected in other quarters, and the partizans of each instrument of propulsion have displayed much zeal in vindicating its special pretensions. After a good deal of skirmishing in the Liverpool papers, Messrs. Richardson, the representatives of the city of Glasgow and city of Manchester screw ships, considering that the reputation of screw vessels had been disparaged by some remarks that had recently appeared, published in the Liverpool Albion, the log of the "City of Manchester," accompanied by some remarks pointing out the superiority of that vessel to the "Niagara," a paddle vessel, which had performed the Atlantic voyage about the same time. This statement immediately drew forth a counter statement from Messrs. McIver, on the part of the paddle vessels, in which they at once admitted, that, under special and exceptional circumstances, a screw vessel of small power might outstrip in speed a paddle vessel, since under such circumstances that has been done by a common sailing ship, without the aid of steam power at all; but they added, that it was impossible to deduce from such accidental occurrences any sound conclusion as to the comparative efficiency of the two modes of propulsion. They consequently give a comparative statement of the speeds realised by the screw and paddle vessels respectively, during a series of voyages. The respective sratements of the two parties I here introduce in parallel columns: —

(From the Liverpool Albion, of Monday, April 19.)

THE SCREW STEAM-SHIP CITY OF MANCHESTER.

The Liverpool and Philadelphia Steam-ship Company's steam-ship City of Manchester, Captain Robert Leitch, arrived in the Mersey, from Philadelphia, at nine p. m. on Friday, the 16th, with seventy-seven passengers and a very full cargo. An opportunity for comparison has offered on this voyage between screw and paddle steamers, both to the westward and eastward. On her outward voyage, she left Liverpool exactly twelve hours before the Royal Mail steam-ship Niagara, and delivered her letters in Philadelphia on the same day, they having gone the whole distance by water, and the Niagara's mails having been sent from Boston by railway. On the homeward passage, the City of Manchester brings three days later Philadelphia newspapers and letters than the Niagara, and entered the Mersey exactly three days after her. The passages, both outwards and homewards, being, as nearly as possible, at the same rate of speed; if anything, in favour of the City of Manchester. The City of Manchester had 1100 tons of cargo, weight and measurement, on board on her arrival at Philadelphia; and had 1200 tons weight of cargo on board on her arrival at Liverpool, the Niagara coming home in ballast. According to Government returns, the Niagara is a paddle-steamer of 1850 tons builder's measurement, 1008 tons register, and 750 horse-power. The City of Manchester is a screw-steamer of 2125 tons builder's measurement, 1309 tons register, and 350 horse-power. An abstract of the City of Manchester's log is subjoined: —

April 1. — Wind southward. 9 15 a. m., cast off and backed out from wharf; 1 p. m., passed Newcastle; 8, discharged pilot; 9 20, Cape Henlopen Light west 3 miles.

2. — Wind southward. Lat. 39° 4′ N., obs.; lon. 72° 20′ W., obs. Light winds, with fine weather. Distance run, 130 miles from Cape Henlopen.

3. — Wind S.W. to N.W. Lat. 45° 5′ N., obs., lon. 67° W., obs. Brisk gales, with squally weather. Distance run, 254 miles.

4. — Wind N.N.W. Lat. 39° 47′ N., acc.; lon. 61° 15′ W., acc. Strong gales, with severe squalls and high topping sea. Distance run, 260 miles.

5. — Wind northward. Lat. 39° 26′ N., acc.; lon. 56° 9′ W., obs. Strong gales, with high sea running. Distance run, 240 miles.

6. — Wind northward. Lat. 40° 13′ N., obs.; lon. 51° 30′ W., obs. Fresh gales and squally. Distance run, 220 miles.

7. — Wind N.E. to S.E. Lat. 41° 36′ N., obs.; lon. 48° 4′ W., obs. Fresh gales and squally, with head sea. Distance run, 176 miles.

8. — Wind S.E. to N.W. Lat. 43° 13′ N., acc.; lon. 43° 3′ W., acc. Strong gales, with rain and high sea. Distance run, 234 miles.

9. — Wind N.N.W. Lat. 44° 50′ N., acc.; lon. 37° 30′ W., acc. Strong winds and weather. Distance run, 260 miles.

10. — Wind N.N.W. Lat. 46° 18′ N., acc.; lon. 32° 16′ W., acc. Strong winds and weather. Distance run, 236 miles.

11. — Wind northward. Lat. 46° 44′ N., obs.; lon. 27° 41′ W., obs. First part fresh gales, latter part light and variable. 6 40 p. m., spoke British ship Lady of the West, from Alexandria for Liverpool, 22 days out. Distance run, 196 miles.

12. — Wind southward. Lat. 48° 38′ N., obs.; lon. 22° 57′ W., obs. Fresh winds, with cloudy weather. 4 p. m., passed Bremen barque showing flag with No. 189. Distance run, 222 miles.

13. — Wind southward. Lat. 50° 47′ N., obs.; lon. 16° 57′ W., obs. Fresh winds, with cloudy weather. Distance run, 267 miles.

14. — Wind S.S.E. Lat. 50° 50′ N., obs.; lon. 11° 59′ W., obs. Fresh winds, with head sea. Distance run, 190 miles.

15. — Wind S.S.E. Lat. 51° 41′ N., obs.; lon. 7° 56′ W., obs. Fresh winds and sea. 2 a. m., Cape Clear Light N.E. ½ E. 12 miles. Noon, abreast Ballycotton Island; 7 30 p. m., passed Saltee Light Vessel; 10 30, Tuskar bore W.N.W. Distance run, 160 miles.

16. — Wind southward and eastward. 10 a. m., Holyhead E. by S.; 2 30 p. m., passed Skerries; 3 30, took pilot on board off Lynas Point; 9 15, passed the Rock.

(From the Liverpool Mercury, of Tuesday, April 20.)

PADDLE-WHEEL *versus* SCREW STEAMERS.

As even sailing ships, under favourable circumstances, may, once in a time, equal the speed of the best ocean steamers, so is it quite possible for any large-sized screw, of even small engine power, to do almost as much once in the twelve months; but "an opportunity for comparison has offered on other voyages (besides the one noted above) between screw and paddle steamers, both to the eastward and westward," as the following statement of the passages of the Cunard steamers and the Liverpool and Philadelphia *screws* very plainly illustrates: —

PASSAGES TO THE WESTWARD.

Vessel's Name.	For	Date of Sailing.	Date of Arrival.	Passage about
		1850.	1851.	D. H.
City of Glasgow	Philadelphia	Dec. 11.	Jan. 2.	22 0
			1850.	
Africa	New York	Dec. 7.	Dec. 22.	14 17
		1851.	1851.	
City of Glasgow	Philadelphia	Feb. 12.	Mar. 3.	18 18
Europa	Boston	Feb. 15.	Feb. 28.	13 0
City of Glasgow	Philadelphia	April 16.	May 4.	18 0
Asia	New York	April 12.	April 23.	10 22
City of Glasgow	Philadelphia	June 18.	July 7.	19 0
Africa	New York	June 21.	July 2.	11 3
City of Manchester	Philadelphia	July 26.	Aug. 13.	18 6
Europa	Boston	July 26.	Aug. 5.	10 12
City of Glasgow	Philadelphia	Aug. 13.	Aug. 30.	17 6
Asia	New York	Aug. 16.	Aug. 28.	12 9
City of Manchester	Philadelphia	Sept. 17.	Oct. 3.	16 6
Africa	New York	Sept. 13.	Sept. 24.	10 23
City of Glasgow	Philadelphia	Oct. 8.	Oct. 28.	20 3
Niagara	New York	Oct. 11.	Oct. 25.	14 0
City of Manchester	Philadelphia	Nov. 5.	Nov. 20.	15 6
Africa	New York	Nov. 8.	Nov. 19.	11 8
			1852.	
City of Pittsburgh	Philadelphia	Nov. 29.	Jan. 11.	43 0
			1851.	
Niagara	Boston	Nov. 29.	Dec. 13.	13 16
City of Glasgow	Philadelphia	Dec. 10.	Jan. 1.	22 0
Europa	New York	Dec. 6.	Dec. 23.	16 23
			1852.	
City of Manchester	Philadelphia	Dec. 31.	Feb. 9.	40 0
		1852.		
Asia	New York	Jan. 3.	Jan. 16.	13 12
City of Glasgow	Philadelphia	Feb. 4.	Feb. 24.	20 10
Canada	New York	Jan. 31.	Feb. 18.	17 21
City of Manchester	Philadelphia	Mar. 5.	Mar. 20.	15 1
Asia	New York	Feb. 28.	Mar. 12.	12 23

PASSAGES FROM THE WESTWARD.

Vessel's Name.	From	Date of Sailing.	Date of Arrival.	Passage about
		1851.	1851.	D. H.
City of Glasgow	Philadelphia	Jan. 16.	Jan. 30.	13 16
Niagara	Boston	Jan. 15.	Jan. 27.	12 6
City of Glasgow	Philadelphia	Mar. 15.	Mar. 31.	15 12
Europa	Boston	Mar. 12.	Mar. 23.	11 0
City of Glasgow	Philadelphia	May 15.	May 31.	15 18
Niagara	Boston	May 14.	May 25.	10 12
City of Glasgow	Philadelphia	July 17.	Aug. 1.	14 18
Africa	New York	July 16.	July 26.	10 5
City of Manchester	Philadelphia	Aug. 28.	Sept. 14.	17 6
Africa	New York	Aug. 27.	Sept. 6.	10 6
City of Glasgow	Philadelphia	Sept. 11.	Oct. 1.	20 6
Asia	New York	Sept. 10.	Sept. 21.	10 19
City of Manchester	Philadelphia	Oct. 9.	Oct. 23.	14 3
Africa	New York.	Oct. 8.	Oct. 19.	10 9
City of Pittsburgh	Philadelphia	Oct. 27.	Nov. 16.	19 12
America	Boston	Oct. 29.	Nov. 9.	11 5
City of Glasgow	Philadelphia	Nov. 6.	Nov. 23.	17 1
Niagara	New York	Nov. 5.	Nov. 18.	12 12
City of Manchester	Philadelphia	Dec. 4.	Dec. 20.	15 6
Africa	New York	Dec. 3.	Dec. 14.	11 3
		1852.	1852.	
City of Glasgow	Philadelphia	Jan. 8.	Jan. 23.	15 0
Canada	Boston	Jan. 7.	Jan. 18.	10 16
City of Manchester	Philadelphia	Feb. 24.	Mar. 12.	17 0
Canada	New York	Feb. 25.	Mar. 8.	11 17
City of Glasgow	Philadelphia	Mar. 4.	Mar. 23	18 18
Cambria	Boston	Mar. 3.	Mar. 16.	12 17
City of Manchester	Philadelphia	April 1.	April 16.	15 6
Niagara	Boston	Mar. 31.	April 13.	13 4

It is objected to Messrs. McIver's statement by Messrs. Richardson, that although it may correctly express the speed of the vessels from port to port, it nevertheless conveys an erroneous impression as to the comparative speeds realized by the several vessels; for that as Philadelphia, which forms the western terminus of the screw vessels, is situated on the river Delaware, at a distance of 110 miles from the sea, the approach to it is, at times, much obstructed by fogs and ice, the detentions arising from which are counted in Messrs. McIver's statement, as if they arose from the deficient speed of the screw vessels. On one occasion, they say, the screw vessel was frozen up for 20 days, and it is clear that such a detention should not be counted as a part of the voyage. For purposes of comparison, therefore, they maintain that instead of taking the voyage as terminating at Philadelphia, it should be taken as terminating at the Capes of the Delaware, so as to be cleared of the obstructions of the river, since from obstructions of this kind the voyage to New York is free. The distance from Liverpool to New York they reckon at about 3020 miles, the distance from Liverpool to the Capes of the Delaware at about 3140 nautical miles, and the distance from Liverpool to Philadelphia at about 3250 nautical miles. Adopting this mode of estimation they reckon the duration of several voyages of the screw vessels to be as follows: —

	Left Liverpool.	Arrived at Capes of Delaware.	Duration of Voyage about
City of Manchester	Nov. 5th 1851. 11 15 a.m.	Nov. 19th 1851. noon.	14 days 5 hours 45 min.
City of Glasgow	Dec. 10th „ 5 45 p.m.	Dec. 30th „ 11 30 p.m.	20 „ 15 „ 45 „
City of Manchester	Dec. 31st „ 2 15 p.m.	Jan. 20th „ 10 p.m.	20 „ 12 „ 45 „
City of Glasgow	Feb. 4th 1852. 10 50 a.m.	Feb. 24th 1852. 5 30 a.m.	19 „ 23 „ 40 „
City of Manchester	March 5th „ midnight.	March 20th „ 8 40 a.m.	14 „ 3 „ 40 „
			5)89 „ 13 „ 35 „
		Average	17 „ 21 „ 55 „

The voyages performed by the paddle steamers about the same time appear to be as follows; excluding, however, the voyage of the "Europa," on the 6th December, 1851, and the voyage of the "Niagara," on the 17th January, 1852, on which occasions the vessels had to put into Halifax for coal: —

	Left Liverpool	Arrived at New York.	Duration of Voyage about
Africa	November 8th, 1851	November 19th, 1851	11 days 8 hours.
America	November 22nd „	December 5th „	13 „ 15 „ 35 min.
Africa	December 20th „	January 2nd, 1852	13 „
Asia	January 3rd, 1852	January 16th „	13 „ 12 „
Canada	January 31st „	February 18th „	17 „ 22 „ 45 „
Africa	February 14th „	February 28th „	14 „ 1 „
Asia	February 28th „	March 12th „	13 „ 0 „ 30 „
			7)96 „ 11 „ 50 „
		Average	13 „ 18 „ 41 „

Now an average time of 13 days, 18 hours, and 41 minutes, in performing a voyage of 3020 nautical miles, gives a progress per day of 219·168 nautical miles, or 9·132 knots per hour; and an average time of 17 days, 21 hours, and 55 minutes, in performing a voyage of 3140 nautical miles, gives a progress of 175·321 nautical miles per day, or 7·30504 knots per hour. From this comparison the paddle vessels appear to be somewhat less than 2 knots an hour faster than the screw vessels, which is about the result that might have been expected, looking to the comparative size and power of the two classes of ships. The size and power of the several vessels is as follows: —

	Register Tonnage.	Builder's Tonnage.	Nominal Horse Power.
Africa	1216	2200	800
Asia	1214	2200	800
America	984	1850	750
Europa	1010	1850	750
Niagara	1008	1850	750
Canada	1001	1850	750
City of Glasgow	1087	1609	310
City of Manchester	1309	2125	380

It appears from this enumeration of dimensions, that the screw vessels are of about the same size as the paddle vessels, and of about half the power, or of about half the proportion of power to tonnage; the average proportion of power to tonnage of the screw vessels being as 1 to 5·4, while in the paddle vessels the average proportion of power to tonnage is as 1 to 2·56. Adopting the supposition, therefore, that the screw vessels are similar vessels to the paddle vessels, but of half the power, and that the screw vessels realize an average speed of 7·3 knots on the outward Atlantic voyage, that the paddle vessels realize an average speed of 9·132 knots on the outward Atlantic voyage, and that the engines in both cases work with equal efficiency, there is certainly nothing in the result arrived at to warrant the conclusion that the screw is a superior instrument of propulsion to the paddle, or that what is done by the screw vessels would not be equally well done by paddle vessels of the same power. The power necessary to propel vessels of any class, whether with screws or paddles, varies nearly as the cube of the speed; or, in other words, the speed varies as the cube root of the power. If, therefore, such vessels as the Cunard vessels, which now maintain an average outward speed of 9·132 knots per hour, were to be propelled by engines of half the power, or were to be provided with engines of the same power as those in the screw vessels, the speed would be diminished in the proportion of the cube root of 2 to the cube root of 1, or in the proportion of 1·256 to 1. In other words, the speed, instead of being 9·132 knots per hour, would be 7·27 knots per hour, which is about the same as the existing speed of the screw vessels. Contrariwise, if the existing power of the screw vessels, which now maintain an average outward speed of 7·3 knots per

hour, were to be doubled, the speed would be increased in the proportion of the cube root of 2 to the cube root of 1, or in the proportion of 1·256 to 1. In other words, the screw vessels, if provided with the same power as the paddle vessels, would maintain a speed of 9·198 instead of the speed of 9·132, at present maintained by the paddle vessels. It is quite clear, therefore, that the experience of Atlantic voyaging only shows that the screw and common radial wheel are about equally efficient as propellers, a conclusion which had been previously arrived at from the results of other trials in which the dimensions of the vessels and engines were precisely the same.

But the screw has certain special advantages, and also certain special disadvantages, which it will be proper to enumerate. And, in the first place, when a steam vessel is starting on a long voyage she is necessarily deeply immersed from the large quantity of coal she has to carry, and under such circumstances a screw will operate much more advantageously than paddles. As vessels are increased in size, however, the variations in the immersion will be diminished, and the wheels being of larger diameter, moreover, in the larger vessels, it will follow that any given variation will have a smaller deranging effect. The screw admits more readily than the paddles of the full use of sails; but in the case of large vessels, which are not much listed over by the wind, the difference in this respect between the two classes of vessels will not be considerable. The paddle wheels resist the propensity of the vessel to roll, and screw vessels of the same form will roll more than paddle vessels; but this inconvenience may be prevented by the use of bilge pieces, or by giving a suitable configuration to the vessel's bottom. The main defect of screw vessels, however, is that when steaming head to wind, the screw revolves with nearly the same velocity as if no extra impediment had to be encountered; whereas, in the case of paddle vessels, the number of revolutions of the engines diminishes nearly in the same proportion as the speed of the vessel. It follows from this peculiarity that a screw vessel consumes nearly the same quantity of coals per hour in a strong adverse wind as in a calm; whereas, in a paddle vessel, there is much less steam and fuel consumed in strong head winds, in consequence of the diminished speed of the engines on those occasions. Screw vessels must consequently carry a greater reserve of coals than paddle vessels, since a strong head wind may at any time be encountered; and this circumstance gives screw vessels a marked inferiority to paddle vessels in all cases in which strong head winds have to be met. This defect of screw vessels I do not consider insuperable. On the contrary, I believe that it is capable of being remedied; and, when remedied, I believe that screw vessels, if otherwise suitably constructed, will be found superior to paddle vessels in every respect. But at the present moment I do not know of any screw vessel that is not subject to this weighty disparagement, and its existence gives a superiority to paddle vessels in all cases of ocean transport, in which a large quantity of coal has to be carried, and in which a high rate of speed has to be maintained.

COMPARISON OF THE RESULTS OBTAINED FROM THE SCREW OF THE "SAN JACINTO," AND THE PADDLE-WHEEL OF THE "SARANAC."

By Chief Engineer B. F. Isherwood, U. S. Navy.

Since writing my remarks on the "San Jacinto," page xxii., I have obtained the log of the sister steamer "Saranac," which enables me to make a comparison between the results obtained from the paddle-wheel of that vessel, and the screw of the "San Jacinto."

During the passage of the "Saranac" from Norfolk, Va., to New York, Oct. 15th, 16th, and 17th, 1850, the mean speed for 31 hours was 9·13 knots by log; revolutions of the wheels, 14·64 per minute; steam pressure in boilers per gauge, 13⅛ lbs. per square inch; vacuum in condenser per gauge, 27 inches; throttle one-fourth open; cut off at 3½ feet from commencement of stroke; smooth sea and *very* light breeze ahead. Mean draft of vessel, 15 feet 9 inches. Two inclined engines, cylinders 60 inches diameter, by 9 feet stroke.

Common paddle-wheel, 28 feet diameter, 22 paddles in each wheel; each paddle 9 feet by 30 inches; immersion, lower edge of paddle 4¼ feet.

The mean effective pressure in the cylinder, taken under the above conditions, was 15·5 lbs. per square inch. The horse power developed by the engines would therefore be

$$\frac{(2827{\cdot}44 \times 15{\cdot}5 \times (9 \times 2) \times 14{\cdot}64) \times 2}{33000} = 699{\cdot}92.$$

Taking the knot at 6082⅔ feet, as used in the British Navy, 9·13 knots would be 10·518 statute miles. Taking the cubes of the speeds as the measure of the effects produced, and the indicated horse power as the cost of propulsion, and reducing to proportionals, we shall have

	Powers.	Effects.
"San Jacinto"	1·1291	1·1438
"Saranac"	1·0000	1·0000

$$\frac{1{\cdot}1438}{1{\cdot}1291} = 1{\cdot}0130;$$

and

that is to say, the application of the power with the *screw* in the "San Jacinto" was more efficient than with the paddle-wheel in the "Saranac," in the proportion of 1·0130 to 1·0000; or the two systems, in these particular cases, may be considered as equally good.

The slip of the centre of reaction of the "Saranac's" paddle-wheel was 23·7 per cent, which is about the usual average given. The loss by oblique action calculated as the squares of the sine of the angles of incidence of the paddles on the water was 13·3 per cent; the sum of the losses by the paddle-wheel being 37 per cent. The "Saranac's" paddle-wheel thus gave as favourable results as are found in sea-going steamers, and the equal effect obtained from the screw of the "San Jacinto," show it to have very perfect proportions.

[To these remarks I have only to add, that although for a war vessel with auxiliary power the performance of the "San Jacinto" may be considered satisfactory, it falls very far short of the performance attained in the case of merchant vessels. This appears mainly to result from the deficient sharpness of the ship; yet there can be no good reason why war vessels, more than any other, should be purposely made of such a shape as to pass with difficulty through the water. If the speed be taken at 11 miles, or 9½ knots, then $\frac{9{\cdot}5^3 \times 438{\cdot}5 \text{ (mid-section)}}{700 \text{ (indicator power)}} = 537$; whereas the co-efficient of performance of the "Frankfort," computed in the same manner, is 792·3, and of the "Rattler" 676·7. The inferior result in the case of the "San Jacinto" arises not from the smallness of the screw, but from the deficient sharpness of the vessel; for in the "San Jacinto" there is a foot of area in the screw's disc for every 2·6 feet in the immersed section of the vessel, whereas in the "Frankfort" there is a foot of area in the screw's disc for every 2·7 feet of the immersed section of the vessel, which is as nearly as possible the same proportion. The "San Jacinto" appears to be a very similar vessel to the "Dauntless," but her performance is somewhat better than that of the "Dauntless" relatively with the power exerted, if the power required for propulsion be held to vary as the cube of the speed. But as it varies in a somewhat higher ratio, and as the "Dauntless" has the faster speed, the efficiency of the two vessels may be reckoned about the same. The "Dauntless," however, has nearly one-fourth more area of immersed midship section than the "San Jacinto," and only about the same diameter of screw, so that relatively, the "San Jacinto" has the largest screw. The question of the number of blades of the screw is more a question of speed of engine than of anything else. In war vessels, as, indeed, in all vessels, the screw should be sunk as much as possible in the water, and when that is done, a screw of two blades will probably be found the best.

Mr. Isherwood's mode of computing the friction of the screw and engines will give an approximate result which it will be useful to ascertain. But the mode I have suggested of measuring the friction by the diminution in the thrust which the friction occasions, will give the amount of loss from friction that is actually sustained. For if we take the total pressure in the cylinders and compute what thrust that pressure would occasion upon the screw shaft if there were no friction at all, we shall ascertain, when we know the actual thrust, the diminution of effect produced by the total friction of the engines and screw, from whence the amount of power consumed in friction is easily ascertained.]

FEATHERING SCREWS.

I HAVE received the following letter from Mr. Hays relative to my remarks upon his propeller at page 45. As the subject is one of public interest, and as Mr. Hays appears to wish me to take some notice of his letter, I here introduce it with some annotations.

SIR,

IN the first place allow me to correct a small error you have committed in spelling my name, in the description of my two patents noticed in your "Treatise on the Screw Propeller," in which I heartily wish you every success, as a means of calling attention to and thereby more rapidly extending the use of an instrument, fated at no distant day to effect such a revolution in maritime affairs as could scarcely have been anticipated on its first introduction, or perhaps, more properly speaking, its revival by Smith in the "Archimedes." My name is spelt Hays, without the e, whereas you have spelt it Hayes, with the e; and in the second place, which is the reason I should wish my name to be correctly spelt, I wish to enter into some explanations regarding the objects and what I consider the value of my patents, which I think will induce you to correct the opinions you have given in the Third Part of your series in which they are introduced.

Previous, however, to entering into those explanations, allow me to remark, that I do not pretend to the slightest engineering attainments beyond what common sense and some practical knowledge of steam connected with maritime affairs has given me. My first attention was called to the use of the Screw Propeller in the year 1843, on my opinion being asked as to the possibility of using it for common mercantile marine traffic at a very much cheaper rate than the paddle wheel; I considered it could be so used, and that the relative power to tonnage required was very much less than was supposed. I drew my conclusions from the experience of boat sailing, in which I had frequently found that when very dead hauled to the wind, with even a little sea, the boat would make no head-way at all, but merely sag to leeward; but with the assistance of a scull over the stern, or out to windward, though only plied by a boy, the boat would shoot ahead, according to the strength of the wind, 3, 4, or 5 knots, and in a straight course. Undoubtedly it was not the boy-power alone which produced such a result, although it was the consequence of that power, but the combination of the lateral pressure of the wind on the sails, and the forward impetus given by the oar.*

By the substitution, therefore, of an engine of small power with the screw on a vessel, for the boy with the oar on a boat, I concluded the result would be the same; with which view I built a schooner of 200 tons and fitted her with an engine of 20 horse power, in which I found, after several experimental trips, my theory was perfectly correct. But of course, as a given power could only produce a given effect when left to its own exertions, and that 5 knots would be the outside speed we could expect from the vessel I was building with the 20 horse power in a calm, and as a much higher speed of ship was required when connected with the sails, and consequently a proportionate increased rate in the speed of the propeller, which must be attained either by an increase in the speed of the piston, to the destruction of the engine and great consumption of fuel, or by some other expedient—I hit on that of differential gearing, or variable pitch; hence my first patent in July, 1844.‡

To show you the practical effect, I will give you the particulars of an experimental trip, on which Mr. Murray, the second engineer at Woolwich dockyard, attended by order of the Admiralty. We left London at 4 A.M., and carried a perfect calm to Long Reach, steaming 5 knots with the first, or No. 1. gearing; propeller and engine respectively 60 strokes and revolutions; a breeze then sprang up, when we made sail, and the gradually increasing speed of ship reached 6 knots. The engines running above speed, we put on No. 2. gearing for 90 revolutions of propeller; engines immediately reduced to 54 strokes, propeller about 80 revolutions; speed of ship 7¼ knots.

The breeze still increasing, and the speed of ship becoming 8 knots, so that the engines were again running above their speed, we put on No. 3. gearing for 120 revolutions of propeller. The engines thereupon reduced to from 50 to 55 revolutions, propeller about 100 to 102 revolutions; but there speed of ship immediately increased to nearly 10 knots, and before reaching Margate Roads, where Mr. Murray landed, the speed of ship had reached, together with wind and steam, nearly 12 knots.* Then we disconnected the propeller, and found the speed of ship about 9 knots; thus gaining from ⅓rd to ¼th by the assistance of so small a power at such a high speed, without any any additional wear and tear of engines or increased consumption of fuel, by means of the differential gearing.

A report of these proceedings was sent to the Admiralty, coupled with the remark that such an arrangement might be very well adapted for small vessels, but would be too cumbersome for large ones; and just about that time direct acting engines began to be used. However, the differential pitch would produce about the same effect.

After some further experiments as to the working of the screw, and more particularly as an auxiliary to a sailing ship, I came to the conclusion that it could never become a perfect instrument for that purpose, unless it could as easily be taken from use as the maintop sail, or any other part of the ship's furniture. Unshipping and lifting up were practised; but there are too many objections to such plans to be compatible with the general use of the screw propeller as an auxiliary to merchant ships—an application which would constitute a very large proportion of its value.

In the first place, the continual lifting up and replacing the screw when used as an auxiliary only, would soon destroy the finest fittings that could be made, particularly where two parts were to be brought together under water and out of sight, and would be too harassing to a merchant ship's crew. The aperture necessary for bringing up the screw at its working angle would destroy the most valuable part of the ship's accommodations, and the space being left in the dead wood when the screw was unshipped would prevent the ship holding so good a wind, and would form an eddy of water which would interfere with the steerage; added to which the weight of water running up into the aperture would considerably retard the progress of the ship. The cubic contents of the aperture in H. M. screw ship "Vulcan," I believe exceeds 20 tons.†

These objections brought the consideration of whether the screw might not be dispensed with when required, without encountering such difficulties; hence my second patent of December, 1845, for feathering the screw, or bringing the blades so into a line with the keel as that it should not offer any impediment to the progress of the ship when sailing, and might be put in and out of its working position with the greatest facility. The same principle was afterwards, in August, 1846, patented by John Buchanan, but with a pretended improvement of its being self-acting, or of the blade coming into a line with the keel by the pressure of the water, caused by the motion of the ship. The same thing was also patented by Joseph Maudslay, in March, 1848, under a supposition that by giving a greater surface to one side of the blade than to the other, the force of the water, caused by the motion of the ship, would of itself bring the blade into a line with the keel, and that by reversing the propeller it would be again brought into its working position, and thus become self-acting.

This propeller was in November, 1850, fitted to the General Screw Steam Shipping Company's ship "Bosphorus," the first of the Cape of Good Hope line of Royal Mail Packets. The

* This view is a perfectly just one, and has been little regarded or rather little discerned.

† The idea of differential gearing is ingenious, but is founded on a misconception. The speed of an engine may be greatly varied without producing any prejudicial effect upon the performance, and if that be so, gearing is of course superfluous.

* Nothing is better known than that an engine with any given pressure urging the piston will exert an amount of power which will be strictly proportionate to the number of its revolutions. It will happen, indeed, if an engine be driven fast, which was never intended to be driven at a high speed, the steam will fail to get into the cylinder or out of it with sufficient rapidity to enable the full pressure of the steam to be exerted upon the piston. But this is only saying that the ports have not been made sufficiently large, and in an engine intended to drive the screw without the intervention of gearing, the passages should all be made larger than usual; the bearings also should be of extra length, to obviate the disposition to get hot at the high speed.

† There are other modes of meeting these objections than that which Mr. Hays has adopted, so that the alternative does not wholly lie between these plans and his.

patentee, however, felt so much doubt about the self-acting principle, that he fitted a clip attached to the end of a spindle, to be worked from the deck, for turning the blades backwards and forwards. I witnessed several attempts in the East India Docks, superintended by Mr. Joseph Maudslay himself, to effect the self-acting principle, but which turned out total failures; so that recourse was obliged to be had to the clip, which answered the purpose exceedingly well, and effected the object most satisfactorily. I came to the Cape in that ship, and during the voyage we made every attempt to effect the self-acting principle, but with the same result as in the East India Docks; and I have not the slightest doubt but that Buchanan's plan would equally fail.*

Previous to the trials in the "Bosphorus," I had received counsel's opinion that Maudslay's was an infringement of my patent: but he relied on his self-acting principle as being a sufficient improvement to justify his patent. However, on the failure of that, it was suggested by our mutual friends that an arrangement should be entered into, which was carried into effect, — he working the patent in his name.

As the Cape mails were the first Government packet ships that had screw propellers, the Admiralty appointed commanders in the Navy, instead of the ordinary Lieut. Admiralty agents in charge of the mails, that they might report on the working of the screw *generally*, but *particularly* on the feathering principle. It was therefore subjected to the most severe tests, and as a proof of its value, not only were the three small vessels with which the line was commenced, fitted with it, but subsequently a new ship of the company, of 1000 tons, in which it has answered the purpose most successfully; and it is being put into their other new ships of 1750 tons, and 300 horse power.

To show you how much you are in error in fancying there is little advantage to be gained by bringing the blades of the propeller in a line with the keel, or that the same, or nearly the same speed, can be attained by disconnecting the propeller and allowing it to revolve freely, I give you the result of one or two of the many experiments made on the passage out in the "Bosphorus," and which have now been continued in that ship and all the others, since the commencement of the line, with precisely the same results; and it is acknowledged by all, that the feathering principle is a most valuable improvement to the screw propeller, and, as I will show you, indispensable to its general use as an auxiliary to sailing ships.

"December 22d, 1850, at 1 P.M., ship making 9½ knots, engines 60 strokes, put screw fore and aft, speed of ship 9¼ knots; kept the clutch out of gear ¼ of an hour, but notwithstanding the speed of the vessel was so great, the force of the water on the screw did not in the least alter the angle."

"December 23rd, 1850, running under canvas with screw feathered, speed of ship 8 to 9 knots; at 1 P.M. shifted the angle of the screw into its working position, and tried speed of ship — 6¼ knots; disconnected propeller and allowed it to revolve, speed of ship 7 knots; put screw fore and aft, speed of ship 8 knots."

"January 13th, 1850, light winds: at 2 P.M. stopped engines, and tried screw in working position, speed of ship 3¼ knots; do. disconnected and revolving, 3½ knots; do. fixed fore and aft, 4 knots."

As to the feathering, or some other principle by which the propeller may be easily dispensed with, and at the same time the sailing and steering qualities of the ship be as little interfered with as possible, and the principle of either increasing the speed of the propeller without overworking the engine or increasing the consumption of fuel†, suppose a merchant ship (trading, say for example, to India, or performing any other long voyage,) of 1200 tons, and fitted with engines of 100, or even as little as 80 horse power, which in calm weather and smooth water would propel her 6, or perhaps only 5 knots per hour, which is what I call strictly auxiliary, the advantages to be gained by merely being assisted in calms or light airs would not compensate for the outlay, expense of working, and space left for stowage; and unless the propeller could be easily got rid of when required, the detention it would cause to the ship, when not in use (suppose it to be ever so trifling, even ¼ a knot per hour), would not be compensated by so partial a use of it. But supposing the propeller can be so easily got rid of without at all affecting the sailing properties of the ship, as has been now so fully proved by the feathering principle so successfully adopted by the Cape of Good Hope Mail Packets, the matter assumes an entirely different aspect, for then the propeller may be used not only for assisting the ship in calms and light winds, but for helping her up to windward in contrary winds and in bad weather without any loss of speed when the steam is not required*; and I feel quite confident that with such power to tonnage, a vessel would make voyages to and from India, or any other part, with the greatest regularity, and that it would quite do away with detentions in the Channel, or anywhere else, from contrary winds and bad weather; and if the differential speed or varying pitch of the propeller were added, the instrument would be very much more perfect, and smaller powers could be used: for though I am quite willing to admit that to a certain extent, the propeller when in motion does, with the assistance of the sails, increase the speed of the ship beyond what it would be driven if unassisted by them, it is a great fallacy to suppose there is no limit to it. The fact is, the limit is the speed of the propeller, all the slip being got rid of by the help of the sails; and the faster you can drive the propeller, or increase its progress by increasing the pitch, which amounts to the same thing, the faster your ship will go; but if the speed of the propeller is to be increased by additional speed to the piston, your engines will soon be knocked to pieces, and the consumption of your fuel will be proportionably increased.†

Another advantage of the feathering principle is, that when feathered it can be brought up through such a trunk as will occupy but little athwartship space, and consequently interfere but little with the accommodations, and in case of injury the blades may be separately taken out and replaced by others.

You are at liberty to make what use you please of this letter; but after the opinions you have publicly expressed as to the merits of my improvements, I think I am entitled to call upon you to take some public notice of these explanations.

I am, Sir,
Your most obedient servant,
C. D. HAYS.

Resident Agent,
G. S. S. Shipping Company,
Cape of Good Hope, February, 1852.

* Buchanan's plan has a much larger amount of turning power than Maudslay's, and it is quite certain that the amount of swivelling or weathercock action could be made sufficient to turn the blades. All feathering screws, however, have countervailing objections, and in such vessels as the mail vessels plying to the Cape, I consider such devices to be wholly out of place.

† There is no need of apprehension on either of these grounds. If an engine can be made to drive a swift vessel when in direct connection with the screw, without being knocked to pieces, there is no need of apprehension in the case of the lower speeds of sailing ships. If it is wanted to keep the consumption of fuel uniform, it is only necessary to work with more expansion when the velocity of the engine increases.

* Acting as a lee-board, I presume. Its action in this respect would be quite insignificant, and could easily be compensated by giving a little more depth of keel, or a little more extension to the run.

† In much of the foregoing I concur, but other parts of it are manifestly fallacious. It is certainly true that, in the case of ship's employing a screw merely as an auxiliary in calms, it would be a fatal objection if such arrangements were indispensable as would occasion a retardation at other times, and no one would think of employing the screw if its use were to be attended with such a penalty. This, however, it is clear is only a hypothetical case, for I am not aware that there are any screw vessels in existence which use the screw only in calms, and the class of auxiliary screw vessels of which alone we have experience, but rarely throw the screw out of operation, and would in no case do so except when impelled by a strong and fair wind. Now, seeing that the screw is almost in constant operation, and that it is only in exceptional cases that the screw, even if made feathering, would be disused, and the arms be brought into the line of the keel, the question arises whether it is worth while, in order to gain a slight advantage in these rare cases, to introduce a species of mechanism for feathering the arms, the more especially as screws formed on the feathering plan are necessarily weaker and more liable to derangement. It seems hardly judicious, in my judgment, to accept a permanent and ever-present evil — which a greater susceptibility of derangement in the screw must be admitted to be — for the sake of realizing an occasional advantage, even were that advantage larger in amount than by Mr. Hays' showing it is found to be.

When the progress of a screw vessel is aided by sails, the effect, so far as regards the propeller, is much the same as if the resistance of the hull had been diminished. The number of revolutions of the screw will consequently be increased, but the thrust of the screw-shaft will remain the same as before, supposing the engine to be still adequately supplied with steam. If the pitch be increased, however, the thrust of the screw-shaft will be diminished, whatever the supply of steam may be; but the number of revolutions will be diminished also, so that the amount of thrust will continue to be proportional to the expenditure of steam. It will signify little, in fact, whether the pitch is coarse or fine, as regards the effect ultimately produced. With a coarse pitch there will be fewer revolutions and a less thrust; with a fine pitch there will be more revolutions and a greater thrust. Or if only the same thrust be desired which obtains in the case of the coarse pitch, then that result will be obtained by diminishing the pressure of the steam.

ON THE INTRODUCTION AND PROGRESSIVE INCREASE OF SCREW-PROPULSION IN HER MAJESTY'S NAVY.

[THE following paper has been issued by the Steam Department at Somerset House to accompany the Tables of the Dimensions and Performance of the Screw Vessels of the Navy, given under a modified arrangement at pages i. ii. and iii. of the Appendix. As an official statement of facts it is useful, and I therefore introduce it with some annotations.]

ALTHOUGH various propositions were made from time to time for many years to use the screw as an instrument of propulsion, and a great variety of experiments tried in boats and small vessels, yet neither the reasoning of the projectors nor the results of their experiments appear to have carried conviction to the minds of most men that this kind of propeller could be usefully employed, or at all events that it could successfully compete with the paddle-wheel. The immediate cause of its introduction into the Navy was the successful performance round Great Britain and elsewhere of the "Archimedes," a vessel of 237 tons, built in the year 1838 by the Screw Propeller Company, with a view of ascertaining the value of the invention. She was first tried against a paddle-wheel vessel in 1840, the results of the trials are contained in the following Report, the first official one made to the Board on the subject of Screw Propulsion.

Dover, May 2nd, 1840.

SIR,

IN pursuance of the instructions of the Lords Commissioners of the Admiralty, as conveyed to us in your letter dated 25th ultimo, directing us to examine and report upon the principle on which the "Archimedes," steam vessel is propelled, we beg to state that we have made such experiments as were practicable, and we request that you will be pleased to submit to their Lordships the following report. On our arrival at this place we made arrangements with Commander Boteler, by which the "Widgeon" mail steam packet was placed at our disposal. The following statement shows the comparative size, power, and immersion of the two vessels.

Names.	Tonnage.	Diameter of Cylinders.	Length of Stroke.	Mean Draught of Water.
Widgeon - -	162	39 inches	3 feet 1 inch	7 feet 3 in.
Archimedes -	237	37 inches	3 feet	9 „ 4 „

The "Widgeon" is the fastest packet upon the Dover station. She has 10 horses power more, and 75 tons burthen less, than the "Archimedes;" and the mean draught of water of the former is 2 feet 1 inch less than that of the latter.

EXPERIMENTS.

1.— Our first trial was upon a run of 19 miles upon a W. S. W. course from Dover Roads, with a light breeze aft and smooth water, but without sails. The engine of the "Archimedes" worked 27 strokes a minute, and the speed of the vessel was 8½ knots per hour. The "Widgeon" performed the whole distance in 6 minutes less than the "Archimedes." 2.— In returning the above 19 miles to Dover Roads, against a moderate head wind, without sails, the engine of the "Archimedes" worked 26 strokes per minute, and her speed was from 7½ to 8 knots per hour. The "Widgeon" performed the distance in 10 minutes less than the "Archimedes." 3.— The third experiment was a run of 19 miles, from Dover Roads to Calais Roads, in a perfect calm, with the sea smooth as glass. "Archimedes'" engine worked 27 strokes per minute, and her speed was from 8½ to 9 knots per hour. The "Widgeon" performed the distance in 3½ minutes less than the "Archimedes," and the whole time occupied by the latter on this trial was 2 hours 9½ minutes. 4.— In returning the above 19 miles back to Dover Roads the weather was dead calm and the sea smooth as before. The French mail packet, called "La Poste," started at the same moment. Speed of the "Archimedes" and her engine as before. "Widgeon" ran the distance in 4 minutes less than "Archimedes," and the "Archimedes" in 25 minutes less than "La Poste." The latter has engines of only 50 horses aggregate power. 5.—On this trial there was a fresh breeze at east, and moderate sea. Both vessels set the whole of their sails, the "Archimedes" carrying much more canvas than the "Widgeon." The run was as before, from Dover to Calais, 19 miles close hauled. "Archimedes'" engine from 27 to 28, and her speed from 9 to 9½ knots. "Archimedes" ran the distance in 9 minutes less than the "Widgeon." 6.— In returning to Dover with a fresh breeze abeam and all sails set, "Archimedes'" engine 28, and speed 10 knots; she performed the distance in 5½ minutes less than the "Widgeon."

REMARKS.

These trials clearly prove that the speed of the "Archimedes" is slightly inferior to that of the "Widgeon" in light airs and calms, and in smooth water; but as the steam power of the former is 10 horses less, and her burthen 75 tons more than the "Widgeon," it is evident that in these vessels the propelling power of the screw is equal, if not superior, to that of the ordinary paddle-wheel. In this respect, therefore, Mr. Smith's invention may be considered completely successful. It is also plain, from the second trial, that in the steaming against even a light air of wind, the low mast and snug rig of the "Widgeon" gave her an advantage over the "Archimedes," with loftier masts and heavier rig; and although the prevalence of calms prevented our trying them farther upon this point in blowing weather, we are satisfied that in strong breezes the advantage of the "Widgeon's" low rig in going head to wind would be still more apparent. On the last two trials, however, the power of the sails operated strongly in favour of the "Archimedes," as she then beat the "Widgeon," and made the passages between Dover and Calais in less time than it has ever been performed by any of Her Majesty's mail packets. The "Archimedes" went upon this occasion from Dover to Calais in 2 hours 1 minute, and returned in 1 hour 53½ minutes.

There are two points of great practical importance respecting the Screw Propeller which ought not to pass unnoticed. First, the noise made by the spur-wheels used in giving the necessary velocity to the propeller shaft. Secondly, the liability of those wheels to rapid wear, and to accidental derangement. The noise alone, we conceive, would prevent its being applied to any of Her Majesty's packets in particular. Mr. Smith, however, proposes to obviate this objection by substituting spiral gearing in lieu of the present cogs; and a model of this method will be submitted to their Lordships with this report. As it is the intention of Mr. Smith shortly to make trial of this alteration, we abstain from giving any opinion upon its merits at present.

It is, however, in propelling vessels of war that the value of Mr. Smith's invention will probably be experienced. In such cases, the rumbling noise in the ship made by the spur-wheels is of no great moment, even if it cannot be overcome; for outside the vessel, this noise is not audible to so great a distance as that made by the common paddle-wheel. A ship fitted with the Screw Propeller may be used either as a sailing or a steaming vessel, or as both, if required; for we ascertained by experiment that the engine can be connected or disconnected with ease, and in any weather, in two or three minutes. In carrying a press of sail, the inclination of the ship does not diminish the propelling power of the screw, nor lessen the ship's way, as with the ordinary paddle-wheel. The getting rid of paddle-boxes also leaves the broadside battery altogether clear of obstruction, and in boarding an enemy's vessel would allow of the ships lying close alongside of each other. In conclusion, it is proper to state, that the operation of the screw facilitates the steering, and accomplishes the backing of the ship as easily as the common paddle-wheel.

We have the honour to be, Sir,
Your most obedient Servants,
E. CHAPPEL, *Captain*. T. LLOYD.

The Secretary of the Admiralty.

It is obvious that in the "Widgeon" and "Archimedes," which differed materially both in size and form, an exact comparison could not be made between the performance of the screw and that of the paddle; but the result of the trials clearly showed, especially when the peculiar fitness of the screw for war purposes was taken into consideration, the propriety of trying this new instrument in a less equivocal manner. With this view the "Rattler" was ordered to be built; and, that the experiment might be conclusive, so far as a trial between two vessels could make it so, she was constructed on the same lines as the "Alecto,"— the after part being lengthened for the insertion of the screw, — and fitted with engines of the same power and on a plan which had been previously tried in paddle-wheel vessels.

The river trials of the "Rattler" lasted from October, 1843, to the beginning of 1845, and from them it was clearly seen that the screw might be advantageously reduced from two half turns to about one-third of this length, an alteration which greatly reduced the weight, facilitated the operation of shipping and unshipping, and appeared to render unnecessary the wounding to so great an extent the after part of the vessel. Before this last point was decided, it not being evident that the good performance of the shorter screw was not attributable to the greater clearance which the reduction of its length had caused, the screw aperture was partly filled up in a temporary manner, so as to leave the shorter screw the same clearance as the longer one originally had.* The result of this experiment showed that the screw aperture in future vessels might be constructed of very moderate dimensions without lessening the effect of the propeller. It was also evident from these trials that the screw, as an instrument of propulsion in smooth water, was not inferior to the paddle-wheel.

In the early part of the year 1845, the "Rattler" proceeded, in company with the "Victoria and Albert," and the "Black Eagle," from Portsmouth to Pembroke. When rounding the Land's End, and steaming against a strong head wind, both these vessels, as might be expected, showed a great superiority, their power being much greater than the "Rattler's" in proportion to their resistance, and their paddle-floats being constructed on the vibrating principle. This comparative failure of the "Rattler" made an unfavourable impression on the public mind as to the efficiency of the screw against wind and sea in heavy weather, and this impression in some degree still remains, although no conclusive proof of its inferiority in this respect has yet been afforded; for in the subsequent trials of the "Rattler" with the "Alecto" at sea, against strong head winds, the only occasion on which the screw has been fairly tried under such circumstances against the paddle-wheel, no decided advantage on either side seems to have obtained †, the advocates of the screw and those of the paddle respectively claim-

* The experiment was also tried whether there would be any difference in the result whether the screw was placed at the foremost part of the aperture or the aftermost part, but no appreciable difference was observed. I consider, however, that a difference would have been perceptible if the vessel had been set to tow another vessel, or to encounter head winds, and that in such a case the most forward position of the screw would have given the best result. In France the effect has been tried of projecting the screw out astern of the vessel, and a benefit was said to be experienced from that arrangement; but the experiment was tried at Woolwich and no benefit was found to ensue. Much, I believe, will depend upon the form of the vessel's run. In full vessels it would be an advantage, I believe, to place the screw behind the rudder; whereas in properly formed screw vessels it will be preferable, I consider, to place the screw far forward in the dead wood, and as deep in the water as it can be got.

† No decided advantage as regards speed, but a decided advantage by the paddle vessel relatively with the power expended.

ing the superiority, while in fine weather the screw is admitted to have had some advantage over the paddle.*

The "Rattler" was next tried against the "Vesuvius" in a run from the Thames to Leith, and showed in respect of speed a decided superiority over the paddle-wheel vessel, whose power, as compared with her tonnage, was greater than that of her competitor.† Before joining the squadron under the command of Rear Admiral Hyde Parker, in July, 1845, the "Rattler" was employed to tow the "Erebus" and "Terror" to the Orkney Islands, and she appears to have performed this service to the satisfaction of Sir John Franklin. Before this time, however, the "Bee" was constructed with both screw and paddle-wheel for the instruction of the Officers of the Royal Naval College, the "Dwarf" purchased, the conditional speed of 12 miles per hour having been realized, and the "Fairy" built for the use of Her Majesty; but although the results of the experiments made upon the two latter vessels threw some light upon the action of the screw, and satisfactorily showed that by its means a comparatively high rate of speed could be obtained, yet they could scarcely be regarded as proper data on which to proceed in the construction and fitting of larger vessels. Some private companies also were led to entertain so favourable an opinion of the screw that they ventured to try it; two of them on a large scale. The "Great Britain," of 3000 tons, arrived in the Thames in January, 1845‡, and the "Great Northern," of 1515 tons, two years previously. Neither of these vessels was successfully worked for any length of time, the former having been wrecked and the other broken up, but the results obtained, as regards the application of the screw, were considered satisfactory.

These results, probably, together with those obtained from the preliminary trials of the "Rattler," and above all, the favourable reports by naval officers of her performance at sea, induced the board, in 1845, when the steam navy was about to be considerably increased, to determine that the screw should be adopted. They determined at the same time that the engines should be so constructed that every part of the machinery would be below the water line§, an important deviation from the practice which had previously existed, and one which must be regarded as a great step towards rendering steam vessels fit for all the purposes of war. The board likewise ordered the screw and its fitting to be so arranged, that the operation of shipping and unshipping might easily be performed in any weather ¶, thus rendering the vessels, as far as practicable, perfect sailing ships whenever steam power was not required.

It thus became necessary, in order to fulfil the various requirements indicated, to devise new forms of engines and new modes of application, there being at that time no kind of engine which would effectually answer the purpose. All the eminent marine engineers in the country were therefore called on to propose that construction and arrangement of engine which they might severally think the best adapted, the dimensions of the propeller, and the number of revolutions it would be required to make, being furnished for their guidance, and the necessity of keeping the whole of the machinery below the water line being insisted on. Beyond these necessary conditions the manufacturers were left unfettered, and they, as might be expected, seeing a new and wide field open for their exertions, submitted a great variety of designs, the result of their great experience and mechanical ability. These designs differed widely from one another; some were with and some without gearing, and many of them appeared to possess great merit. Of these selections were made, giving to nearly all the most eminent engineers an opportunity of carrying into effect one at least of the plans which they severally proposed, and in no instance giving orders for more than two engines of the same description, a decision which seems to have been judicious, when it is borne in mind that little experience had then been acquired in this novel application of steam power.

In the year 1845 tenders were accepted for fifteen pairs of screw engines for vessels of various dimensions, and, on the suggestion of the Harbour Defence Commission, eight pairs for what were originally termed block ships, four of them being line-of-battle ships and four frigates. The good performance of the former class seems to have altered their original destination from mere floating batteries to sea-going ships ¶, calculated to serve with advantage in conjunction with a fleet. Of the frigate block ships, one only out of the four has been ordered to be fitted, and with smaller engines than those originally intended for her. She is not yet completed.

In order still further to test the comparative value of the screw, one paddle-wheel vessel, the "Basilisk," was ordered to be built on the same lines as the "Niger," and to be fitted with engines of the same power. The result of the trials recently made between these two vessels may be shortly stated. In fine weather, when equal engine-power was exerted, there was little difference of speed, and when sail could be used the advantage was in favour of the screw.** There was no opportunity of trying the vessel's head to wind in heavy weather, an important point which hitherto remains undecided by actual experiment.†† The expenditure of coal was much greater in the "Niger" than in the "Basilisk," but this disadvantage arose from the construction of the boilers and engines, and not from the difference between the propelling instruments. As far as trials have been made of the various kinds of screw engines, success to a greater or less degree may be said to have been the result of all; certainly none of them can be regarded as failures; but the pecuniary loss sustained by most of the manufacturers, and the great anxiety felt by all, can be fully appreciated by themselves alone. Sufficient experience has not even yet been acquired for the basis of a sound opinion as to the particular form of engine which should be adopted, but the selection may now be confined within comparatively narrow limits, and experience already points out the strong probability that gearing may be altogether dispensed with, thus entirely obviating the noise so much objected to in the first screw vessel, increasing the simplicity of the machinery and reducing its bulk and weight.*

One important fact, which during the early trials of the screw most persons doubted, has been incontestably proved, and has already led and is calculated to lead still further to a very extensive application of the screw as an auxiliary. It has been established beyond all question that it is unnecessary to adopt complex contrivances for altering the angle of the screw, or to use, as was done in some private vessels, differential gearing, to enable the engines to work advantageously under the varying velocity of the vessel, occasioned by using the sails to a greater or less extent in conjunction with steam power. If, for example, an engine and screw be arranged to drive a vessel at the rate of five knots, the number of strokes given out by the engine will not be inconveniently increased, or the effect of the screw diminished, when by the addition of sail power, the rate of the vessel is increased to 10 knots, the simple screw thus becoming a convenient and efficient auxiliary in all classes of ships, and producing, whenever used in conjunction with sail power, a higher rate of speed than could be obtained under the same circumstances by sail alone.† This view is confirmed by the successful performance of many private vessels fitted with auxiliary power. The small vessels first built traded to ports at no great distance, but their voyages have already been extended to Constantinople; and it now seems highly probable, judging by what has been accomplished, that fine sailing vessels, fitted with auxiliary screw power, will be found able, if not to rival, at least to approach, full-powered and expensive steam ships, in respect of their capability of making a long voyage with certainty, and in a reasonably short time.‡

Another application of the screw, although inferior in importance to its application as a propeller to ordinary ships, is certainly deserving more attention that has hitherto been paid to it, namely, as a manœuvrer to those large ships in which engines of considerable power cannot be placed, or in which it is considered unadvisable to place them. No doubt can be entertained of the efficiency of such an instrument worked by an engine of even 50 horses power. The full extent, however, of its utility cannot, perhaps, be thoroughly appreciated until it shall have been extensively tried in Her Majesty's Navy.

The proper form of the run of screw vessels being at the time of their introduction, and for some time afterwards, a matter rather of speculation than a deduction from known principles or facts, a wide difference of opinion on this important point obtained among those who were engaged in designing these vessels; and the board, in order to ascertain within certain limits the form which ought to be adopted, directed some experiments to be made on the "Dwarf."§ These experiments were carried out by attaching in a temporary manner to the iron plate some pieces of wood, so as to render her after-body as full as that of any of the vessels then in progress. The great reduction of speed from 9 knots to less than 4 knots, caused by this alteration, unequivocally showed the impropriety of adopting such a form; and all the vessels then in course of construction, except those not sufficiently advanced to render necessary any alteration, were to a greater or less extent improved in the form of their stern immediately before the screw aperture.‖

The great importance, or rather the necessity, of introducing forms calculated to aid the action of the screw, cannot be questioned in those cases in which a high speed is regarded as indispensable, it being evident that in such cases a proper form is also indispensable, for without it the object of high speed is not attainable; but even when a moderate speed only is required, a suitable form, although not, as in the former case, absolutely necessary for obtaining the required speed, will be seen to be of greater importance than is perhaps commonly supposed, by a consideration of the great waste of power and its attendant evils occasioned by the adoption of the contrary form. If, for example, a ship, which, if of the proper form, would be propelled at 7½ knots, is propelled at 6 knots only, about one-half of the engine power is thrown away, thus wasting half the original cost of the engines and boilers, incurring double the current expense of wear and tear, consuming double the quantity of fuel, and losing the

---

* It has an advantage in the case of deep immersions, except when the wheels are made on the feathering principle, and then the paddle manifests a superior efficacy under all circumstances. Feathering wheels, however, are very complicated and expensive. The wear and tear incident to their use is very great, and they are liable to derangement in rough seas, especially in the case of vessels performing long voyages, where they cannot be frequently inspected and any necessary adjustment made.

† This is no test unless the vessels were of similar shape and size, or unless an adequate allowance be made for any difference in these respects.

‡ The "Princeton" had before this time been constructed in America, and the "Pomone" in France, both with their engines beneath the water line.

§ An arrangement suggested by Ericsson, and already carried into effect in America and France. In 1844 the board had given Count Rosen, Ericsson's representative in this country, orders to fit the "Amphion" with engines kept beneath the water line, on the plan already adopted in the "Princeton" and "Pomone."

¶ An arrangement patented by Taylor in 1838, and described at page 25 of the present work.

¶ Floating batteries need not be diminished in efficacy by giving to them a shape capable of passing through the water, and this remark will equally apply whether the propelling power is steam or sails.

** The screw vessel had rather the advantage under sails alone, but not with sails and steam combined. In deep immersions, however, the screw had an advantage over the paddle, but in light and medium immersions, the paddle had an advantage over the screw.

†† The experiments with the "Rattler" and "Alecto," made before this time, showed that against a strong head wind the speed of the two vessels would be about the same, but that the screw vessel would consume by much the most coals. This result has been confirmed by all the experience which has since been obtained.

* In this view I completely concur, and gearing may indeed be already ranked as among the antiquities of engineering. It only adds another to the many existing instances of human perversity, to find engineers still clinging, as some of them still do, to so superfluous and cumbersome an expedient as gearing must now be regarded. But the gravitation of fact is inevitable and cannot be resisted, and if there be engineers who will not give gearing up, the public will assuredly give up them. It is a monstrous thing that engines should be made four or five times larger and heavier than is necessary; and for what purpose? to diminish wear and tear? that can equally be diminished by giving to all the bearings an amount of surface which is proportional to the increased speed; and it would be just as reasonable to drive common engines at half their speed, in order that the bearing surfaces might be twice as narrow, as to refrain from increasing the speed of screw engines on that account.

† I have made some remarks upon this subject in commenting upon Mr. Hays' letter, given in the Appendix.

‡ The difficulty is the increased consumption of fuel in encountering head winds, as vessels carrying important mails require to do. It is possible, no doubt, to make a head wind aid the progress of a vessel more than it resists her progress, but this idea has not yet been carried into practical effect.

§ These experiments were made on the suggestion of Mr. Lloyd, who doubted the propriety of making the sterns of the vessels so full as was at that time intended. Mr. Smith considered that a full stern would enable the screw to act in a more efficient manner, and this view would perhaps be correct if the speed of the vessel were not diminished. But the large diminution in the speed, consequent upon the fulness of the stern, reduces the column of water which the screw has to act upon, and impairs the efficacy of the screw as much as the efficacy of the ship, while the recession of the water caused by the screw increases the difficulty the water experiences in closing in at the stern. Nothing is more important to the success of screw vessels than to make the stern very sharp and fine; and in vessels which are not fine at the stern, it will be better, I believe, to place the screw some little distance astern of the ship than in the usual place.

‖ Not only was the speed greatly reduced in the "Dwarf" by increasing the fulness of the stern, but when so altered she would not steer.

advantage of dispensing with half the weight of engines, boilers, and coals, and reducing by one-half the space which they occupy in the ship; or if the weight and space were not calculated to produce serious inconvenience, throwing away the capability of carrying fuel for perhaps three times the number of days. Probably such considerations as these induced the board to order the after-bodies of so many screw vessels to be improved, with a view of insuring advantages which were neither doubtful nor of small moment, and which appeared to outweigh the expense of making the necessary alterations. Subsequent experience clearly proved the soundness of the views thus carried out.*

The screw engines ordered from 1841 to 1844 amount to 8; in 1845 to 26, including "Erebus" and "Terror;" in 1847 to 9; and in 1848 to 2, for pinnaces of "Investigator" and "Research;" making the total number 45.

The numbers in the last column of the Table (given at page iii. of the Appendix), and in the column next but one preceding it, show approximately the relative excellence, in respect of speed, of the forms of the various ships, conjointly with the relative efficiency of the propeller, as adapted to each of them.

The formulæ by which the calculations are made are founded on the assumption that the resistance of a ship varies as the square of her velocity, and therefore that the power required to produce that velocity varies as the cube*, and that the useful effect of the engine, that is, the effect which remains after deducting the power absorbed in overcoming friction, working air-pumps, &c., bears a constant ratio to the power developed in the cylinder, known by the term "Indicated Horse Power." The resistance is, in the first of these columns, assumed to vary *cæteris paribus*, as the area of the midship section, and in the last column as the cube root of the square of the displacement.† None of these assumptions, however, more especially the last two, are absolutely correct, but probably they are not so far from the truth as to render useless and uninteresting a comparison, of which they are the basis, made between the performances of any two screw ships, while between two vessels which do not materially differ in engines and displacement, or in the area of their midship sections, such a comparison is not only highly interesting, but it may prove of great value in pointing out the forms of ships and proportion of propellers which ought to be adopted. In some striking cases it is scarcely necessary to make any other comparison than that of speed. For example, the "Teazer," after her form had been improved, went above a knot an hour faster with 40-horse engines than she had previously gone with engines of 100-horse power. Again, these engines of 100 horse, when transferred to the "Rifleman," a vessel approaching to double the tonnage, drove her, after her form had been altered, as fast as she was previously driven by engines of double the power, and nearly 2 knots faster than the same engines drove the smaller vessel before the alteration of her after-body.

Somerset House, May, 1850.

* It is to be regretted that all the ships of the Navy, whether propelled by sails or steam, are not made of a form answering to the views here expressed. The capabilities of a vessel to carry guns, or any other deck load, are not diminished by giving her a form suitable for speed; and a reduced expense and an increased efficiency would be the result of an amended form. If fast vessels are good for the merchant service, they are good for the Navy also; and if antiquated ideas could be only dismissed and antiquated prejudices conquered, a very superior class of vessels would speedily be made available for the public service. One of these prejudices is, that none but a naval man can understand or realize the conditions which are necessary to enable a vessel to carry guns, and be suitable as a war vessel in other respects; whereas if the conditions, whatever they may be, were only specified, and the ingenuity of the country directed to their realization, it would soon be found how superior would be the result to any which has been heretofore obtained.

* The velocity, however, varies in a somewhat higher ratio than as the square, as has been explained in the body of the present work; and I have also explained in the body of the work, that the theoretical thrust of the screw shaft, diminished by the actual thrust as shown by the dynamometer, gives the amount of friction of the engines and screw.

† Any such comparison, to afford correct relative results, should take cognizance not merely of the form of the vessel and the proportion of sectional area to the engine power, but also of the size of vessel, as small vessels are propelled with more difficulty than larger, even when the vessels are similar in all other respects.

WOODEN AND IRON STEAMERS.

THE relative advantages of wood and iron as a material for the construction of ships and steam vessels, has now become a question of much practical importance. Strong opinions are held in favour of each material, but extreme opinions carry a presumption against them in the estimation of impartial inquirers, and the truth appears to be, that iron ships are neither so good nor so bad as has been represented. Our experience of iron ships is still too limited to enable us to say how much better or worse they are than wooden ships, under all the varying circumstances which arise in practice; but we have acquired sufficient experience of them to know that iron vessels are, in some cases, better than wooden vessels, and in other cases worse, and any opinion in reference to this subject is certainly wanting in discrimination, which implies either unconditional praise or unconditional condemnation. Instead, therefore, of arraying ourselves as partizans of any particular species of vessel, it will be more useful to inquire what the circumstances are, in which iron can or cannot be employed with advantage as a material for the construction of ships, and here the evidence of facts is the only proof of eligibility which can be accepted. The prevailing propensity, in all such investigations, is to generalize upon too narrow a basis of observation; for it is a more laborious thing to ascertain or verify facts, than to coin a theory or adopt a dogma, and we must be careful, therefore, that we accept every fact just for what it is worth, and for nothing more, if we wish to avoid a course involving the necessity of subsequent retractation.

The main objection to timber, as a material for building ships, is its liability to decay, and cases have several times occurred in which vessels have been destroyed by the dry rot while still upon the stocks. The "Ocean," "St. Domingo," "Ajax," and various other vessels were completely worn out in four years, and four or five years appears to be the utmost longevity of frigates built of American pine; but cases, nevertheless, have occurred, in which timber vessels have lasted 100 years, so that rapidity of decay is not the necessary concomitant of the adoption of timber. The "Royal William," a wooden vessel built in 1719, lasted more than 100 years; the "Sovereign of the Seas," built in 1639, lasted forty-seven years; and various cases of merchant vessels lasting from forty to fifty years, might be recounted: but the *average* duration of a ship is estimated by the Commissioners of Woods and Forests, in their Report of 1812, on Timber for the Navy, at fourteen years, and there is every reason to believe that even this estimate is too high. Indeed, the dry rot is so treacherous and destructive an enemy, that it is difficult to secure immunity against its attacks, or to predict the rate of its devastations; and notwithstanding the progress of science, dry rot certainly appears to have latterly become more prevalent than it was in former times. This is no doubt mainly consequent upon the use of an inferior quality of timber; for it is well known that some kinds of oak will decay much more rapidly than other kinds, and the largest and best-looking timber is very often the worst. The Dermast oak is the best species of oak that grows in this country. A belt of this kind of oak runs through the New Forest, and it may be readily distinguished from the common oak by the difference of its leaf. The Sussex oak was formerly in much repute, but this species of oak is now hardly to be got, and a great deal of Welsh oak is now used for shipbuilding, although this species of oak is of a very perishable description. The live oak of America is almost imperishable; but this kind of timber is scarce, and does not find its way to this country. The oak of Brittany, which is used for the construction of the vessels of the French navy, is of excellent quality, but the oak of the Rhenish provinces, which is most used by the Dutch, is of a very perishable nature, and is usually salted to increase its durability. The various methods of preventing dry rot in timber, from which so much benefit was at one time expected, have not been found to be of much practical importance. Kyan's process for preventing decay by coagulating the albumen of the sap by means of corrosive sublimate, is not only expensive, but it is found that the preservative material corrodes the iron bolts driven into the timber, and this method of preventing dry rot has consequently fallen into disuse. The processes of Payne, Bethell, Margery, and Burnett, all profess to preserve timber from decay and from the ravages of insects; and to test the value of these pretensions, I took with me to India pieces of timber of various kinds, prepared by these several patentees, and caused them to be exposed in situations favourable to the attacks of the white ants and to decay. In a dry situation no change was visible during the lapse of some months, but in a damp situation the whole of the specimens began to decay, and they were all attacked by the white ants, and would have been speedily eaten up entirely if they had not been removed. The pieces of wood prepared by Bethell's process of impregnating them with creosote, were less decayed than the rest, but wood so prepared is very inflamma-

ble, and several railway viaducts, built of timber prepared in this manner, have been burnt down from accidental ignition caused by the sparks of a passing train.

In some of these processes the timber is boiled or steeped in the preservation liquid, and in others the liquid is forced into the pores of the wood by hydrostatic pressure. A more effectual method of impregnation, however, consists in introducing the liquid into the live tree, by pouring it into a trough of clay round the trunk — two augur holes near the outer edges of the trunk, with a wide saw-cut between them, having been previously made, to enable the liquid to be sucked up by the vital action of the tree itself. In the dockyards the timber is boiled in fresh water to coagulate the sap; but this is a very ineffectual method of preservation, and heavy repairs are often required by vessels which are never out of port. Indeed, it has long been known that vessels laid up in ordinary often require heavier repairs than vessels which had been at sea, and it is found that the yachts which lie for the greatest part of their time upon the mud at Cowes, get the dry rot, whereas those that go often to sea are free from it. Vessels lying in ordinary have always some stagnant bilge-water in them; for the pumps of all vessels fail to drain them completely dry, and this stagnant water promotes dry rot to a serious extent. It would consequently be found a great preservation to vessels laid up in ordinary, if they were each to be provided with a sea-cock, which would let water in occasionally from the sea or river, and also with a small windmill for working the pumps, whereby the water so admitted would be discharged overboard after having performed its work of purification. The windmill being quite small and portable, would be removable from ship to ship, and dry rot might thus often be arrested or prevented at a very trifling trouble and expense.* Some builders, by a careful selection of their timber, by its judicious distribution in the vessel, and by proper arrangements for cleanliness and ventilation, have been so successful in preventing dry rot, that they hardly know what it is; yet, looking to the common class of ships, it is certainly a serious, and appears indeed to be an increasing evil. As the country becomes denuded of its forests, oak of a quality suitable for shipbuilding ceases to be readily obtainable, and inferior kinds of timber are consequently employed, by which the durability of our vessels is diminished. But while there is this increasing penury of wood, iron is a material which we possess in greater abundance than other nations; and while it is the tendency of events to make oak and all kinds of timber of home growth dearer and dearer, it is equally their tendency to make iron cheaper and cheaper. Every improvement in the manufacture of iron diminishes the cost of its production, and it will be a manifest national advantage if these improvements can be made subservient to the promotion of our maritime interests. Those interests will certainly be promoted by any agency which diminishes the cost and improves the quality of ships; and if the use of iron can be rendered instrumental in any measure in producing both or either of these effects, and at the same time enables us to enjoy the benefit in a larger measure than other nations, we are certainly warranted in deriving much satisfaction from the anticipation. Nor is there any reason why we should be discouraged or scared by a few unsuccessful experiments, or be deterred from pursuing that career of mechanical endeavour, upon which we have deliberately entered, and towards which we are impelled by the exigencies of our present condition. If good and cheap wood be becoming every day more scarce, and good and cheap iron more abundant, the relinquishment of the one material to a considerable extent, and the adoption of the other, is a physical necessity, even although the cheaper material is found to be the worse; and with the pressure of such a necessity upon us, it is quite impossible that iron vessels should be discarded or put aside on light or hasty grounds. There are, however, various substantial objections attaching to iron vessels which, though perhaps not insuperable, do certainly exist at the present time, and it will be proper to consider these objections, together with the remedial measures suggested by those who are most conversant with such subjects, or which have been found to be most effectual in practice.

FOULING.

The accumulation of sea-weeds and barnacles upon the bottoms of iron vessels, though occurring to no inconvenient extent in these latitudes, is found to be a weighty objection in the case of vessels plying from this country to the Black Sea or Mediterranean, or employed in a tropical climate. This fouling of the bottom is more rapid if the vessel lies in salt water at the termination of every trip, than if she has to enter a river, or other tract of fresh water; for the marine plants and animals will not live in fresh water, and generally fall off the bottom if the vessel continues in fresh water for any considerable time. As a general rule, iron steamers plying upon the coasts of this country will require to be docked every twelve months if kept constantly in salt water, and the bottom will then be found to be partially covered with small shells and long grass, which may be swept off with a stiff broom. If one or both of the termini of a voyage be in fresh water, docking will not be so often required. In the case of vessels plying to the Black Sea or Mediterranean, docking is advisable every six months, and in the case of vessels running in the Indian seas, docking is advisable every four months, if the vessel does not lie at the end of the voyage in fresh water. A. Cursetjee, chief engineer and inspector of machinery to the East India Company at Bombay, reports that when the "Indus" steamer was taken into dock at that port, he took barnacles off the bottom twelve inches thick and eighteen inches long; and he also mentions that the "Nemesis" was a mass of barnacles upon the bottom. Captain Gribble, the Peninsular and Oriental Company's Superintendent at Bombay for some years, writes as follows, in answer to my inquiries: — "Between Bombay and China no ship should be longer than four months without examination. The fouling process commences immediately after undocking. At first the bottom is covered with a slimy deposit of a vegetable nature, upon which the incrustation rapidly takes place. This deposit is readily scraped off by divers. To maintain the regularity of a mail service, four months is the outside limit that an iron ship should run without cleaning and painting on the Bombay and China line. The 'Pottinger' iron steamer, which left England in February, 1847, to perform a voyage to India round the Cape, was docked in Bombay in September. The bottom was very foul; the barnacles were six inches long, in large clusters. In the run a second layer had begun to form. The 'Pekin,' which left England in February, 1847, was docked at Bombay in October. I can compare her to nothing else than a half tide rock. The barnacles were nine inches long, the second strata being complete, with a feathering coral formation sprouting from cluster to cluster. The stench from the decomposed animal matter was so great, that no one could remain on board at night, and the paint was tarnished. The 'Pekin,' although a fast ship, had her speed reduced by the fouling to six and a half knots per hour. I have reason to believe that lying in fresh water for some time destroys the marine animals which adhere to iron ships, and the friction of the water passing the vessel, if in a river, or of the vessel passing through the water, if at sea, causes the adhesions to fall off after their subjection to fresh water for a sufficient time. I cannot state the exact time requisite to produce this effect, but having sent the 'Pekin,' the 'Malta,' and the 'Pottinger,' to Whampoa, to try the effect of fresh water upon them, it was found that their stay of three days was insufficient to accomplish the desired object." Such is Captain Gribble's experience, and it may be added that the experience acquired on the Calcutta and Suez line, shows that about eight days' subjection to fresh water will cause the marine animals

* This is a suggestion made to me by Mr. White of Cowes.

to die and fall off. It is not necessary, therefore, to dock those ships so frequently as the ships upon the Bombay and China line, for every time they come into the Hooghly they are in a great measure cleared of adhesions by the natural operation of the fresh water.

It is now a well ascertained fact that rapidity of fouling is not a mere question of latitude, and that in different places in the same latitude, and of the same average temperature, fouling will occur much more speedily in some than in others. In reference to this subject, Captain Gribble says, "Galle Harbour and Hong Kong are the worst places for encouraging fouling I know of. I cannot account for the badness of the former except that, as an indentation of the coast line, it may form a receptacle for marine animals swept towards Ceylon by the prevailing westerly current. On comparing the engineers' logs of the Company's ships, there is found to be very little variation of density, except at the head of the China Seas, where it is greater than any other part of the voyage from Bombay to China."

Believing that some antidote to fouling might be found in the practice of the boatmen of the several localities where fouling most rapidly takes place, I have directed my inquiries to the investigation of that subject, but I do not find that any expedient is employed by the natives of the East, by which the progress of fouling can be materially arrested. Captain Gribble says, in reference to this topic, "Chunam and cocoa nut oil is applied to all the boats and craft on the western coast of India, the Persian Gulf, the Straits, and Seas to the eastward, and on the coast of China. It is an excellent preservative, and requires renewal once or twice a year, according to the trade in which the vessel is engaged." But it is against the perforation of the uncoppered bottoms of the boats by worms, rather than against marine adhesions, that this expedient of preservation appears to be directed; and there is no reason to believe that such a composition, which is in truth only a kind of putty, would be found of any efficacy in preventing the fouling of iron vessels. Captain Moresby, of the Indian Navy, who has had much experience in the navigation of the Indian Seas, recommended some years ago the trial of a native composition for preventing incrustation, of which aloes was the principal ingredient. Captain Moresby, in a letter written at this time, says, "A general opinion appears to exist in favour of some external covering for iron ships, and I know of none better suited to the purpose than a medicated application long in use among the Persians and Arabs, to protect the bottoms of their dhows and other vessels from the adhesion and consequent depredations of marine animals, and which appears to owe its protective power to the character of its principal ingredient *aloes*, which either from its bitterness or from being a positive poison to such animals, completely prevents their adhesion, and as this, in the case of iron ships, is a desideratum, a trial of it might be made; for I see no reason why the application should not be as beneficial in the one case as in the other. The formula for its preparation is as follows: one ounce of aloes mixed with turpentine, tallow, and white lead, is sufficient for covering two feet, and it requires about twelve pounds for a vessel of fifty tons burden. As a simple modification of this recipe, I should recommend that to the common red lead paint, usually applied to the bottoms of iron vessels, a quantity of aloes should be added as would make the composition correspond as nearly as possible with that used by the Arabs. One hundred weight of aloes would be about sufficient for a vessel of 500 tons burden." In conformity with this recommendation, a composition of red lead and aloes was applied to the steamer "Ripon," plying between Southampton and Alexandria, but it was found to be wholly ineffective in preventing fouling from taking place.

At a very early period in the history of iron ships, it was found that a poison such as arsenic mixed with the paint would for some time prevent marine incrustations, but after all the arsenic in the exterior layer of the paint had been dissolved out, so that an insoluble film, which had been divested of its poison, was presented to the water, fouling was found to go on as rapidly as if a poisonous paint had not been applied. It was consequently perceived by Mr. Mallett, of Dublin, that in order to enable any poisonous paint to remain effective for any considerable time, the paint itself must be of about the same solubility as the poison mixed with it, and a number of practical experiments were made by Mr. Mallet, which completely established the soundness of this ingenious hypothesis. An iron ship may consequently be preserved both from fouling and from corrosion by the following course of procedure.

First of all the hull, after having been made perfectly clean and dry, must be coated with a protective varnish, of which asphaltum is the basis, and Mr. Mallet recommends that this composition should be laid out with a spatula, or long strip of horn, rather than with a brush, as a brush leaves minute air bubbles. Before the varnish is applied, it is advisable to heat the surface of the iron in successive portions, by means of open coke fires, or by any other convenient means, and for the best quality of preservative varnish, Mr. Mallert gives the following receipt: —

Take *fifty* pounds of foreign asphaltum, melt and boil it in an iron vessel for three or four hours, adding gradually, in fine powder, sixteen pounds of red lead and litharge, ground together, in equal proportions, with ten imperial gallons of drying linseed oil; bring all to a boiling temperature. Melt in a separate vessel eight pounds of gum anime (which need not be of the clearest or best quality), add to it two imperial gallons of drying linseed oil boiling, and twelve pounds of caoutchouc, softened or partially dissolved by coal-tar naphtha, as practised by the makers of waterproof cloths. Mix all together in the former vessel, and boil gently, until, on taking some of the varnish between two spatulas, it is found tough and ropy. When quite cold it may be thinned down with from thirty to thirty-five gallons of turpentine, or of coal-tar naptha, and it is ready for use. When this varnish cannot be conveniently got, coal-tar applied hot may be employed, and will answer nearly as well.

After the application of a good coating of this preservative varnish to the vessel, the soluble poisonous paint is next to be applied, which Mr. Mallet recommends, should be prepared by taking a strong bodied thick paint, composed of red lead, sulphate of barytes and drying linseed oil, and adding to every 100 pounds of this paint, about twenty pounds of oxychloride of copper, and three pounds of a mixture composed of a yellow soap melted with an equal weight of resin, and a little water. The whole of the immersed hull of the vessel is to be coated with this paint over the varnish, and it must then be permitted to dry and harden for three or four days before the ship is floated out of dock. Realgar, or sulphuret of arsenic, Mr. Mallet states, may be used instead of the oxychloride of copper, and it appears to be a preferable material in some respects, as any preparation of copper will exert a galvanic influence in corroding the iron, should the preservative varnish happen to be in any part rubbed off. It does not appear that Mr. Mallet's composition has had any extensive trial, apparently from the negligence of the inventor in pressing it upon public attention; but, whatever may be its absolute merits, in comparison with other compositions, there is very little doubt that the principle of a partially soluble and poisonous paint is the only sound one yet discovered as the means of preventing marine adhesions; and it appears to have been by Mr. Mallett that this principle was first propounded.

No sooner were the voyages of iron steamers extended to latitudes where the fouling of the bottom takes place so rapidly as to give rise to serious inconvenience, than the public ingenuity was stimulated to the device of measures calculated to remedy the evil. Most of the resulting projects, as usually happens in such cases, were failures; but to test the relative merits of the various compositions which had been suggested, the Peninsular and Oriental Steam Company directed one of its steamers, the "Ripon," to be painted over in spots with the whole of the different compositions, which had been suggested as a remedy, with the view of affording a fair comparison of their respective qualities. The following are the names of the parties who applied their compositions to the bottom of the "Ripon," on the 27th of January, 1848: —Lees, Moresby, Clarke, Ince and North, Hayes, Chanter or Weddersted, Grantham, and Parker. After running the usual time, the vessel was taken into dock and examined, when the following appearances were presented: —

Lees' composition: as foul as red lead, hard when scraped, but there was corrosion in spots.

Moresby's composition (aloes and red lead): could not be distinguished in any, way either in colour or cleanliness, from red lead.

Clarke's composition: foul, rusty appearance outside, and corrosion penetrating into the plate.

Ince and North's composition: barnacles and grass as on red

lead, but no corrosion; hard, and when scraped, the composition appeared perfect.

Hayes' composition: much corroded and foul.

Clarke's composition (No. 2): very foul and corroded.

Chanter or Weddersted: foul and much corroded.

Chanter or Weddersted (No. 2): appearance clean, and without corrosion, excepting upon after part of plate; but when struck with a hammer it scaled off, showing that corrosion had taken place beneath the paint.

Grantham's composition (one part tallow, two resin, one sulphur): foul and very much corroded.

Parker's composition: more corrosion, barnacles, and grass than upon red lead.

The result of this trial was consequently to show that none of the compostions which had been tried would preserve an iron vessel from fouling and corrosion. A very different result, however, has been subsequently obtained by the application of a kind of paint compounded by Mr. Peacock, of the Southampton docks, which is found to be exceedingly effective in preventing both fouling and corrosion; and it is the property of this paint, moreover, to preserve a slippery surface on the iron like the back of a fish, whereby the velocity of the vessel through the water is said to be somewhat increased. Captain Engledue, the Peninsular and Oriental Company's Superintendent, at Southampton, bears very favourable testimony to the efficacy of this paint. He says, "the first ship regularly coated with the composition was the 'Ripon,' on the 3rd of June, 1849, when she was done on the starboard side with one coat over a coat of the Patent Alkali Company's purple brown paint. The original red lead not being scraped off. The opposite or port side was done with the usual two coats of red lead only. She came out of dock on the 8th of June, and left for Alexandria on the 20th, returning to Southampton about the end of July, at which time Mr. Peacock's side was quite clean, whilst the opposite side was covered with long thick grass, which was scraped off four feet down from the water-line and recoated with red lead, the ship being heeled for the occasion. She left for Alexandria again on the 20th of August, and before leaving that port it was found necessary again to heel her and to scrape the port side as before. On her arrival at Southampton she was docked on the 4th of October, when the port side was again found to be covered all over with long thick grass and bunches of barnacles, whilst the starboard side was quite free from grass, although there were a few small barnacles here and there upon it. This side had not been touched since the composition was laid on in June. The plates on both sides were found to be perfectly free from oxidation." Similar testimony as to its efficacy in the West Indies, and in many other situations where, without such a protection, fouling would rapidly take place, is given by competent observers; and there appears no reason to doubt that ships may be preserved from fouling for four or six months, even in the worst waters, by being coated with this composition.

CORROSION.

ANOTHER of the most obvious objections to iron vessels is, their liability to corrosion, and several cases might be mentioned in which iron vessels have been very speedily worn out from this cause. Corrosion takes place both externally and internally, but external corrosion never occurs to an inconvenient extent, unless the vessel has been left undocked and is covered with barnacles; and internal corrosion will seldom occur unless the bilge water be suffered to accumulate in the ship, and the operation of painting is neglected. In the "Grappler" steamer, when she returned from the coast of Africa, the plates of the bottom upon both sides, but especially the starboard side, were found to be so bad that the vessel was pronounced incapable of further service; but this result would certainly not have ensued, had the vessel received that ordinary degree of attention which is known to be indispensable to the preservation of iron ships in tropical climates. It will not do, with our present limited means of preventing fouling, to send an iron steamer to any foreign station in a hot climate, where she must remain for years in sea-water without any opportunity of cleansing and repainting the bottom being afforded. Such a procedure is to ensure the destruction of the vessel; for it is well known that many of the adhering shell-fish, and especially oysters, rapidly corrode away the iron, and the bottom of the vessel will in time be eaten through, if their depredations be not arrested. The bottom of the "Grappler," when she returned to this country, was found to be one mass of barnacles and oysters; and in all cases in which vessels require to continue very long at sea, or to be in salt water ports in tropical climates for a considerable time, without an opportunity being available for docking or otherwise cleansing away the marine adhesions on the bottom, iron is, in the present state of our knowledge, an improper material for the construction of such vessels, inasmuch as serious injury to the iron, and an impaired efficiency of the vessel, must ensue under circumstances so unpropitious. It is equally obvious that the adoption of iron as a material for the construction of merchant vessels intended to perform voyages to tropical countries, where no opportunity for docking can be obtained, is a measure of doubtful propriety in the present state of the question. By Mr. Peacock's composition, it appears certain that vessels may be preserved from fouling, and from external corrosion, for a period of four to six months, and where the length of the voyage does not exceed that time, or where the voyage is performed to a foreign port which affords means of cleansing the bottom, no inconvenience from fouling or external corrosion need be apprehended; but where these conditions cannot be fulfilled, it appears certain that, in the present state of our knowledge, iron is not the proper material to employ. The fouling of the bottom, indeed, and its attendant, corrosion, is the great impediment to the more extensive employment of iron for commercial purposes; and although the objection has already been overcome to a considerable extent, and will, in all probability, be overcome altogether, yet its existence, even in the present abated form, indicates the propriety of using only wooden vessels, properly coppered, in all cases where facility of cleansing and repainting the bottom at intervals cannot be afforded. All iron vessels should endeavour to make a river or other tract of fresh water one terminus of their voyage, in order that an opportunity may be given to the fresh water to kill and detach the marine incrustations, and by this arrangement the necessity for such frequent docking may be prevented. Iron war steamers, also, employed on foreign stations, should occasionally go into rivers with the view of cleansing the bottom, unless there is a dock into which they can be taken. The water issuing from sewers has a very corrosive action upon iron, and in some rivers a galvanic action has been detected, consequent upon the stratum of fresh water lying on the stratum of salt water, forming, with the iron, a voltaic circle, whereby corrosion was promoted; but in most cases no appreciable injury has arisen from this cause. The action of bilge water, and the attrition caused by ashes and bits of coal in the bilge when the vessel rolls, has, in some cases, worn off the heads of some of the rivets internally. In vessels carrying cattle in the holds, internal corrosion is occasioned by the condensed vapour from the cattle's breath; and beneath the hatchways there is corrosion caused by the rain, which sometimes falls when the cargo is being taken out; upon the whole, however, internal corrosion need not occasion any serious inconvenience, as it can be readily prevented by keeping the vessel clean, dry, and well-coated with red lead paint on the inside, and, as a general rule, no material inconvenience from internal corrosion is experienced in practice. There are some kinds of cargo, however, which are very destructive to iron ships, and one of these is guano. Where iron vessels are used for the conveyance of such commodities, the internal corrosion will necessarily be very great.

HEAT IN WARM CLIMATES.

In consequence of their more perfect conducting power, there appears every reason to expect that iron vessels should be hotter in warm climates and colder in cold climates than wooden vessels; but the difference in this respect, though ascertained to exist, is not found to be productive of practical inconvenience, and is indeed almost inappreciable. Capt. Gribble, in reference to this subject, says, "the difference between iron and wood, as regards temperature, is immaterial. If the heat of the iron vessels were much greater than that of the wooden, the difference would be shown in the diminished health of the crews; but according to my experience, the iron vessels are quite as healthy as the wooden ones. In ships built with a break in the deck, with the heated air from the boilers, chimneys, and after-stoke-hole flowing into the cabin windows in the fore part of the quarter-deck, the heat is sometimes ascribed to the material of which the vessel is built, instead of to the real cause. The difference is very perceptible in the 'Achilles' and the 'Pekin.' The first is the coolest ship below I ever sailed in, while the latter is complained of, from the above cause, as one of the hottest." The truth appears to be, that what mainly determines the temperature of a vessel in warm climates, is the quality of its ventilation; and I must say, from my experience both in going to India and in returning from it, that in this respect the vessels of the Peninsular and Oriental Company are most defective. A vessel crowded with passengers in a country where the thermometer is 95° in the shade, and with all the side-ports shut up, as in boisterous weather requires to be done, needs some more effectual means of ventilation than the inartificial expedient of a windsail, which, under some circumstances, is inoperative, and which, if heavy rains occur, requires to be altogether removed. There appears little reason to doubt that the same cause which renders iron ships hotter than wooden ones also renders them more damp; for at night the radiation of heat from the sides of the vessel, and the perfect conducting power of the metal, condenses the vapour in the air within the ship, which is consequently deposited in dew on the sides of the vessel, in the same manner in which the vapour of a hot room is condensed by the cold panes of glass in the window, until the moisture is so accumulated that it trickles down in drops. The captains of the iron Post Office packets, running between Holyhead and Dublin, say that they cannot keep their clothes from becoming damp; but the same inconvenience is experienced in the deck-houses of wooden vessels to a considerable extent, and it would easily be remediable by applying a lining of felt, stuck on to the iron by white or red lead. In the cabins of all iron vessels the sides of the ship are lined with wood, and in the iron vessels of the Peninsular and Oriental Company, running in the East, it has not been found that any material inconvenience from dampness, caused by the internal condensation of vapour, has been experienced. Capt. Gribble says, nevertheless, that "there is certainly greater condensation in iron, than in wooden ships;" but the difference does not appear to be such as would be appreciable by a cursory observer, as to need any other means than good ventilation as a remedy for the evil. In an iron vessel, however, employed as an opium clipper between India and China, the condensation was so great that the water trickled down and damaged the cargo. But this inconvenience would have been prevented by placing battens in the hold, which would prevent the cargo from coming in contact with the vessel's sides.

DISTURBANCE OF THE COMPASSES.

The local attraction of the compasses of iron vessels was at one time reckoned the most serious impediment to their use as seagoing vessels; but this objection has now been so far surmounted as to occasion but little inconvenience in practice, and iron vessels are at present navigated in all parts of the world with the same ease and certainty as wooden vessels. The local attraction acts with the greatest force when the needle lies athwart the vessel, as it will do when the vessel lies in a direction east and west; for the attraction of the ship has the greatest effect in turning the needle round when it acts with the leverage of the needle, and this, when the needle is at right angles with the attracting object, it will necessarily do. In some vessels the local attraction is counteracted by magnets, according to a method suggested by Professor Airy; but this method of compensation, though very effectual at first, loses its efficacy as the magnets lose their force, so that after a lapse of some years it is so inaccurate as to require the compasses to be readjusted. In other cases, a common compass is employed, of which the errors have been previously ascertained and arranged in a table which shews the actual course answerable to any apparent course indicated by the compass, and by the aid of such a table of errors the vessel may be correctly steered; but this method is liable to cause mistakes, and sometimes the correction is allowed on the wrong side. In other cases, the table of errors is dispensed with, and an unequally graduated card is employed, as suggested by Capt. Sparkes, which, by the inequality of the graduations, represents the amount of the error, and thus redresses the influence of the local attraction. Compasses with unequally graduated cards, constructed by Mr. Stebbing, of Southampton, are employed in many of the Peninsular and Oriental Company's vessels, and they are found to answer as well in India as in Europe. With compasses of this kind, it is obviously necessary to be careful that the binnacles are not allowed to be shifted after they have once been fixed; and it is equally obvious, that it is impossible to take the bearings of lateral objects with such a compass, without some special provision for the purpose. I have requested Mr. Stebbing, of Southampton, who has had a great deal of experience in adjusting the compasses of iron ships, to favour me with the results of his observation on the subject, and he has accordingly forwarded to me a very able and interesting letter, which, however, is too long for me to insert here, but I will give a summary of its principal conclusions, which are as follows:—

Compasses may be supplied to iron ships, which will enable them to be navigated with as much ease and certainty as wooden ships, and the compasses of wooden ships often need correction, in consequence of the large quantity of iron in the hull and rigging. Corrections by magnets have generally had the preference over other modes; but compasses adjusted on this system are not more correct than those with the unequally graduated card. The method of a corrected or unequally graduated card is very suitable for iron vessels, and indispensable, if the binnacle compasses are near one another. Tables of errors, applied in correction of the indications of a common compass, are accurate but inconvenient in their application, and occasion mistakes; but if this system is used, the correction should, in all cases, be applied to the binnacle or steering compass itself, and not to an independent or standard compass, as is often the practice. All iron ships going long voyages should have a table of errors for a compass placed at a particular height and in a particular position, and the height and position, as well as the errors, should be entered in a book kept in a secure place, so that if the binnacles and corrected magnets, or cards, are washed overboard or shot away, a temporary compass with known errors may be put up. In vessels performing ocean voyages it is advisable to have one compass with a corrected card, and the others corrected by magnets. Compasses corrected by magnets are affected in their indications by the lapse of time, and also by a change of geographical position; but the data are as yet insufficient to enable the amount of correction proper for these errors to be precisely predicated. A compass may be correct at some points and incorrect at the others. The errors of one ship are no guide to the errors of another, and the errors of one part of any one ship afford no indication of the

errors incident to the other parts: the errors, however, are generally less towards midships. Every iron steamer is herself a magnet, and some have the north pole aft and some the south pole. The poles of the vessel are not always in the vertical plane passing through the keel, but, in some ships, run from the starboard bow to the port quarter, and in other ships, from the port bow to the starboard quarter. In all iron vessels there are two points, not always opposite, at which there is no error; and there are two other points at which the error is a maximum, and the deviation goes from right to left, and from left to right, but not by an arithmetical progression. Thus, in one range of five points the error may be three degrees, and the next five points the error may be thirty degrees.

Such are the main conclusions and recommendations offered by Mr. Stebbing, and their value is attested by the fact that iron vessels, supplied with compasses adjusted by him on these principles, are now plying in every part of the world, and no practical difficulty of moment in the navigation of these vessels has yet been experienced. In iron vessels, indeed, the compass has now ceased to be a difficulty, and the supercession of what at one time was regarded as a very serious difficulty, affords an encouragement to attempt the removal of other objections, however formidable they may at present appear, and however imperfectly we may yet see our way to the accomplishment of the desired amelioration.

EFFECT OF SHOT.

The last topic to which I feel it necessary to refer in connexion with iron ships, is the effect of shot upon them; and while I feel that this is one of the most important points of their probation, I cannot but be aware that there are many persons who must be much more competent than I can be to deal with such a subject. At one time a confident belief prevailed, partly from the result of experiments tried with iron targets, partly from the experience acquired of the effect of shot upon the "Nemesis" and other iron vessels in China, and partly from other concurring circumstances of a similar character, that iron vessels would withstand shot better than wooden vessels. At the present moment, however, the balance of proof is certainly the other way; and the experiments which were some time since made at Portsmouth show very clearly, in my judgment, that iron vessels, in their present state, are not suitable for purposes of warfare. I pass over the experiments with the "Ruby," and the experience acquired on the Rio de la Plata, and on the Danube, during the war in Hungary. The French government, too, has lately been prosecuting experiments, which have resulted, I understand, in a virtual condemnation of iron steamers for warlike purposes; but I pass over this corroboration of the other proofs, converging to the same point, which have lately been afforded, and will confine my remarks to the late Portsmouth experiments, as reported in the public papers to the following effect: —

"A large butt had been made in the dockyard representing the two sides of an iron vessel, each side of the strength and consistency of one of the large iron steam ships. This butt was erected on the mud at a distance of 460 yards from the 'Excellent,' and the practice took place at high water, from guns of different calibres and various charges of powder. Both shot and shell were fired.

"At intervals between the firing boats visited the butt to examine the effects of particular shot upon the iron work. It was found that on the side on which the shot entered, that a large and tolerably round hole was made in the iron plate, the circumference being much jagged, and the edge turned inwards. On the opposite side where the shot passed out, the hole was larger and also jagged, the edge of the hole being turned outwards with occasionally some rivets started. Some of the shot, from striking against angles of the iron ribs, were broken in pieces, the fragments passing out at the opposite side, making holes of various sizes and formations. Shells also appeared to have a destructive effect upon the iron work in creating splinters, and the pieces of shell passed out through the plates at the opposite side, the offside, in all cases, suffering most. To test the effect of the splinters inside the vessel, a slight plank bulkhead had been run up between the iron sides of the butt. This was found entirely shattered, and shows clearly how dreadfully the crew of an iron vessel would have suffered, more especially when it is considered that the splinters inflict the most dangerous description of wounds."

Sir Charles Napier, writing to the "Times" in reference to this experiment, says, "the splinters from the iron were most destructive, and the holes so large that they could not be plugged up in action. But the most extraordinary thing is, that nearly every shot split into fragments: this will save our enemies the expense of firing shells. A canvas screen was stretched across between the two sections of the butt, which was riddled like a sieve, although some of the pieces of the shot were not bigger than one's nail."

I think no one can read these relations of fact without acquiescing in the conclusion, that iron steam vessels are unsuitable, as at present constructed, for warlike purposes; and if this doctrine be assented to, the inference is inevitable, that the Admiralty would not be justified in permitting more iron vessels to be built for carrying the mails under contract. One main purpose of these mail vessels is, to be available as vessels of war in any emergency, in consideration whereof, and as a recompense for present services, a large annual payment is made towards the maintenance of the vessels. But if the vessels thus assisted are unsuitable for warlike purposes, one main end of their institution no longer exists; and it is quite plain that conditions which are imperfectly fulfilled must not be so liberally rewarded. The question, therefore, of the effect of shot upon iron ships has an important bearing upon the mercantile navy, for it is very desirable that all ships of considerable size should be capable of being employed for warlike purposes in cases of emergency; and iron ships, as at present constructed, cannot with propriety be so employed. Since, however, the more extended use of iron vessels in our merchant service cannot, under the increasing dearth of timber, be prevented, and since, moreover, there is a considerable number of iron war steamers already in existence, and of which some use must be made, it becomes important on these grounds, and apart from other reasons which might be recited, that all available means should be tried to abate or counteract the mischievous effect of shot upon such structures. I confess I cannot see any mode of accomplishing this object, which will be equally appropriate under all circumstances. If, as one might infer from reading Sir Charles Napier's letter, a shot, on striking a plate of iron, broke up into small pieces by the force of the concussion, the case would not be a very difficult one for the application of a suitable remedy, inasmuch as small fragments must have a correspondingly small momentum, and might easily be arrested by a second strong plate put behind the first. It appears, however, to be only when the ball strikes a rib of the vessel, that it breaks into pieces: at other times it goes right through both sides, and even where the ball breaks, its fragments are very often so large as to pass through the offside, in the same manner as if fracture had not taken place.

One of the most promising expedients for obviating the dangers incidental to the splintering of iron vessels that I have heard of, is the application of a layer of a substance called kamptulicon one foot thick to the inside of the vessel. This substance, which is an admixture of powdered cork with Indian rubber, is stuck to the surface of the iron by means of an Indian rubber varnish, and it is so elastic, that when a ball passes through it collapse immediately ensues, and the hole is so effectually closed that it is impossible to introduce the end of a walking-stick, even although a shot as large as a man's head has passed through. It is found, moreover, that the splinters of the iron are imbedded in the kamptulicon and retained there to a considerable extent, so that the two most prominent evils of a jagged hole, impossible to be plugged, and a large scattering of splinters, appears to be in a great measure remediable by the employment of this substance. How it may withstand shell has yet to be ascertained, and the objection is a manifest one, that it is better to adopt timber at once than to em-

ploy iron, and then to be at the expense of covering it with such a substance; but even timber ships splinter to a considerable extent, and it may possibly turn out that iron ships lined with some such substance which will arrest small splinters and close up the holes made by large ones, will be safer and better than ships of wood. These, however, and other similar questions, are matter for future experiment, and it is to be hoped that the experiments instituted by the Admiralty will be pursued until some useful result is arrived at, or until the extent of the difficulty attaching to the question has been conclusively ascertained. Possibly it may be found advisable hereafter to construct iron war steamers without ribs at all; but whatever may be the modifications which are expedient, or the new devices which are required to remedy existing evils, there is every reason to believe that they will not long remain unascertained or unredressed, under a course of experiments specially directed to the mitigation of existing disqualifications.* The more public the results of these trials are made, the more numerous will be the suggestions of remedial measures; and it appears highly probable that out of a multitude of suggestions some useful discovery will be ultimately obtained, which will enable iron vessels to be used with propriety for purposes of warfare. Meanwhile, however, and until such a discovery is made, I think every one must concur in the propriety of the decision, that no more iron vessels, either for the naval or mail service, shall be built. But the question cannot rest here, and nothing short of a most comprehensive series of experiments pursued with the anxious desire to find a remedy for the defects at present attaching to iron vessels, and with the fullest publicity given to the results will satisfy, or ought to satisfy, the demands made by public opinion.

The advantages claimed for iron ships are, greater strength and stiffness, no liability to rot, or to be damaged by rats, white ants, or other vermin, increased stowage, less weight, greater tightness of the bottom and less bilge water, no necessity for caulking or coppering, and fewer repairs (against which, however, has to be set the more frequent necessity of docking and painting), more ready applicability of water-tight bulkheads, less detriment from grounding or striking upon bars or rocks, and, for an equal quality of vessel, less first cost. Iron vessels have heretofore been always made with wooden decks, but it would be much more advisable to make the main decks of iron, so that the vessel would in effect be a great Menai tube closed at the ends. The iron might be covered with wood, with chunam, or with a species of mustic or asphalte, applied in China to the decks of ships. There appears to be no doubt that by a proper distribution of the material, iron vessels may be made a good deal stronger than they have been made heretofore; and the fact, indeed, of the material being iron, enables its beneficial distribution to be more easily accomplished. In all vessels, however, the existing modes of construction are ill adapted to reconcile lightness with strength, and both iron and wooden vessels should be looked upon as a great hollow beam, and be made as strong in the deck as in the bottom. In the case of river and coasting steamers, screw vessels and smacks, which are perpetually entering tidal harbours, and often getting aground, and indeed in the case of domestic navigation of every description, the superiority of iron over wood appears to be fully recognised. In the case of vessels sailing to tropical climates, however, and if facility for cleansing the bottom does not exist, and in the case also of men-of-war, wooden ships, properly coppered, are certainly the most appropriate. Time, however, will no doubt alter this adjustment, for the sphere of iron vessels is gradually enlarging, and, whatever course the interests of other nations may suggest, our interests certainly prescribe iron as the most eligible material of which we can build our ships, supposing that there is no physical impediment to its employment. Here we need fear no competition; and by making the progress of discovery in our iron manufacture available for the promotion of commerce by cheapening the production of ships, we shall give a corresponding impulse to maritime enterprize, from which large benefits must finally ensue.

* The most promising expedients appear to me to be constructing the vessels with a very triangular section, or with sides of considerable flam, and making the sides double, with a thickness of water between them. With such a construction the balls, I consider, would not enter at all.

SPECIFICATION OF THE AUXILIARY SCREW STEAMER "WATER WITCH."

(Constructed by Messrs. Reid & Co., of Port Glasgow. Propelled by Two Condensing Engines of 17 Horse Power each.)

Dimensions.

Keel and forerake (from aft part of stern-post to fore part of main stem)	120 feet
Breadth of beam	21
Depth of hold	13
Ditto, moulded	$13\frac{7}{12}$
Height of poop	$2\frac{6}{12}$

Ironwork.

Keel. — Of bar iron, $6 \times 2\frac{1}{2}$ inches, in about 30 feet lengths, sufficiently scarped.

Stem and Stern-post. — In proportion, kneed in foot for keel, and scarped for ditto.

Frames. — Of angle iron, $3\frac{1}{2} \times 2\frac{1}{2} \times \frac{7}{16} \times \frac{3}{8} \times \frac{5}{16}$; to be 15 inches from centre to centre.

Floors. — 15 inches deep by $\frac{1}{4}$ inch thick, with 3-inch angle iron on top edge, running upon bilge of frames; amidships 4 feet.

Keelsons. — Three, of plates 18 inches deep by $\frac{1}{4}$ inch thick; main keelson, 6 inches above floors, with two rows $6 \times 3 \times \frac{3}{8}$ inch angle iron; wing ones to be $2\frac{1}{2}$ angle iron only.

Plates. — Strake next keel $\frac{5}{8}$ inch, that to 8 feet water line $\frac{7}{16}$, from 8 to 11 feet $\frac{3}{8}$, remainder $\frac{5}{16}$ inch, to be double riveted throughout; plates to be overlapped longitudinally, with flush butts, and rivets.

Stringers. — Main and quarter deck of $3 \times 3 \times \frac{3}{8}$ inch angle iron, and plates $16 \times \frac{5}{16}$ inch; 'twixt decks, fore and aft, where close-beamed, of $4\frac{1}{2} \times 4\frac{1}{2} \times \frac{3}{8}$ inch angle iron; amidships, two bars 3 inch angle iron, and $8 \times \frac{3}{8}$ inch plates.

Bulkheads. — To have four water-tight bulkheads $\frac{3}{8}$ inch thick; one to be in each peak, and two amidships, so as to divide the hold into three distinct compartments; to be stiffened with angle iron, and made perfectly water-tight.

Beams. — Poop-beams of angle iron $5 \times 3 \times \frac{3}{8}$ inch; main-deck, cabin, and steerage floor beams of $6 \times 3 \times \frac{3}{8}$ inch and $2\frac{1}{2} \times 2\frac{1}{2} \times \frac{1}{4}$ inch angle iron, riveted back to back, with $1\frac{1}{2}$ inch half-round iron on each side at lower edge, and down hanging plate knee, to prevent chafing cargo; four 'twixt-deck beams, 8 inches square, of $8 \times \frac{1}{4}$ inch plates, and $2 \times 2 \times \frac{1}{4}$ inch angle iron, spread out at ends so as to embrace two frames, and lower angle iron and plates, turned down 3 feet on frame, to form hanging knee, to be securely riveted to stringer and frames.

Rudder. — Of iron, properly secured, with mahogany wheel, and sufficient steering gear.

Woodwork.

Decks and Wales. — Ways of red pine; waterways 12×6 inches; deck-plank $2\frac{1}{2}$ inches thick by 6 inches broad, to be well secured with screws, and made perfectly water-tight; ceiling of red pine on lower hold, close-jointed, $2\frac{1}{2}$ inches thick; upper hold 6-inch work, and space sparred work to be fastened to wooden frames; or lower hold ceiling of iron, $\frac{1}{8}$th inch thick; cabin and steerage floors of yellow pine, 2 inches thick, perfectly water-tight; iron frames above deck to be covered in neatly; pumps to be copper chambered, with brass buckets and lead pipes; to have one in each hold to work by hand, and a branch to each hold from engine; bilge-pump. Windlass, winch, spars, sails, rigging, all of first quality, and in accordance with tonnage of ship; cabin similar to other ships of her size.

Machinery.

To have two condensing engines of 17 horse power each, with a boiler of sufficient capacity, and screw on the most approved principle, fitted up in complete working order on board the vessel, all of the best material and workmanship.

Finally, to furnish and finish the vessel complete and ready for sea in every respect (with the following exceptions) in a handsome style, and equal to any craft of the sort afloat.

Exceptions. — Cost of licence of screw, beds and bedding, crystal, crockery, napery, and all other steward's furnishings.

INDEX.

Air-pump valves, 215.
"Ajax," engines of, 214.
"Alecto," dimensions of, 114.; tried against the "Rattler," 115.; indicator diagrams of, 126.
Allen, propelling ships by wheels, 3.
"Amphion," engines of, 214.; mode of raising screw in, 223.
Ancient galleys, Hooke's exposition of the mode of rowing the, 6.
"Archimedes" steamer built and fitted with Smith's screw in 1838, 85.; tried against the "Widgeon," 113.; dimensions of, 113.
"Ariel," dimensions of, 113.
"Arrogant," engines of, 208.
Atherton, Mr., his screw with compound expanding pitch as tried in the "Minx," 136.
Atlantic, screw and paddle steamers on, *see* Appendix.
Auxiliary power, screw vessels with, 180.; speed realized by, 189.

Backing of screw vessels difficult, and cause of, 166.
Baldwin, screw propeller by, 73.
"Basilisk," dimensions of, 119.; tried against the "Niger," 119.
Beadon, screw propeller by, 42. 75.
Beale, bird's-wing propeller by, 58.
Beard, screw propeller by, 82.
Bearings of screw engines, 217.; mode of lubricating, 217. 220.
Beattie, screw propeller by, 72.; effect of in the "Frankfort," 167.
Beaufoy, experiments by, respecting resistance and friction of bodies moving in water, 99.
"Beaver," dimensions of the, 113.
Beecher, arrangement of screw propellers by, 82.
Bernouilli, Daniel, proposal in 1752 to propel vessels by wheels with oblique blades operating in the manner of a screw, 8.
Bernouilli, doctrines respecting fluid resistance and impact of fluids, 98.
Berry, screw propeller by, 31.
Bessemer's mode of propelling vessels, 63.
"Biche," engines of, 206.
Bidone, experiments respecting force of impact of fluids, 98.
Biram, screw propeller by, 34.
Blasco de Garay propelled a vessel by steam in 1543, 3.
Blaxland, screw propeller by, 32.
Blyth, screw engines by, 209.
Boomerang propeller, 58.
"Bordeaux," engines of, 205.
Boswell, screw propeller by, 77.
Bouguer, suggestions for screw propulsion in 1746, 77.
Bourdon, screw propeller with increasing pitch by, 17.
Bourgois, M., makes experiments with various screws in the "Pelican," 139.; memoir by, 142.
Bramah, screw propeller by, 10.
"Brisk," engines of, 205.
Brown, screw propeller by, 18. 55.
Brunel, Mr., tried the "Archimedes," and recommended the "Great Britain" to be fitted with a screw, 87.
Buchanan, suggestions for improvement of screw propeller by, 14.
Buchanan, screw propeller by, 50,
Buckwell and Apsey's screw propeller, 67.
Burk, screw propeller by, 80.
Bushnell, screw propeller by, 10.

Campbell's propeller, 62.
Canals, proposed improvements in navigating, 194.; great increase of resistance upon, 196. 243.
Carlsund, screw engines by, 211.
Carpenter, screw propeller by, 30.; duplex rudder and screw propeller by, 76.
Carthaginians, paddle wheels used by the, 3.
Centre of pressure of paddle wheels, 103.; the resistance on the centre of pressure always balances the pressure on the pistons, 103.
Centrifugal action of the screw, 110. 177. 240.
Chappell, Capt. R.N., reports favourably in 1840 of the performance of the "Archimedes," 86.
Chimneys, telescope, 226.
China, screw propeller used in, 1.
Church, screw propeller by, 19.
"City of Glasgow," engines of, 205.
"City of Manchester," engines of, 205.
Compound expanding pitch, or expanding both fore and aft and from centre to circumference, 136.
"Conflict," engines of, 209.
Conveyance, cost of, by paddle vessels, screw vessels, and sailing ships, 182—189. 244.
Copley, screw propeller by, 78.
"Correo," engines of, 206.
Cummerow, screw propeller by, 18.

Dallery, screw propeller by, 13.
"Dauntless" steam frigate, 169.; engines of 205.; mode of raising screw of, 224.
Davies, mode of propelling vessels by, 38.
Delisle, screw propeller by, 15.
Desblanc, claimed priority of Fitch in propelling vessels, 77.
"Desperate" steam frigate, 169.
Details of screw engines, 215.
Dimensions of screw steamers of the Navy, App. i.
Direct-acting screw engines, 207.; by Watt, Maudslay, Penn, Seaward, Rennie, Blyth, Stothert, Thomson, Carlsund, Ericsson, Whitelaw, Holm, and Disc.
Disc engine, 213.
Dollman's revolving oars for propelling, 78.
Don Georges Juan, work on naval architecture by, 99.
Dugdale and Birch's screw propeller, 61.
Dundonald, Earl of, screw propeller by, 35.
Du Quet, plan by, for drawing up vessels against a current by a screw, 8.
"Dwarf," screws tried in the, 134.; fallacy of the experiments made by Mr. Murray on the, 134.; corrected estimate, 175.; proportion of power to tonnage, 169.
Dynamometer, explanation of structure and use of, 114.; dynamometer diagrams of "Rattler," 126.

Efficiency, *see* Utilization.
Emerson, J. B., screw propeller by, 80.
Emerson, W., explains in 1754 the propriety of making screws with an increasing pitch, 9.
"Encounter" steam frigate, 169.; engines of, 208.
Engines, geared and direct-acting, *see* Geared engines and Direct-acting engines.
Ericsson, screw propeller by, 23.; introduction of screw propeller much aided by his exertions, 83.; constructs the "Francis B. Ogden" in 1837, 88.; discredited by the Admiralty, 88.; built the canal boat novelty in 1837, 88.; his plans taken up by Capt. Stockton, an American, 89.; built the "Robert F. Stockton" in 1838, 89.; proceeded to America in 1839, 89.; built the "Princeton" in America, the first vessel with the engines beneath the water line, 86.; comparative achievements of Smith and Ericsson, 90.; appoints Count Rosen his agent, who supplies engines for the "Pomone" and "Amphion," 89.; engines of "Princeton" and "Etoile" by, 212.
"Etoile," engines of, 212.

Euler, doctrines respecting impact and resistance of fluids, 98.
" Euphrates," engines of, 204.
" European," engines of, 206.
Expanding pitch, *see* Increasing pitch.
Expanding pitch, compound, 136.

" Fairy " screw yacht, 169.; engines of, 201.
" Faon," French mail screw steamer. dimensions of, 169.; performance of, 171. 176.; engines of, 201.
" Fire Queen " screw yacht, 169.; engines of, 203.
Fitch, mode of propelling vessels by, 77.
Fitzpatrick, screw propeller by, 81.
Fluid resistance, laws of, 95.; erroneous doctrines respecting, 96.; doctrines of Bernouille and Euler, Morosi and Bidone, 98.; resistance of friction, 99. 104.; law of resistance as ascertained in steam vessels, 101.; does not increase exactly as the square of the velocity, 105. 140.; in the " Pelican," as the 2·26th power, 145. 237.
Form of hull of vessels influences speed, 141.
" Forth," engines of. 209.
Forret, screw propeller by, 43.
Fowles, fish-tailed propeller by, 56.
Fraisinet, screw propeller by, 26.
" Frankfort " screw steamer, dimensions and performance of, 168.; engines of, 210.
Freight, *see* Conveyance.
Friction of water, 99. 104. 105. 106. 239.

Galloway, improvements in the screw by, 37.
Geared screw engines, 201.; by Penn, Watt, Maudslay, Miller, Napier, Rennie, Seaward, Scott and Sinclair, Thompson, Gourlay, Smith and Rodger, and Mazaline.
" Glasgow," engines of, 205.
Gourlay, Mudie & Co., engines of the " Correo " by, 206.
" Great Britain," engines of, 203.
Greenhow, mode of propelling vessels by, 52.
" Greenock," engines of, 204.
Grent, Thomas, obtained a patent in 1632 for propelling vessels,
Griffith's self-adjusting propeller, 66.

Haddan, screw propeller by, 27.
Hale, mode of propelling vessels by, 21.
Hall, Captain Basil, account of the ships of the Coreans which are propelled by sculling, 78.
Hamer, screw propeller by, 35.
Hayes, James, plan for propelling vessels in 1661 by forcing water through the bottom, 3.
Hays, screw propeller by, 41. 44.; *see also* letter in Appendix, xxix.
Heindryckx's flexible propeller, 67.
Henwood, arrangement of rudder and screw propeller by, 51.
Hero of Alexandria, windmills described by, 2.
Hick and Gaitrix's propeller, 60.
" Highflyer," engines of, 204.
Hodgson, screw propeller by, 38.; tried in the " Rattler," 133.; as applied in Holland, 134.
" Hogue," mode of raising screw of, 224.
Holland, windmills used in, 3.
Holm, Mr., engines for " Pomone " by, 213.
Hooke, Robert, his plan of horizontal windmills, 4.; his proposal to work vertical and horizontal windmills in water virtually a proposal of feathering wheels and screw propellers, 5.; his suggestions respecting the sails of ships, 4.; his instruments for measuring the velocity of wind and water on the principle of a screw, 5.; his remarkable inventions, 6.; his explanation of the mode of rowing the ancient galleys, 7.
Hull, form and size of, influence speed, 241.
Hulls, Jonathan, proposal for propelling vessels by, 3.
Hulls of ships, improved modes of constructing, 192. 243.
Hunt, screw propeller by, 29.

Impact of water, force given out by, 98.; loss of propelling efficacy by impact, 102.
Increasing pitch, screw with, described by Emerson in 1754, 9.; patented by Bourdon in France in 1824, 17.; suggested by Tredgold in 1827, 18.; patented by Peltier in America in 1830, 79; patented by Wilson in America in 1830, 79.; patented by Woodcroft in 1832, 20.; compound increasing pitch, 136.; increasing pitch in " Pelican," 159.
Indicator, description of, 130.
Indicator diagrams, explanation of, 130.; indicator diagrams of " Rattler " and " Alecto," 126.
" Intrepid," engines of, 202.
Iron and wooden steamers, 192. 243. App. xxxiii.
Isherwood, Mr., account of " San Jacinto," American screw steamer, *see* App. xxii.

Jackson, screw propeller by, 81.
James, screw propeller by, 13.
Joest, screw propeller by, 33.
Juan, Don Georges, work on Naval Architecture by, 99.

Lee-way in ships determined by the relation of the bow to the side resistance, 101.
Leibnitz corrects the errors of the English school respecting momentum, 96.
Leupold, Theatrum Machinarum by, describes screws for raising water, 7.
Lifting the Screw, *see* Raising the screw.
Lin, Francis, obtained a patent in 1637 for propelling barges, 3.
Lloyd, Mr., tried the " Archimedes " in 1840 and reported favourably, 86.
Lowe, screw propeller by, 24; absurdity of his pretensions in connexion with the introduction of the screw, 92.
Lubrication of engine bearings, 217.
Lyttleton, W., screw propeller by, 11.

Macintosh, flexible propeller by, 52.
Malo's expanding screw propeller, 71.
Maceroni's screw propeller, 78.
Marestier, memoir by, on steam vessels of America, 17.
Marquis of Worcester, plan for propelling vessels in 1661, 3.
Maudslay, duplicate rudders for ships by, 37.; screw propeller by, 47.; feathering propeller by, 57.
Maudslay, engines of " Rattler " by, 202.; engines of " Highflyer " by, 204.; engines of the " Niger " by, 207.; air-pump valves by, 217.
Mazaline, engines of the " Biche " and " Sentinelle " by, 206.
" Megæra " steam frigate, 169.; engines of, 209.
Miller, engines of " Plumper " by, 203.; engines of " Sharkie " by, 204.
Millington, J., screw propeller by, 14.; mode of propelling by forcing air out at stern, 14.
" Minx," experiments with various screws in the, 136.; engines of, 212.
Moll, M., makes experiments with various screws in the " Pelican," 139.; memoir by, 142.
Montgomery, screw propeller by, 49.
Morosi, experiments respecting impact of fluids, 98.
Murray, Mr., makes inaccurate experiments upon the " Dwarf," 134.

Napier, screw propeller by, 33.
Napier, engines of " Fire Queen " by, 203.; engines of " Dauntless " by, 205.
Navy, screw steamers of the, Appendix i. to iv. and xxxi.
Newton, Sir Isaac, fallacies spring from the error or misapprehension of his second law of motion, 96.
Newton's configuration of screw vessels, 71.
" Niger," dimensions of, 119. App. i.; tried against the " Basilisk," 119.; proportion of power to tonnage, 169.; engines of, 207.
Norton, spiral water-mill by, 78.

Oiling of engine bearings, 217. 220.
Ong, screw propeller by, 81.
O'Reilly in 1805 revives Bernouilli's mode of propelling, 77.
Ovinel, screw propeller by, 79.
Oxley, expanding screw propeller by, 44.

Paddle wheels used by Romans and Carthaginians, 3.; steam vessel propelled by, in 1543, 3.; importance of large floats, 102.; centre of pressure in, 103.; resistance at centre of pressure always balances pressure on pistons, 103.; thrust of paddle wheels increased by diminishing the size of the wheel, 103.; comparative efficiency of paddles and screw, 114. 119.
Paddle vessels with full power, 169.
Paddle and screw combined, 228.
Paddle steamers, cost of conveyance by, 182.
Papin, proposal for propelling vessels by, 3.
Parkhurst, screw propeller by, 44.
Paucton, screw propeller by, 11.
" Pelican," screws tried in the, 139.; dimensions of " Pelican," 139.; tables of performance of, Appendix v. to xxiii.
Peltier, screw with increasing or expanding pitch by, 79.
Penn, improved engines for screw propeller by, 45.; engines of " Faon " and " Fairy " by, 201.; engines of " Great Britain " by, 203.; engines of " Arrogant " and " Encounter " by, 208.; air pump-valves by, 216.; proportions of bearings used by, 217.; bush in stern stuffing-box used by, 221.
Performance of screw steamers of the navy, Appendix ii. to iv.
Perkins, propeller by, 17.
Phipps, arrangement for raising and lowering the screw propeller so as to work it at any level, 70.
" Plumper," engines of, 203.
Pim, screw at bow and stern by, 59.

"Pioneer," engines of, 202.
Pitch of the screw, explanation of the term, 107. 132.
Pitch, expanding or increasing, *see* Increasing pitch.
Pitches and fragments of pitch of screws tried in the "Pelican," 140.; influence of pitch and fragment of pitch upon the slip, 140.; law of variation, 150, 151.; ratio of pitch to diameter will vary with the size of screw relatively with the resistance to be overcome, 141.; and with the number of blades, 142. 158.; proper fragment of pitch or length of screw will vary with the resistance, 141.; best ratio of pitch to diameter, and best fraction of pitch, 158.; a fine pitch best for heavy loads, 165.
Pitch, compound expanding, or expanding both from centre to circumference and fore and aft, 136.
Poole, screw propeller by, 79.
Poole, "Boomerang" propeller by, 58.
"Pomone," engines for, supplied by Ericsson's representative, Count Rosen, 89.; description of, 213.
Power necessary to increase the speed of a vessel varies as the cube of the increased speed required, 105. 178.
"Princeton," American war steamer constructed by Ericsson, 89.; engines of, 214.
Propelling vessels, screw used in China for, 1.; paddle wheel used by Carthaginians and Romans, 3.; plans for propelling vessels of Blasco de Garay, Ramsey, Grent, Lin, Marquis of Worcester, Toogood, Hayes, Papin, Savery, Allen, and Hulls, 3.; Fitch, Desblanc, Thilorier and Delacroix, 77.; propelling by the screw, *see* Screw propeller; Millington, by forcing air out at stern, 14.; Hale, by forcing water out at stern, 21.; Davies, by forcing water out at stern, 38.; Bodmer, by centrifugal fans forcing water astern, 41.; Greenhow, by submerged wheels at stern, 52.; Fowles, by fish-tail propeller, 56.; Bessemer, by forcing water out at stern, 62.; Ruthven, by forcing water out at sides in pipes pointing astern, 63.; Lund, by reciprocating blades at stern, 75.; loss in propelling by impact, 102.; advantage of a large propelling surface, 102.
Raising the screw, modes employed by Maudslay, Miller, Napier, and Seaward, 223, 224.
Ramsey, David, in 1618 and 1630 obtained patents for propelling vessels, 3.
"Rattler" built in 1843 and fitted with Smith's screw, 87.; screw at first the same as that of "Archimedes," but afterwards reduced in length, 87.; dimensions of, 114., App. i.; tried with the "Alecto," 115.; dynamometer and indicator diagrams of, 126.; various screws tried in, 133.; power to tonnage in, 169.; engines of, 202.
Relative resistance of screw and hull, 142. 144, 145.; influence of, upon the slip, 151.
Rennie, screw propeller by, 28.
Rennie, engines of "Greenock" by, 204.; engines of "Vulcan," "Forth," "Seahorse," and "Megæra," by, 209.
Resistance of fluids, 95.; *see also* Fluid resistance, 140.
Resistance of bodies moving in water, 237.
Resistance of vessels varies with the size, and in symmetrical or proportional vessels, increases as the square root of any lineal dimension, 144. 175. 178.
Resistance of hull of the "Pelican," 142. 144, 145.; "Faon" and "Fairy," 171. 173.; "Minx," 179.
Resistance, great increase of, on canals, 196.; and on shallow water, 105.
Robison, erroneous views promulgated by, respecting the resistance of fluids, 97.
Romans, windmills used by the, 2.; paddle-wheels used by the, 3.
Rosen, Count, Ericsson's representative, supplies engines for the "Pomone," 89.; and for the "Amphion," 89.
Rosenborg, screw propeller by, 42.
Ruthven's method of propelling vessels, 63.
Salichon, screw propeller by, 20.
Sails of ships, Hooke's suggestions respecting, 4.; line of moving force of, 100.; velocity with which the sails should move to obtain a maximum effect, 101.; sails virtually increase the diameter of screw, 167.; screw increases the efficacy of sails, 180.; proposed improvements in, 191. 243.
Sailing ships, cost of conveyance by, 185. 187.
Sail against the wind, vessels may be constructed to, 181.
"San Jacinto" screw steamer, App. xxii.
Sauvage, screw propeller by, 80.
Savery, proposal to propel vessels by, 3.
Scott and Sinclair, engines of the "Brisk" by, 205.
Screw engines, either geared or direct-acting, 199.; the latter the best, 200.; *see* Geared engines and Direct-acting engines.
Screw propeller, history of, used in China, 1.; screws of Hooke, 5.; Du Quet, 8.; Bouguer, 77.; Bernouilli, 8.; Emerson (with increasing pitch), 9.; Paucton, 9.; Bushnell, 10.; Bramah, 10.; Lyttleton, 11.; Shorter, 11.; Dallery, 13.; Stevens, 13.; O'Reilly, 77.; James, 13.; Trevithick, 14.; Boswell, 77.; Buchanan, 14.; Millington, 14.; Delisle, 15.; Marestier's account of screws in America in 1824, 17.; Bourdon (screw with increasing pitch), 17.; Dollman, 78.; Perkins, 17.; Maceroni, 78.; Brown, 18. 54.; Tredgold 18.; Cummerow, 18.; B. M. Smith, 78.; Church, 19.; Copley, 78.; Ovinel, 79.; Peltier (expanding pitch), 79.; Wilson (expanding pitch), 79.; Salichon, 20.; Woodcroft (expanding pitch), 20.; (feathering blades), 39. 74.; Poole, 79.; Sauvage, 80.; screw water-mill on the Mississippi, 80.; J. B. Emerson, 80.; Burk, 80.; Theal, 80.; J. L. Smith, 80.; Fitzpatrick, 81.; Wilder, 81.; F. P. Smith, 21.; Ericsson, 23.; Lowe, 24.; J. O. Taylor, 25.; Fraisinet, 26.; Capt. Smith, 26.; P. Taylor, 27. 48.; Haddan, 27.; Jackson, 81.; Waddell, 81.; Beecher, 82.; Rennie, 28.; Hunt, 29.; Carpenter, 30. 76.; Berry, 31.; Wimshurst, 31. 73.; Blaxland, 32.; Napier, 33.; Beard, 82.; Joest, 33.; Biram, 34.; Hamer, 35.; Dundonald, Earl of, 35.; Sunderland, 36.; Walker, 36.; Galloway, 37.; Maudslay, 37. 47. 57.; Hodgson, 38.; Fairbairn, (mode of driving the screw), 41.; Hays, 41. 44.; Rosenborg, 42.; Beadon, 42. 75.; Forret, 43.; Oxley, 44.; Parkhurst, 44.; Penn (engines for driving), 45.; Seaward, 46.; Templeton, 49.; Montgomery, 49.; Buchanan (swivelling propeller, 50.; Henwood (arrangement of rudder and propeller), 51.; Macintosh, (flexible propeller), 52.; Stow, 55.; Poole ("Boomerang" propeller), 58.; Beale bird's wing propeller), 58.; Pim (screw at bow and stern), 59.; Hick and Gaitrix, 60.; Dugdale and Birch, 61.; Campbell, 62.; Griffiths, 65.; Buckwell and Apsey, 67.; Heindryckx (flexible propeller), 67.; Tucker, 68.; Phipps (moveable screw), 69.; Malo, 71.; Beattie, 72.; Baldwin, 73.
Screw propellers, comparative merits of different kinds of, 131.; experiments with "Rattler," "Dwarf," "Minx," and "Pelican," to test various kinds of, 131.; screws tried in "Rattler," 133.; screws tried in "Dwarf," 134.; screws tried in "Minx," 136.; screws tried in "Pelican," 139.; diameters of screws tried in "Pelican" increase in geometrical progression, 139.; slip found to increase with the pitch, and with the reduction of the length of screw, 140.; large screws better than small, 141.; large screws may have a coarser pitch than small, 141.; large screws may be shorter than small, 141.; best proportions of screws tried, 141.; pitch should vary with number of blades, 142. 158.; influence of increasing pitch, 159. Practical introduction of Smith's experiments in 1836, 84.; Smith proceeded in his experimental boat to sea, 85.; the "Archimedes" in 1838, 85.; voyages of "Archimedes," 86.; construction of the "Rattler," 87.; adoption of the screw for the service of the navy, 87.; Ericsson builds the "Francis B. Ogden," 88.; the "Novelty," 88.; the "Robert F. Stockton," 89.; the "Princeton," 89.; principle of the thrust not influenced by the diameter of the screw, as with a given pitch, whether the diameter is large or small, the thrust will be the same, 103.; in a screw of small diameter there will be more slip, 103.; configuration and proportions of, 106.; positive and negative slip of, 107.; centrifugal action of, 110.; comparative efficacy of screw and paddles, 114. 119.; proper proportions of, whether with two, four, or six blades, 161. 241.; example of the application of these proportions to a practical case, 163.; a fine pitch best for heavy loads, 165.; benefits of sinking the screw deep in the water, 165.; speed of vessel should influence proportions of screw, 167.; action of sails virtually increase the diameter, 167.; mode of enabling the screw to propel effectively head to wind, 177.; two screws better than one, 177.
Screw and paddles combined, 228.
Screw and paddle steamers on the Atlantic, Appendix, xxvi.
Screw shaft, mode of forming at stern, 221, 222.
Screw vessels, Newton's configuration of, 71.; towing or tractive powers of screw vessels, 117. 121.
Screw vessels with full power, 169.; with auxiliary power, 180.; speed realized by, 189.; screw vessels on canals, 194.
Screw vessels of the navy, dimensions and

performance of, App. i. to iv.; history of introduction of, App. xxxi.
Screw vessels, cost of conveyance by, 183, 184. 187.
"Seahorse," engines of, 209.
Seaward, screw propeller by, 46.; engines of "Termagant" and "Euphrates" by, 204.; engines of the "Conflict" by, 209.; engines of the "Minx" by, 212.
Seistan, windmills used in, 2.
"Sentinelle," engines of, 206.
Shaft for screw, mode of forming at stern, 221, 222.
Shaking or twisting of stern of screw vessels, cause of, 166.
Shallow water, vessels plying in very difficult to propel, 105. 243.
"Sharkie," engines of, 204.
Ships, sails of, Hooke's suggestions respecting, 4.; Hooke's instrument for determining the way of a ship at sea, the present patent log, 6.; manner in which the sails act in propelling, 100.
Ships of wood and iron, comparative advantages of, 191. App. xxxiv.; proposed improvements in construction of, 192.
Shorter, screw propeller by, 11.
"Simoom," engines of, 207.
Slip of the screw will be greater as the diameter of the screw is made less, 103.; or as the resistance of the vessel is made greater, 117. 141. 151.; positive and negative slip, 107.; explanation of the origin of negative slip, 108. 172.; slip increases with an increase of the pitch and with a diminution of the length of screw, 140.; law of variation, 150, 151.; slip nearly the same in any given vessel at all velocities, 148.; curves of slip, 157.; two kinds of positive slip, lateral and retrogressive, 172.; slip diminished by increasing immersion of screw, 172.
Smeaton demonstrates the fallacies of mathematicians respecting momentum, 96.
Specification of screw steamer "Water Witch," App. xxxix.
Smith, F. P., screw propeller by, 21.; practical introduction of the screw mainly owing to his perseverance, 83.; constructs the "Archimedes," 85.; comparison of his achievements with those of Ericsson, 90.; screws exhibited by, at the Great Exhibition, 91.; performance of his screw in the "Rattler," 133.
Smith, Benjamin M., of America, screw propeller by, 78.
Smith, Capt., screw propeller by, 26.
Smith, J. L., twin stern steamer, 80.
Smith and Rodger, engines of the "European" by, 206.
Smoke-jack, substantially a small windmill, 2.
Speed produced by increasing the power of a vessel varies nearly as the cube root of the increased power, 105. 178.; speed of the vessel should influence diameter of screw, 167.; increase of speed attainable in large vessels, 179.; mode of predicating speed, 141.; influence of form and size of hull on speed, 141.
Stern of screw vessels, uneasy motion in, and cause of, 166.
Stern stuffing-box, 220.
Stevens, screw propeller by, 13.
Stothert and Slaughter, screw engines by, 210.
Stow, partially immersed screw propeller by, 55.
Stuffing box at stern of vessel, mode of forming, 220.
Sturdee, twin stern steamer by, 76.
Steinman tries Blaxland's screw in the "Rattler," 133.
Sunderland, screw propeller by, 36.; performance of his screw in the "Rattler," 133.
"Swallow," dimensions of, 113.

Taplin, telescope chimney by, 225.
Taylor, screw propeller by, 25. 27. 48.
Telescope chimnies, 226.
Templeton, screw propeller by, 49.
"Termagant" steam frigate, 169. 204.
Theal, screw propeller by, 80.
Thompson and Wright, screw propeller by, 48.
Thomson, engines of the "Bordeaux" by, 205.; engines of the "Frankfort" by, 210.
Thrust of the screw with any given pitch will be the same whether the diameter be large or small, 103.; varies with the pitch, 164. 239.; theoretical thrust, 174.; thrust in the "Dwarf," 175.; in the "Minx," 176.
Thrust of the screw, mode of receiving in the "Correo," 219.; mode used by Messrs. Penn, 220.
Tod and Macgregor, engines of the "City of Glasgow," "City of Manchester," and "Glasgow" by, 205.
Toogood, T., proposal for propelling ships in 1661, by forcing water through the bottom, 3.
Towing or tractive powers of screw and paddle vessels, 117. 121.; suggestion of the cause of the superior tractive power of screw vessels, 122.
Tredgold suggests increasing pitch for screws in 1827, 18.
Trevithick, screw propeller by, 14.
Tucker's mode of attaching the screw propeller, 68.
Twin stern steamer, 75, 76. 80.

Utilization or efficiency, expression of, 140. 143. 145. 154. 157. 159, 160, 161.

Ventilation, 226.
"Vulcan," engines of, 209.

Waddell, experiment in screw propelling by, 81.
Walker, screw propeller by, 36.
"Wasp," engines of, 214.
Water resistance of bodies moving in water, 95.; *see also* Fluid resistance.
"Widgeon" tried against the "Archimedes," 113.; dimensions of, 113.
"Water-witch" screw steamer, specification of, App. xxxix.
Watt, engines of "Intrepid" and "Pioneer" by, 202.; engines of "Simoom" by, 207.
Whitelaw, direct-acting screw engines by, 213.
Wilder, screw propeller by, 81.
Wilson, screw with increasing or expanding pitch by, 79.
Wimshurst, screw propeller by, 31. 73.
Windmills, described by Hero of Alexandria, 2.; used in ancient times in Seistan, 2.; used by the Romans, 2.; used in Holland, 3.; windmill substantially a screw, 3.; Hooke's horizontal windmill, 4.; Hooke's proposal to make vertical and horizontal windmills work in water, virtually a proposal of feathering paddle wheels and screw propellers, 5.
Woodcroft, screw propeller, by, 20. 39. 74.; performance of his screw in the "Rattler," 133.
Wooden and iron steamers, 192. 243. App. xxxiv.
Worcester, Marquis of, plan for propelling vessels in 1661, 3.

THE END.

LONDON:
SPOTTISWOODES and SHAW,
New street-Square.

00053239

Digitized with financial assistance from the
Government of Maharashtra
on 23 March, 2016